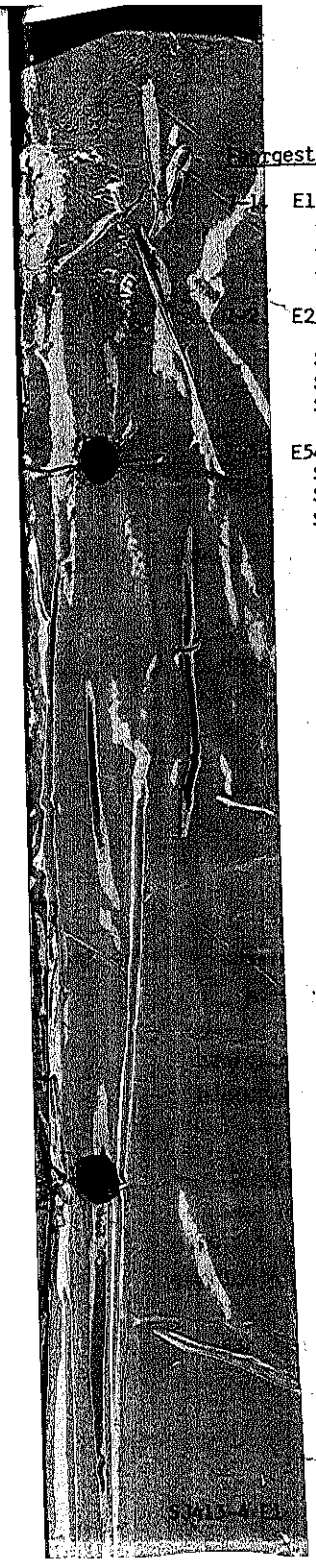

Fahrgestellnummer

E1 (Für Allgemeinen Market)
SJ413Q (Stahl türenausführung).....SJ50-135001~
SJ413W (Lange karosserie typ).....SJ51-110001~
SJ413V (Ganzstahl ausführung).....SJ50-135001~

E2,E6,E15,E16,E17,E18,E19,E22,E25,E34,
E39,E41,E68,E98 (Für Europäischen Market)
SJ413Q (Stahl türenausführung).....JSAOSJ50000170001~
SJ413W (Lange karosserie typ).....JSAOSJ51000115001~
SJ413V (Ganzstahl ausführung).....JSAOSJ50V00140001~

E54
SJ413Q (Stahl türenausführung).....JSAOSJ70000102001~
SJ413W (Lange Karosserie typ).....JSAOSJ71000102001~
SJ413V (ganzstahl ausführung).....JSAOSJ70V00102001~

PREFACIO

Cuando se hace necesario reemplazar las piezas en VEHICULOS de SUZUKI, síravase usar siempre las PEIZAS GENUINAS DE SUZUKI que han pasado una estricta inspección de calidad y rendimiento.

Este catálogo contiene todas las piezas sueltas para SJ413-4(SAMURAI).

INSTRUCCIONES SOBRE EL CATALOGO

1. DIMENSIONES

En este catálogo, las dimensiones de las piezas se indican en unidad de milímetros.

2. ABREVIATURAS

Las abtreviaturas dsadas en este catálogo son como sigue:

AR	: Lo necesario	NT	: Número de dientes
ASSY	: Conjunto	OPT	: Opcional
E.No.	: Número del motor	OS	: Sobremedida
F.No.	: Número del bastidor	STD	: Stándard
d	: Diámetro del material	T	: Espesor
ID	: Diámetro interno	US	: Submedida
OD	: Diámetro externo	W	: Ancho
L	: Longitud	LHD	: Volante a la izquierda
LH	: Lado izquierdo	RHD	: Volante a la derecha
RH	: Lado derecho		

~SJ50-123456:Hasta F.No.SJ50-123456
SJ50-123456~:Desde F.No.SJ50-123456

~G13A-123456:Hasta E.No.G13A-123456
G13A-123456~:Desde E.No.G13A-123456

12 x 34 x 5.6 ·····Los números en la columna de "Observaciones" muestran las dimensiones de las piezas como sigue.
ID OD T(or W,L)

→12345-56781 (No. de pieza) : indica que el número de pieza fue modificado a 12345-56781 y que las nuevas piezas son intercambiables con las anteriores, pero no viceversa.

←12345-56781 (No. de pieza) : indica que las piezas anticuadas y nuevas son intercambiables indistintamente.

El número de la mostrado en "Cantidad" muestra el NOMBRE DE MODELO como se indica al lado derecho.

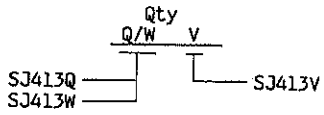

3. PIEZAS INTERNAS DEL CONJUNTO

El número de pieza que cuenta con una marca de período (.) antes del nombre de pieza indica pieza con relación al conjunto.

4. NOTICIA DE MODIFICACION

Remitiremos un boletín de pieza en acasiones de modificación de piezas, incluyendo modificaciones de intercambiabilidad entre las nuevas y viejas piezas.

5. NOTA

5-1. Hay ciertas piezas diferentes de aquellas de modelos de producción entre las piezas de repuesto por razones administrativas y uso común de ellas con los otros modelos.

5-2. En cuanto a las manqueras de goma y tubos de vinilo, sírvase usarlas cortando según la longitud mencionada en el catálogo de piezas o según la longitud realmente requerida por el vehiculo.

5-3. Debe observarse que los dibujos dados en la página de illustración son para la rápida referencia del número de pieza de repuesto, y no para usarse como un manual de armado. En el armado, use el "MANUAL DE SERVICIO DE SUZUKI".

6. CONDIGO DE ESPECIFICACION

Este catálogo contiene las piezas para el modelo diseñado para las siguientes especificación;

Cóndigo de especificación :

E1, E2, E6, E9, E14, E15, E16, E17, E18, E19, E20, E22, E25, E27, E30, E34, E35, E39, E41, E43, E44, E49, E54, E58, E59, E68, E81, E94, E98.

7. NUMERO DE SERIE DEL CUADRO

7-1. E1 (Para mercado General)
SJ413Q (Tipo puerta de acero).....SJ50-135001~
SJ413W (Tipo carrocería).....SJ51-110001~
SJ413V (Tipo cuerpo duro).....SJ50-135001~

7-2. E2,E6,E15,E16,E17,E18,E19,E22,E25,E34,E39,
E41,E68,E98 (Para mercado Europeo)
SJ413Q (Tipo puerta de acero).....JSA0SJ50000170001~
SJ413W (Tipo carrocería).....JSA0SJ51000115001~
SJ413V (Tipo cuerpo duro).....JSA0SJ50V00140001~

7-3. E54
SJ413Q (Tipo puerta de acero).....JSA0SJ70000102001~
SJ413W (Tipo carrocería).....JSA0SJ71000102001~
SJ413V (Tipo cuerpo duro).....JSA0SJ70V00102001~

COLOR CHART
TABLEAU DES COULEURS
CUADRO DE COLORS
FARBTABELLE

COLOR NO. NO DE COULEUR NO.DE COLOR FARBCODE	COLOR DESCRIPTION DESCRIPTION DE COULEUR DESCRIPCIÓN DE COLOR FARBBESCHREIBUNG	COLOR NO. NO DE COULEUR NO.DE COLOR FARBCODE	COLOR DESCRIPTION DESCRIPTION DE COULEUR DESCRIPCIÓN DE COLOR FARBBESCHREIBUNG
001	COLUMBIAN BLUE	2DJ	27G.291
019	BLACK	2DK	24U.291
064	PURE WHITE	2DL	19H.291
07B	FANTASY BLACK	2DM	37T.291
07T	YELLOW (NEW GUINEA)	2HA	26U.25B
09E	HANDSOME GRAY METALLIC	2HL	28M.37E.064
14M	SHINY RED (TAPE)	2HM	28N.37E
162	BLACK(NON-GLOSS)	2HN	718.37E.064
18J	CRYSTAL SILVER METALLIC NO.2	2HP	064.23E.14M
19H	EMERALD GREEN	2HR	38C.23E.14M
2AJ	5HN.5GT	2JM	5HJ,5GT,5MB
2AK	5HP.5GR	2JN	5HK,5GR,5MC
2AL	5HR.5DA	2JP	5HL,5GT
2AM	5HR.5GT	2JR	5HM,5GR
2AN	5HS.5CZ	2JS	07T.291
2AP	5HS.5GR	20V	GRAY METALLIC
2AS	5HJ.5GT	21A	GOLD
2AU	5HK.5GR	21B	ORANGE
2DE	21L.291	21G	KENYA GRAY METALLIC (TAPE)
2DF	07B.291	21L	PERUCHET RED
2DG	38C.291	23E	DARK GRAY
2DH	20V.291	24U	WORCESTER BLUE METALLIC

COLOR CHART
TABLEAU DES COULEURS
CUADRO DE COLORS
FARBTABELLE

COLOR NO. NO DE COULEUR NO. DE COLOR FARBCODE	COLOR DESCRIPTION DESCRIPTION DE COULEUR DESCRIPCIÓN DE COLOR FARBBESCHREIBUNG	COLOR NO. NO DE COULEUR NO. DE COLOR FARBCODE	COLOR DESCRIPTION DESCRIPTION DE COULEUR DESCRIPCIÓN DE COLOR FARBBESCHREIBUNG
25B	GRAISH BEIGE	45R	NEUTRAL GRAY
25B	GRAISH BEIGE	46Z	BLACK
25R	COOL PALE GRAY (TAPE)	48B	SNOW BLACK
26U	SUPERIOR WHITE	5BA	MOCHA BROWN
27G	SAMOA TURQUOISE METAL LIC	5CW	COGNAC BROWN
28M	OCEAN BLUE(TAPE)	5CZ	COGNAC BROWN
28N	CORAL PINK	5DA	BLACK
281	BLACK (NON-GLOSS)	5DD	COGNAC BROWN
29Y	WORCESTER BLUE (TAPE)	5EB	GRAY
291	BLACK (SEMI-GLOSS)	5ES	OFF BLACK
37E	SUPER GRAY	5GP	COGNAC BROWN (MAT)
37T	NOVA BROWN METALLIC	5GR	COGNAC BROWN (FLIGHT CALF)
38C	INVIERNO BLUE METALLI C	5GS	COGNAC BROWN (HEAD RE ST)
382	BLACK	5GT	OFF BLACK (FLIGHT CAL F)
4FK	GRAYISH BEIGE	5GU	OFF BLACK (HEAD REST)
4FL	GRAYISH BEIGE	5HJ	MONARCH GRAY
4GF	GRAYISH BEIGE	5HK	MONARCH BROWN
4KJ	GRAYISH BEIGE	5HL	COLOMBIN BLACK
4KK	GRAYISH BEIGE	5HM	COLOMBIN BROWN
4KW	GRAYISH BEIGE (JERSEY TRICOT)	5HN	GRAY (KP317)
40U	ADVENTURE BLACK	5HP	LIGHT BROWN (KP317)
42A	BLACK (HI CALF)	5HR	GRAY (NO.39)

COLOR CHART
TABLEAU DES COULEURS
CUADRO DE COLORS
FARBTABELLE

COLOR NO. NO DE COULEUR NO. DE COLOR FARBCODE	COLOR DESCRIPTION DESCRIPTION DE COULEUR DESCRIPCIÓN DE COLOR FARBBESCHREIBUNG	COLOR NO. NO DE COULEUR NO. DE COLOR FARBCODE	COLOR DESCRIPTION DESCRIPTION DE COULEUR DESCRIPCIÓN DE COLOR FARBBESCHREIBUNG
5HS	LIGHT BROWN (NO.39)	9YZ	5HK,5HM,5GR,5MC
5HS	LIGHT BROWN (NO.39)		
5JP	OFF BLACK (MAT)		
5JR	OFF BLACK (CARPET)		
5JS	COGNAC BROWN (CARPET)		
5MB	COLOMBIN BLACK (NEW S KIPPER)		
5MC	COLOMBIN BROWN (NEW S KIPPER)		
5ME	WHITE		
5MF	WHITE		
55M	EXCELLENT BLACK		
55P	HARD TOP WHITE		
55R	HARD TOP BLACK		
7BS	21A,21B,42A		
7HS	18J,291		
718	RED (TAPE)		
8CT	09E,25B		
8GS	064,281		
8KJ	26U,291		
8RJ	21G,23E,25R		
8RK	29Y,23E,25R		
9DN	27G,23E,25R		
9YW	5HJ,5HL,5GT,5MB		

MILLIMETER → INCH CONVERSION CHART
TABLEAU DE CONVERSION DE MILLIMETRES → POUCES
CUADRO DE CONVERSION A UNIDAD DE MILIMETRO → PULGADA
MILLIMETER → ZOLL UMRECHNUNGSTABELLE

	0	1	2	3	4	5	6	7	8	9
00	.000	.039	.079	.118	.157	.197	.236	.276	.315	.354
10	.394	.433	.472	.512	.551	.591	.630	.669	.709	.748
20	.787	.827	.866	.906	.945	.984	1.024	1.063	1.102	1.142
30	1.181	1.220	1.260	1.299	1.339	1.378	1.417	1.457	1.496	1.535
40	1.575	1.614	1.654	1.693	1.732	1.772	1.811	1.850	1.890	1.929
50	1.969	2.008	2.047	2.087	2.126	2.165	2.205	2.214	2.283	2.323
60	2.362	2.402	2.441	2.480	2.520	2.559	2.598	2.638	2.677	2.717
70	2.756	2.795	2.835	2.874	2.913	2.953	2.992	3.031	3.071	3.110
80	3.150	3.189	3.228	3.268	3.307	3.346	3.386	3.425	3.465	3.504
90	3.543	3.583	3.622	3.661	3.701	3.740	3.780	3.819	3.858	3.898

How to read
Mode de lecture
Modo de leer
Anleitung

	0	1	2	3	4
00	---	---	---	---	---
10	---	---	---	---	---
20	---	---	---	0.906	---
30	---	---	---	---	---

23 millimeters equal 0.906 inch
23 millimètres égalent 0.906 pouce
23milímetros = 0.906 pulgada
23 millimeter entspricht 0.906 zoll

Contents are subject to change without notice or obligation.

Les matières traitées sont susceptibles d'être modifiées sans préavis obligation de notre part.

El contenido está sujeto a modificaciones sin previo aviso.

Hnderungen vorbehalten.

FIG. 1

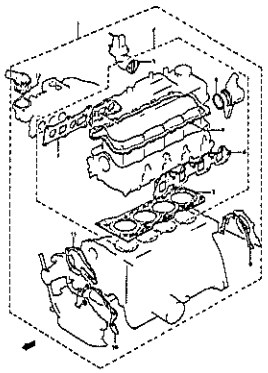

FIG. 2

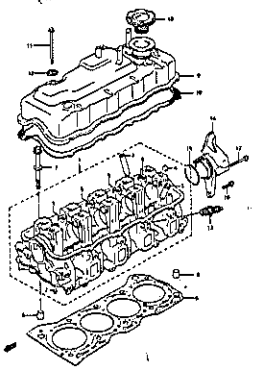

FIG. 3

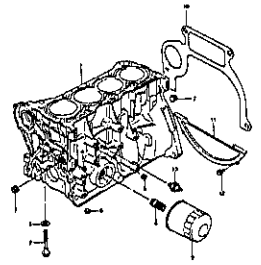

FIG. 4

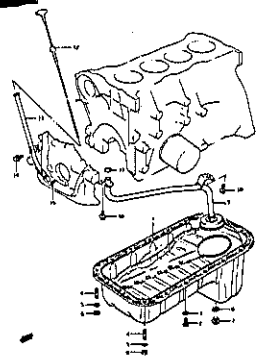

FIG. 5

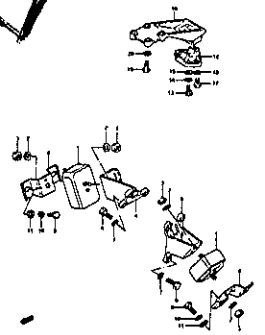

FIG. 6

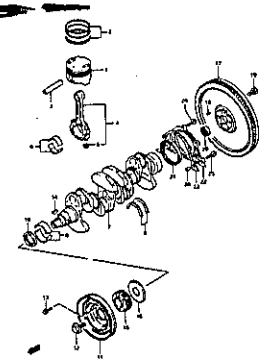

FIG. 7

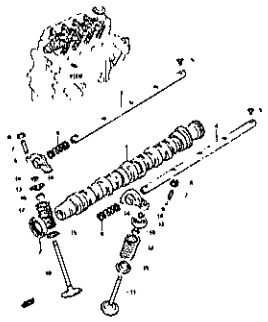

FIG. 8

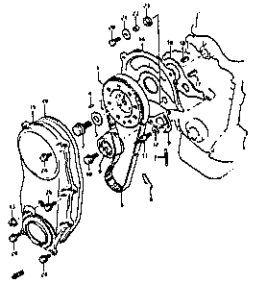

FIG. 9

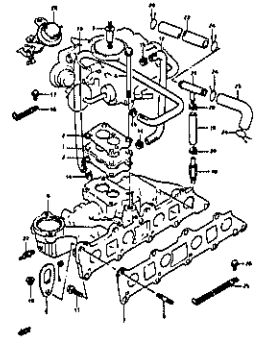

FIG. 10

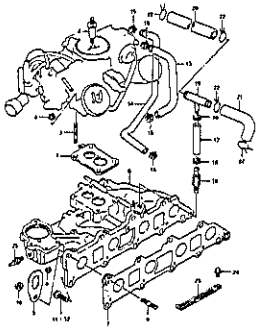

FIG. 11

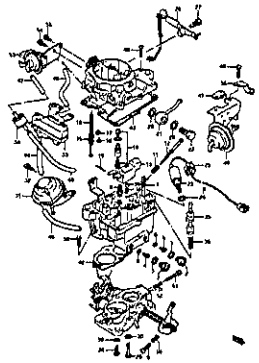

FIG. 12

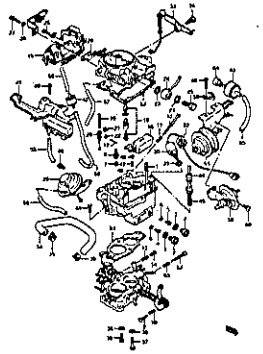

FIG. 13

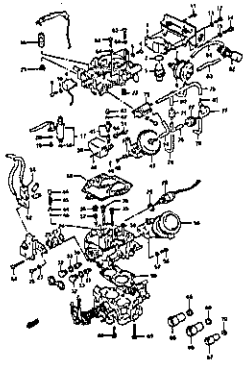

FIG. 14

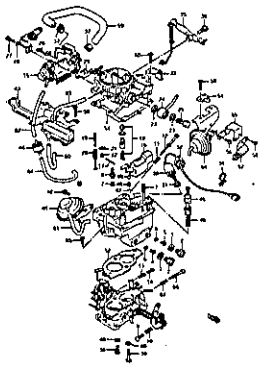

FIG. 15

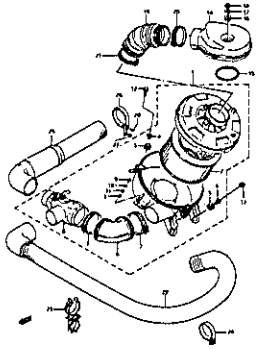

FIG. 16

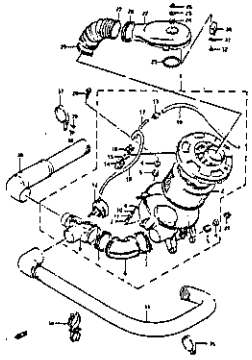

FIG. 17

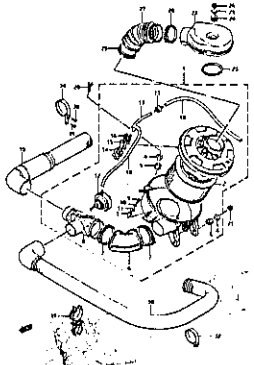

FIG. 18

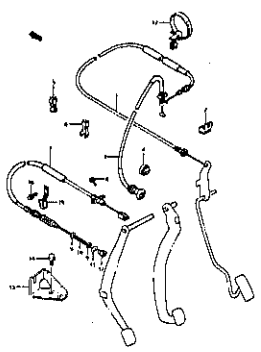

FIG. 19

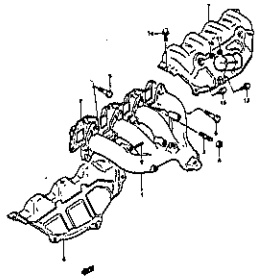

FIG. 20

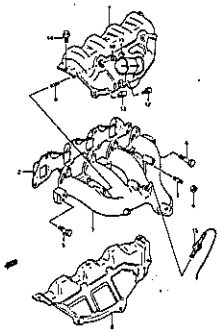

FIG. 21

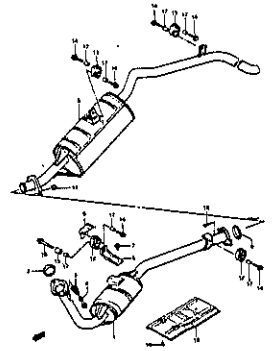

FIG. 22

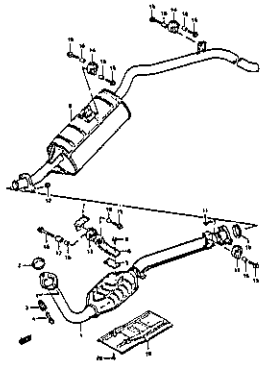

FIG. 23

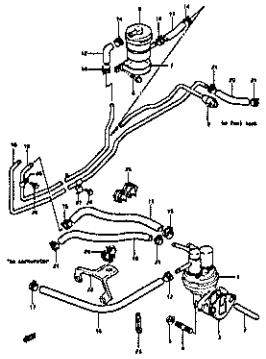

FIG. 24

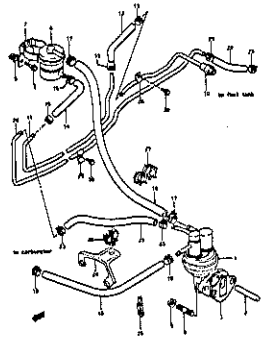

FIG. 25

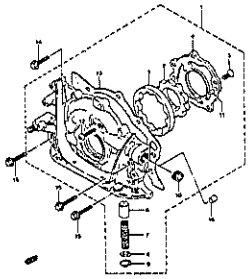

FIG. 26

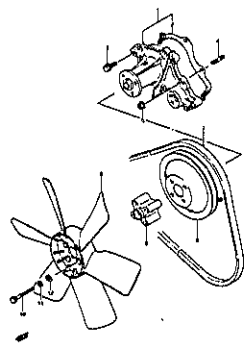

FIG. 27

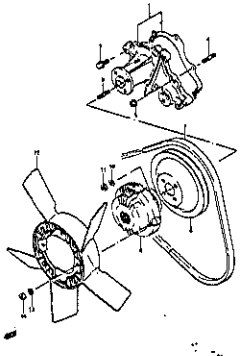

FIG. 28

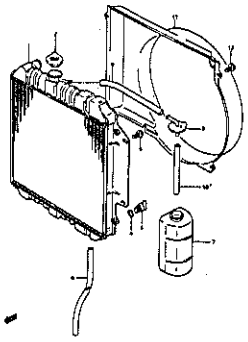

FIG. 29

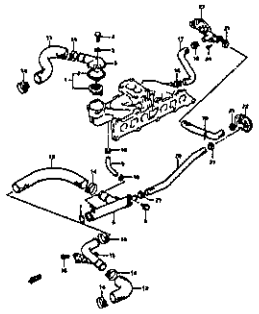

FIG. 30

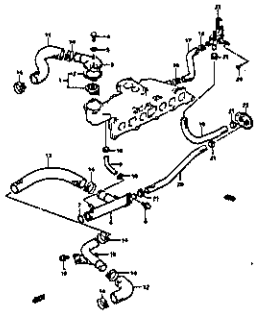

FIG. 31

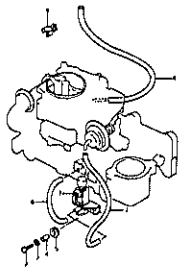

FIG. 32

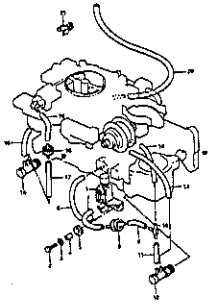

FIG. 33

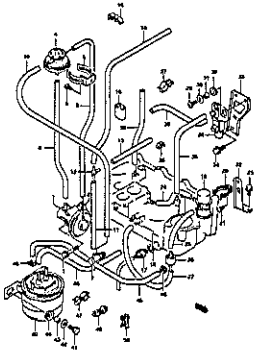

FIG. 34

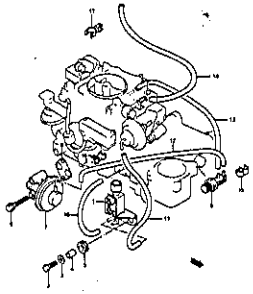

FIG. 35

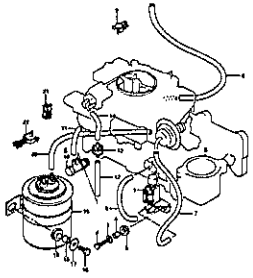

FIG. 36

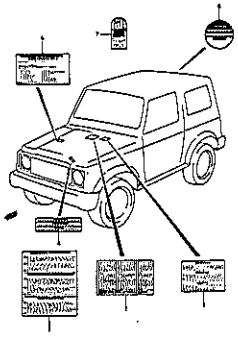

FIG. 37

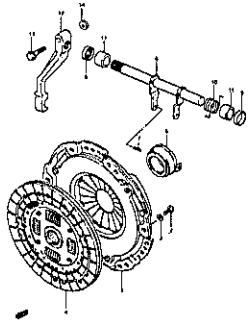

FIG. 38

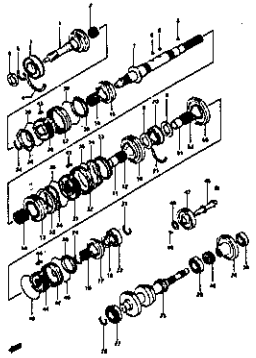

FIG. 39

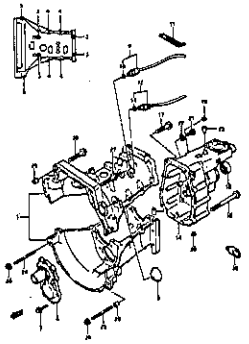

FIG. 40

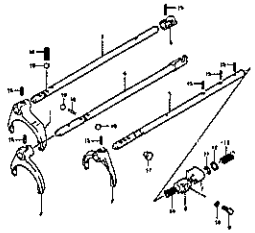

FIG. 41

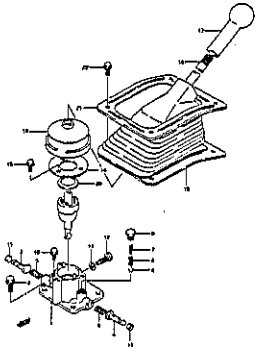

FIG. 42

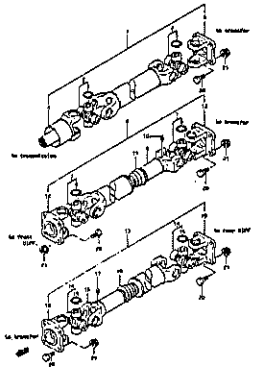

FIG. 43

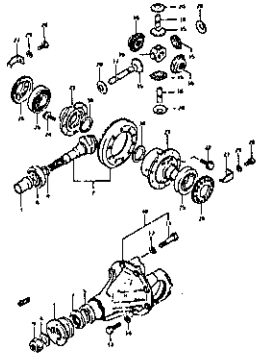

FIG. 44

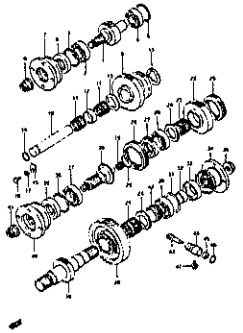

FIG. 45

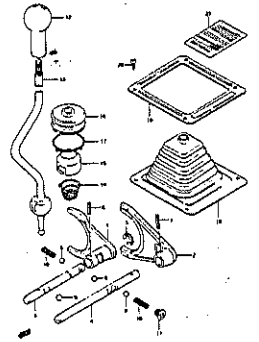

FIG. 46

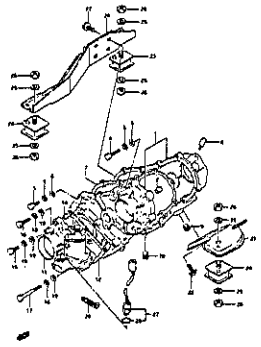

FIG. 47

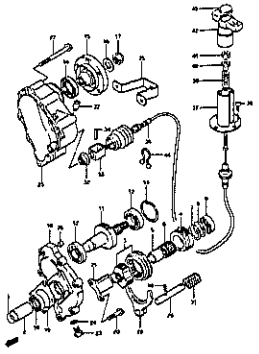

FIG. 48

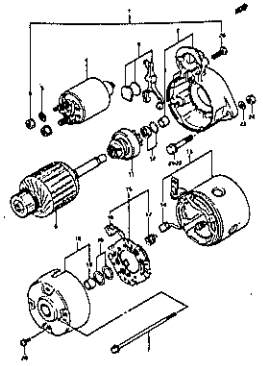

FIG. 49

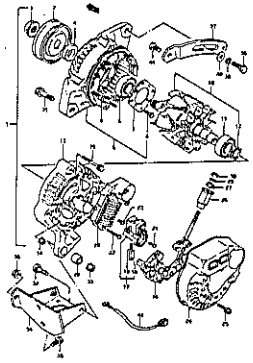

FIG. 50

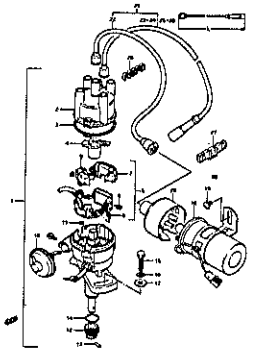

FIG. 51

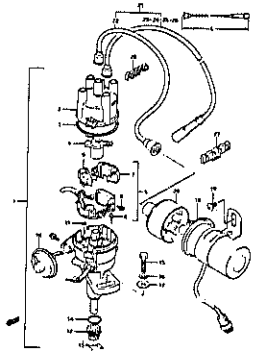

FIG. 52

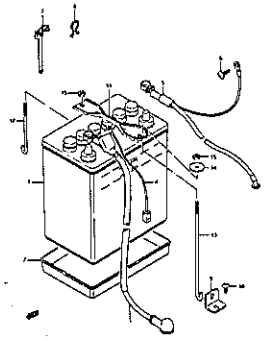

FIG. 53

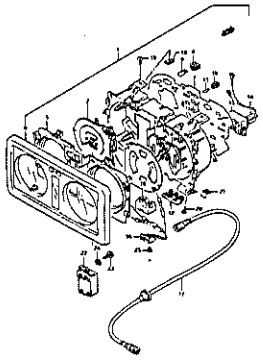

FIG. 54

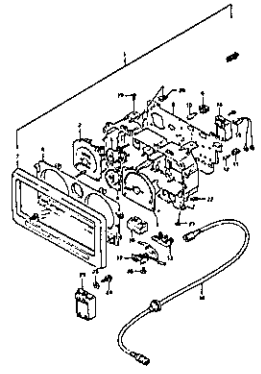

FIG. 55

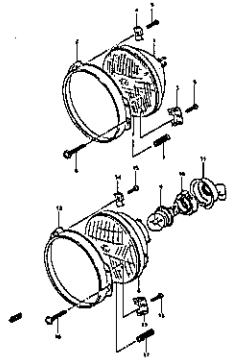

FIG. 56

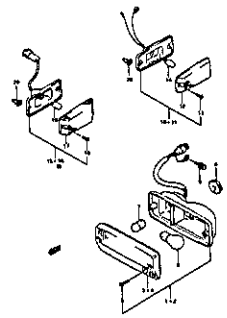

FIG. 57

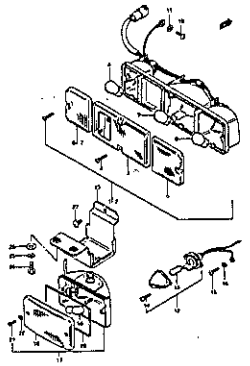

FIG. 58

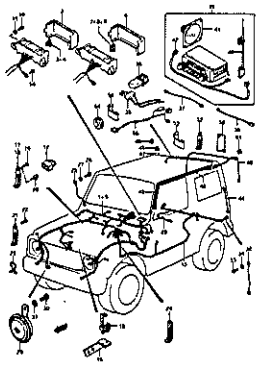

FIG. 59

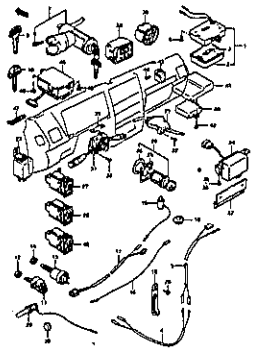

FIG. 60

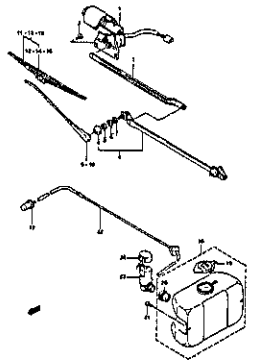

FIG. 61

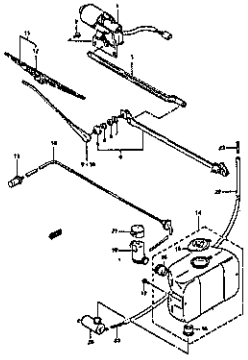

FIG. 62

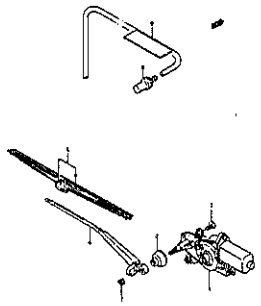

FIG. 63

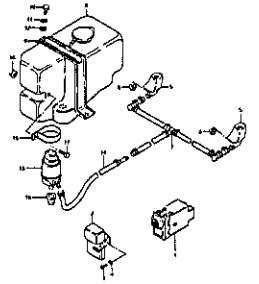

FIG. 64

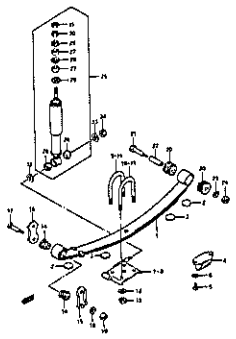

FIG. 65

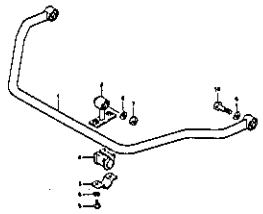

FIG. 66

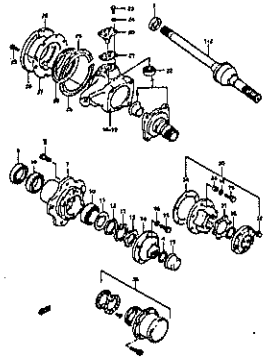

FIG. 67

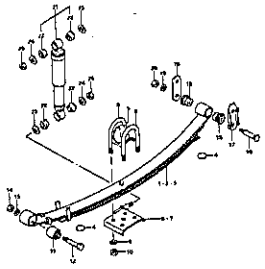

FIG. 68

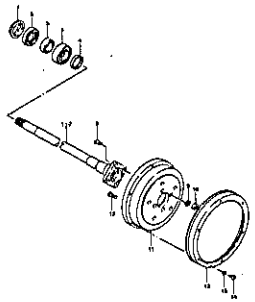

FIG. 69

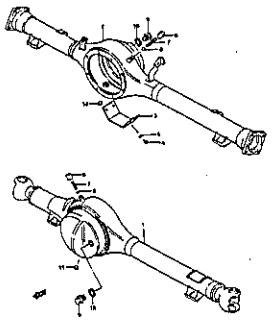

FIG. 70

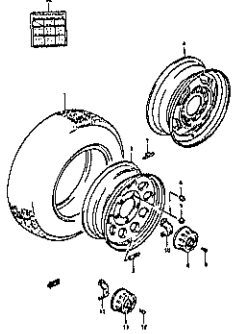

FIG. 71

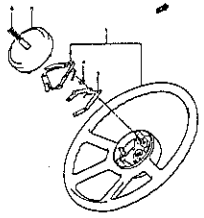

FIG. 72

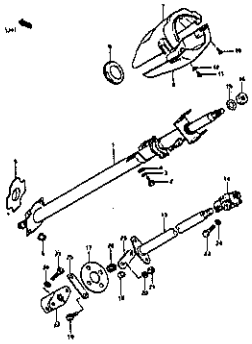

FIG. 73

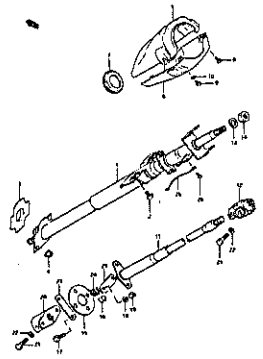

FIG. 74

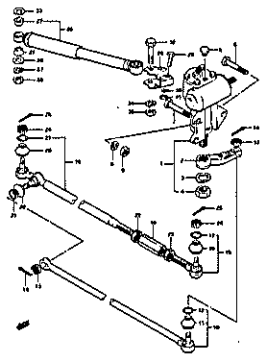

FIG. 75

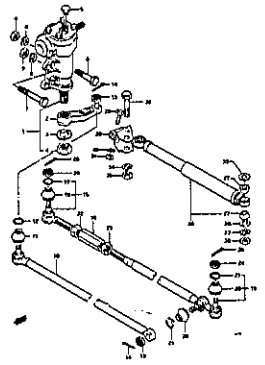

FIG. 76

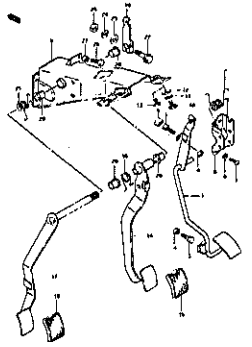

FIG. 77

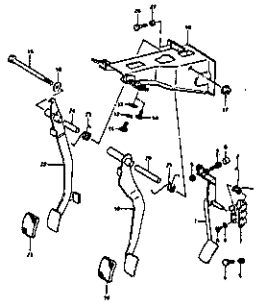

FIG. 78

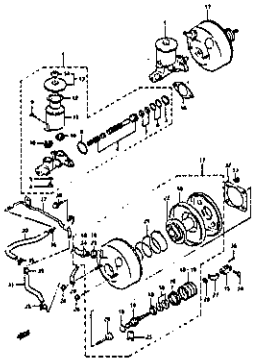

FIG. 79

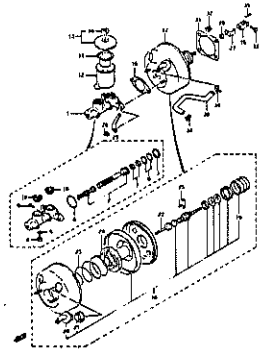

FIG. 80

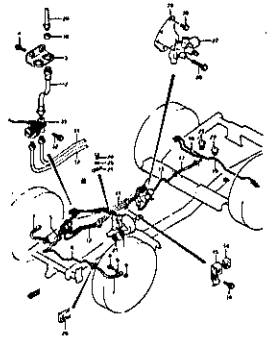

FIG. 81

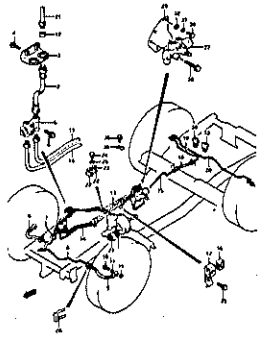

FIG. 82

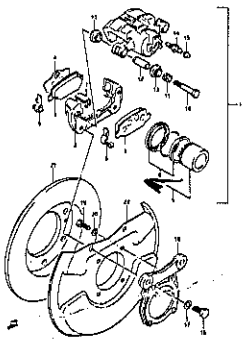

FIG. 83

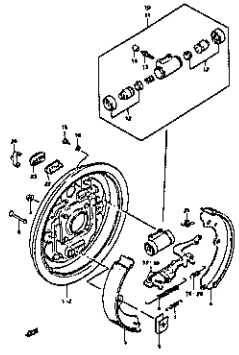

FIG. 84

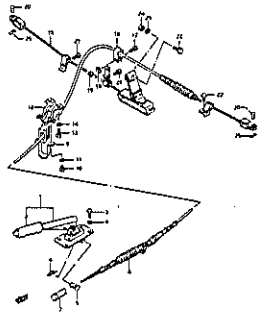

FIG. 85

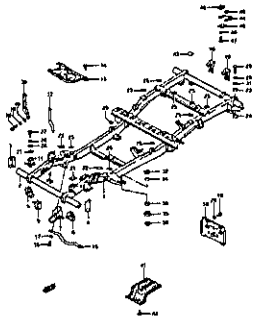

FIG. 86

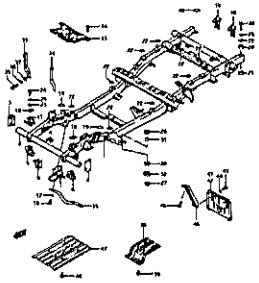

FIG. 87

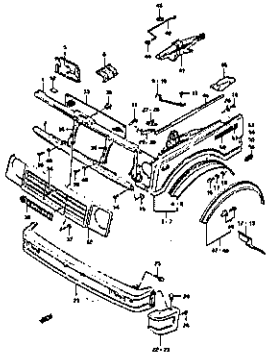

FIG. 88

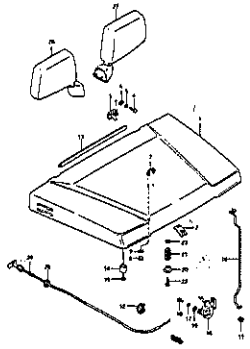

FIG. 89

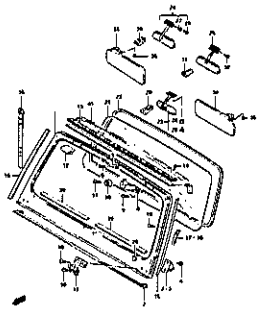

FIG. 90

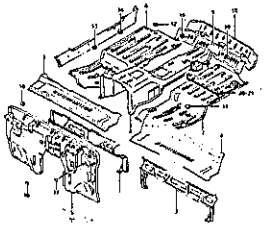

FIG. 91

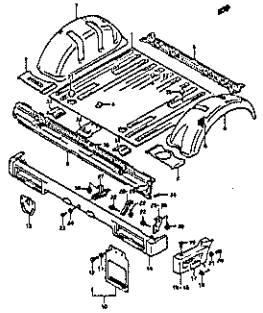

FIG. 92

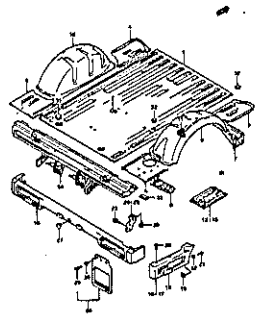

FIG. 93

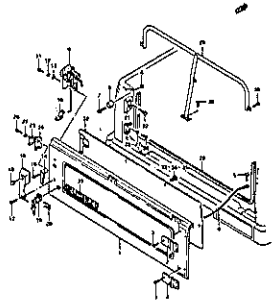

FIG. 94

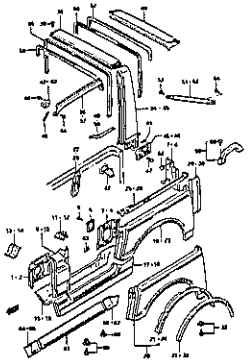

FIG. 95

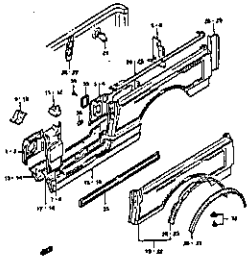

FIG. 96

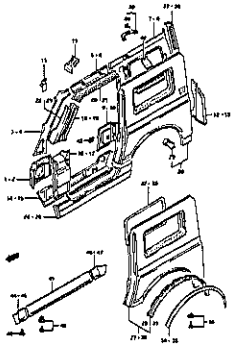

FIG. 97

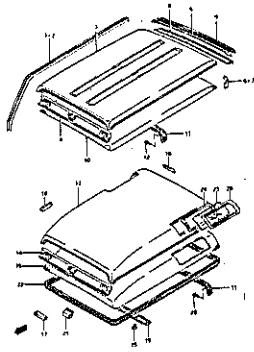

FIG. 98

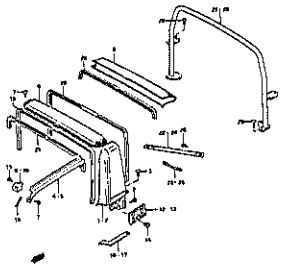

FIG. 99

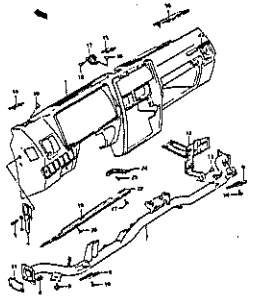

FIG. 100

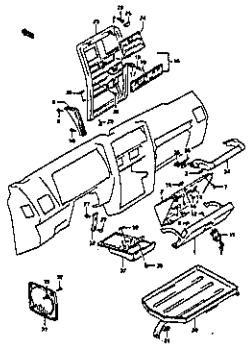

FIG. 101

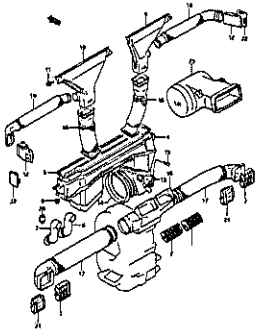

FIG. 102

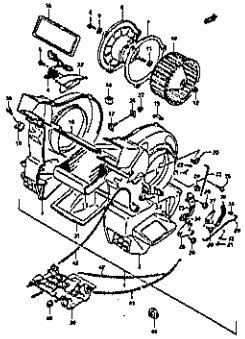

FIG. 103

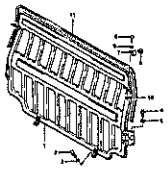

FIG. 104

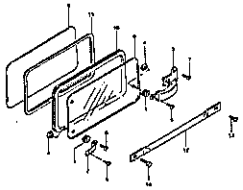

FIG. 105

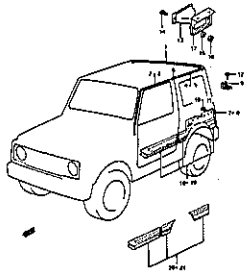

FIG. 106

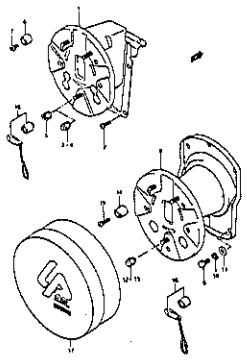

FIG. 107

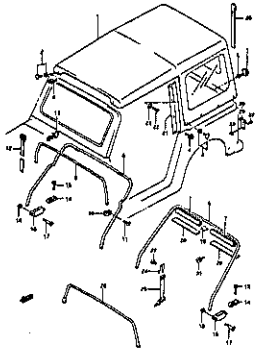

FIG. 108

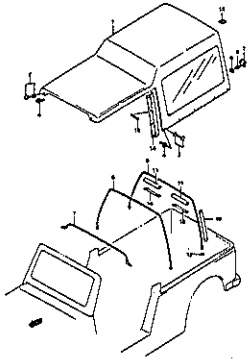

FIG. 109

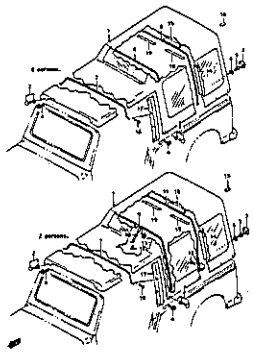

FIG. 110

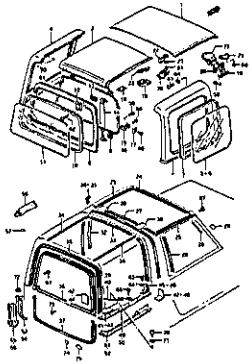

FIG. 111

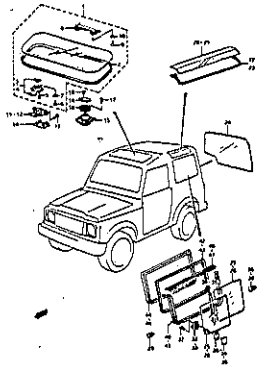

FIG. 112

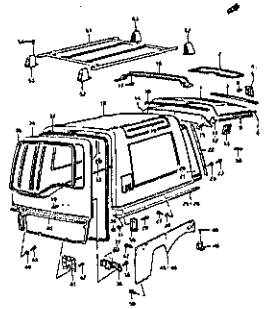

FIG. 113

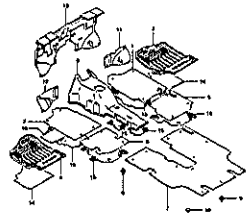

FIG. 114

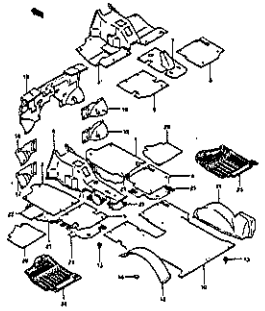

FIG. 115

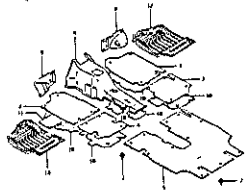

FIG. 116

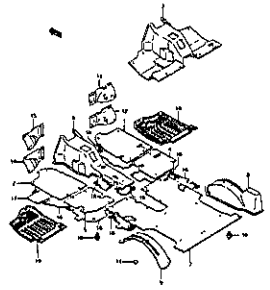

FIG. 117

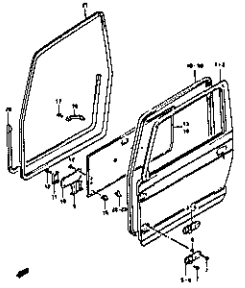

FIG. 118

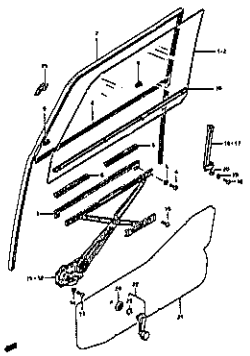

FIG. 119

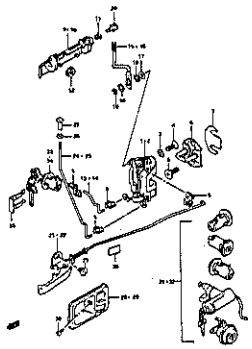

FIG. 120

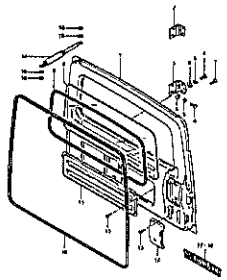

FIG. 121

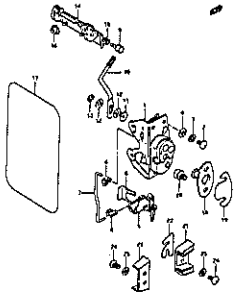

FIG. 122

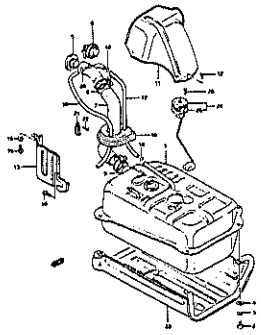

FIG. 123

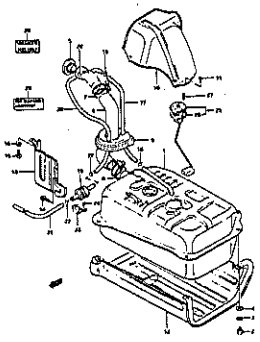

FIG. 124

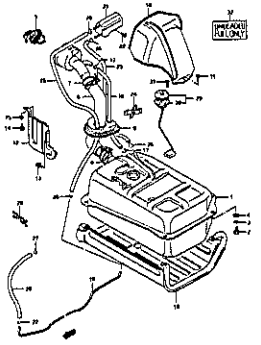

FIG. 125

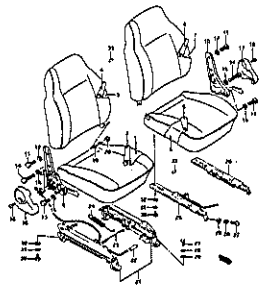

FIG. 126

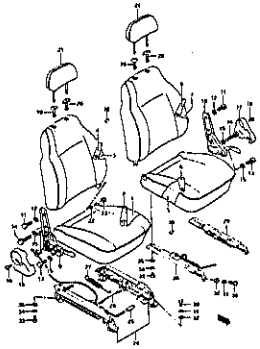

FIG. 127

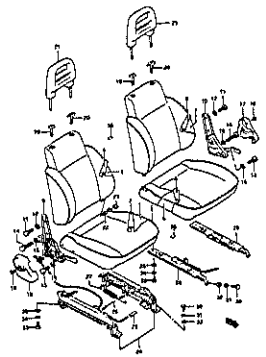

FIG. 128

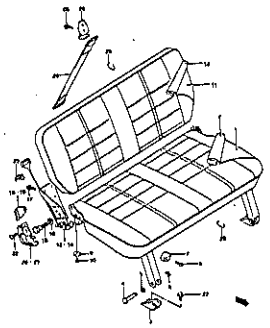

FIG. 129

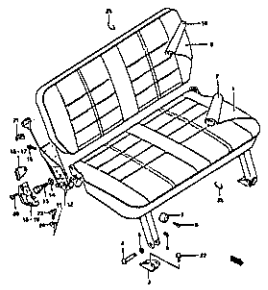

FIG. 130

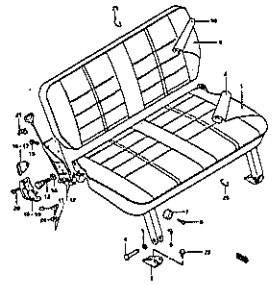

FIG. 131

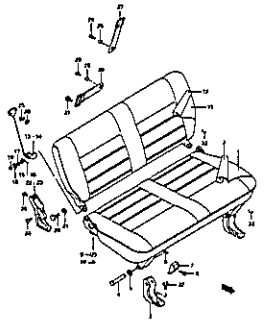

FIG. 132

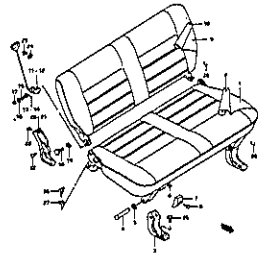

FIG. 133

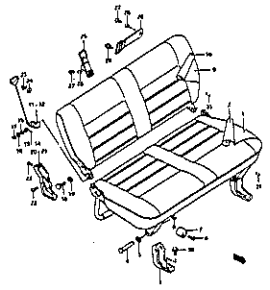

FIG. 134

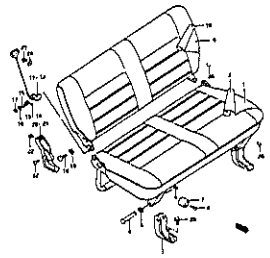

FIG. 135

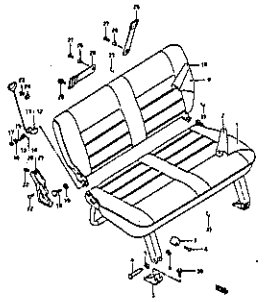

FIG. 136

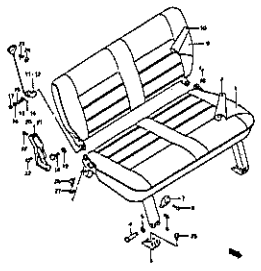

FIG. 137

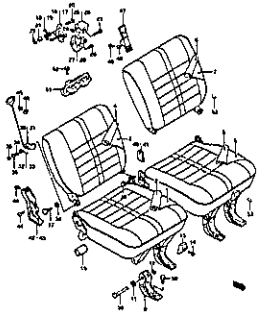

FIG. 138

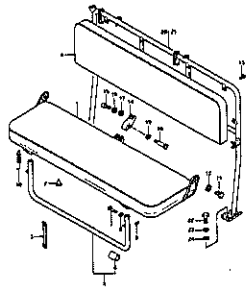

FIG. 139

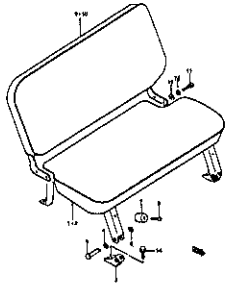

FIG. 140

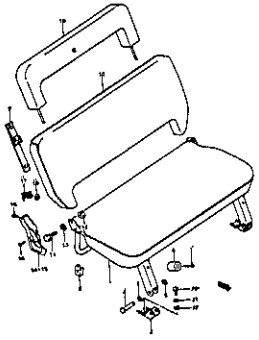

FIG. 141

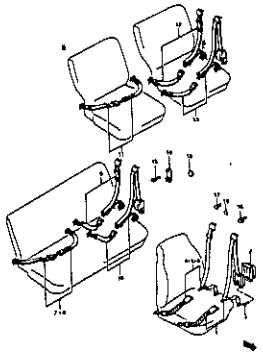

FIG. 142

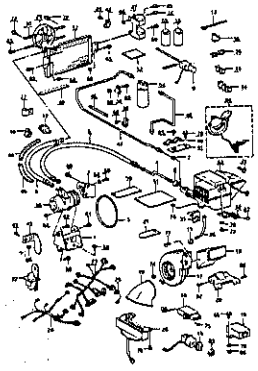

FIG.1

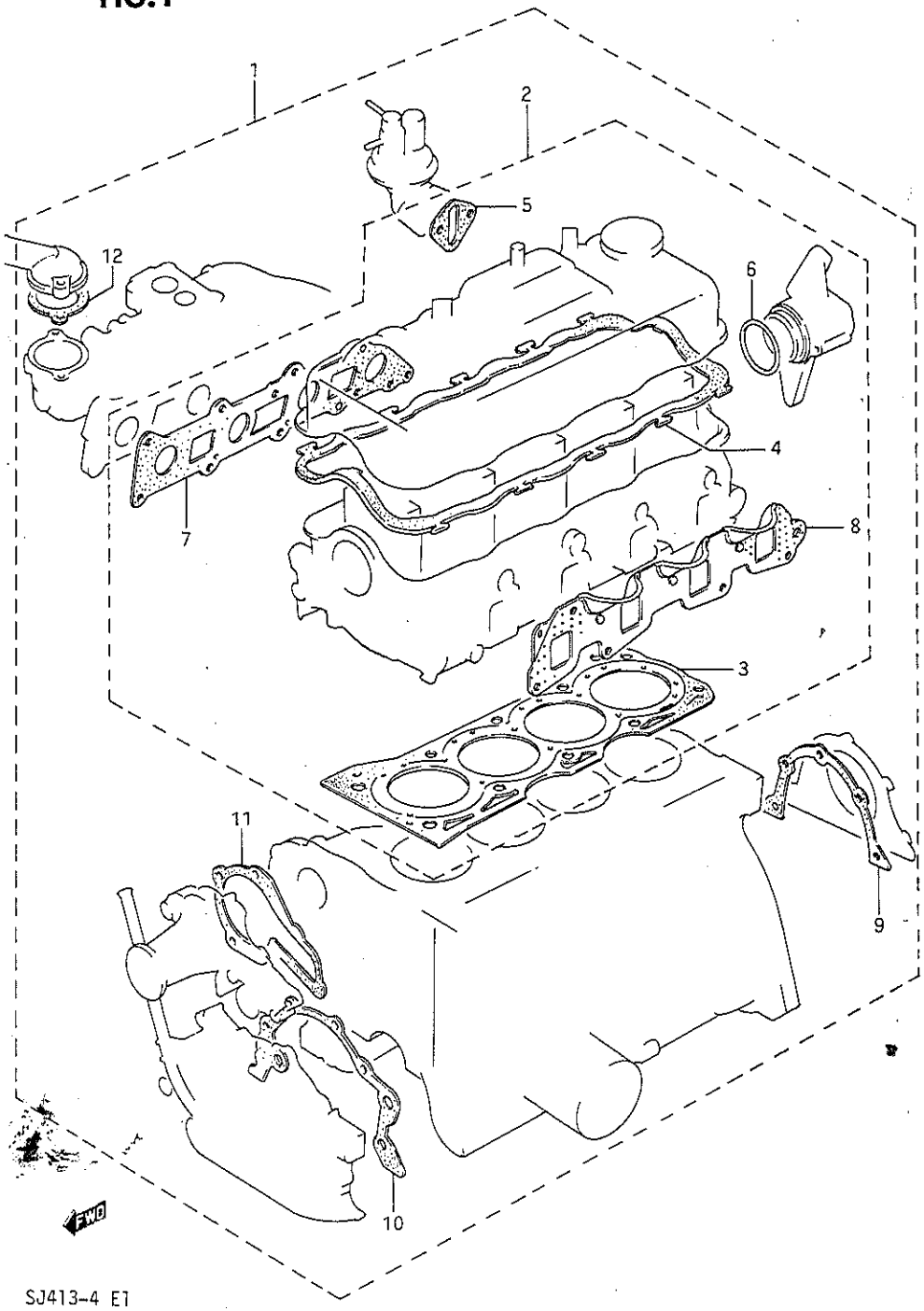

SJ413-4 E1

FIG.1 (1-B- 2) ENGINE GASKET SET

REF.NO.	PART NO.	DESCRIPTION	Q'TY Q/W	Q'TY V	REMARKS
1	11400-83816	GASKET SET, engine	1	1	
2	11100-83814	.GASKET SET, cylinder head	1	1	
3	11141-82611	..GASKET, cylinder head	1	1	
4	11189-82600	..GASKET, cylinder head cover	1	1	
5	15319-73001	..GASKET, fuel pump	1	1	
6	09280-56004	..O RING, distributor case	1	1	
7	13119-82601	..GASKET, intake manifold	1	1	
8	14140-83000	..GASKET, exhaust manifold	1	1	
9	11349-82000	.GASKET, oil seal housing	1	1	
10	16119-82000	.GASKET, oil pump case	1	1	
11	17431-82000	.GASKET, water pump	1	1	
12	17569-80000	.GASKET, thermostat cap	1	1	

11400-83849
39

11400-83839

SJ413-4 F1

FIG.2

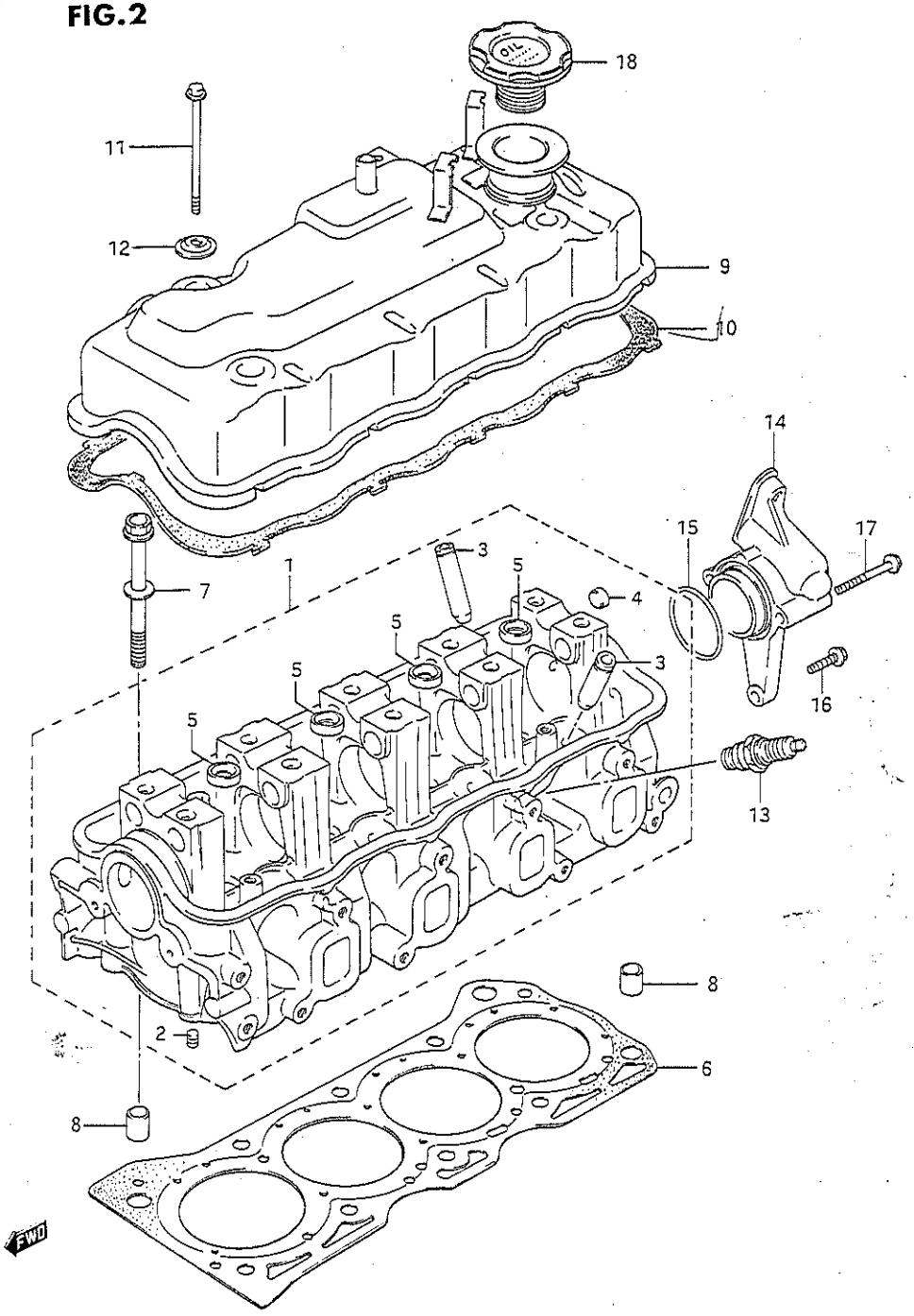

SJ413-4 E1

FIG.2 (1-B- 3) CYLINDER HEAD

REF.NO.	PART NO.	DESCRIPTION	Q'TY Q/W	Q'TY V	REMARKS
1	11110-82602	HEAD, cylinder	1	1	
2	11112-73001	.PLUG, oil venturi	1	1	
3	11115-82000-001	.GUIDE, valve	8	8	
4	09241-12002	.PLUG (OD:12)	1	1	
5	09241-20002	.PLUG (OD:20)	4	4	
6	11141-82611	GASKET, cylinder head	1	1	
7	09116-10118	BOLT (10x94)	10	10	
8	09206-13001	PIN	2	2	
9	11170-83010	COVER, cylinder head	1	1	
10	11189-82600	GASKET, cylinder head cover	1	1	
11	01537-06803	BOLT	4	4	
12	11180-78101	WASHER, head cover seal	4	4	
13-1	09482-00131	PLUG, spark (NGK,BP5ES)	4	4	
13-2	09482-00123	PLUG, spark (ND,W16EX-U)	4	4	
13-3	09482-00377	PLUG, spark (CHAMPION,N9YC)	4	4	
13-4	09482-00155	PLUG, spark (NGK,BPR5ES)	4	4	E2,E6,E15,E16,E17, E18,E19,E22,E25,E30, E34,E35,E39,E54,E68
13-5	09482-00167	PLUG, spark (ND,W16EXR-U)	4	4	E2,E6,E15,E16,E17, E18,E19,E22,E25,E30, E34,E35,E39,E54,E68
14	11161-83000	CASE, distributor	1	1	
15	09280-56004	O RING	1	1	
16	01517-06253	BOLT	2	2	
17	01517-06506	BOLT	1	1	
18	16920-60A00	CAP, oil filler	1	1	

16920-60A01

SJ413-4 E1

FIG.3

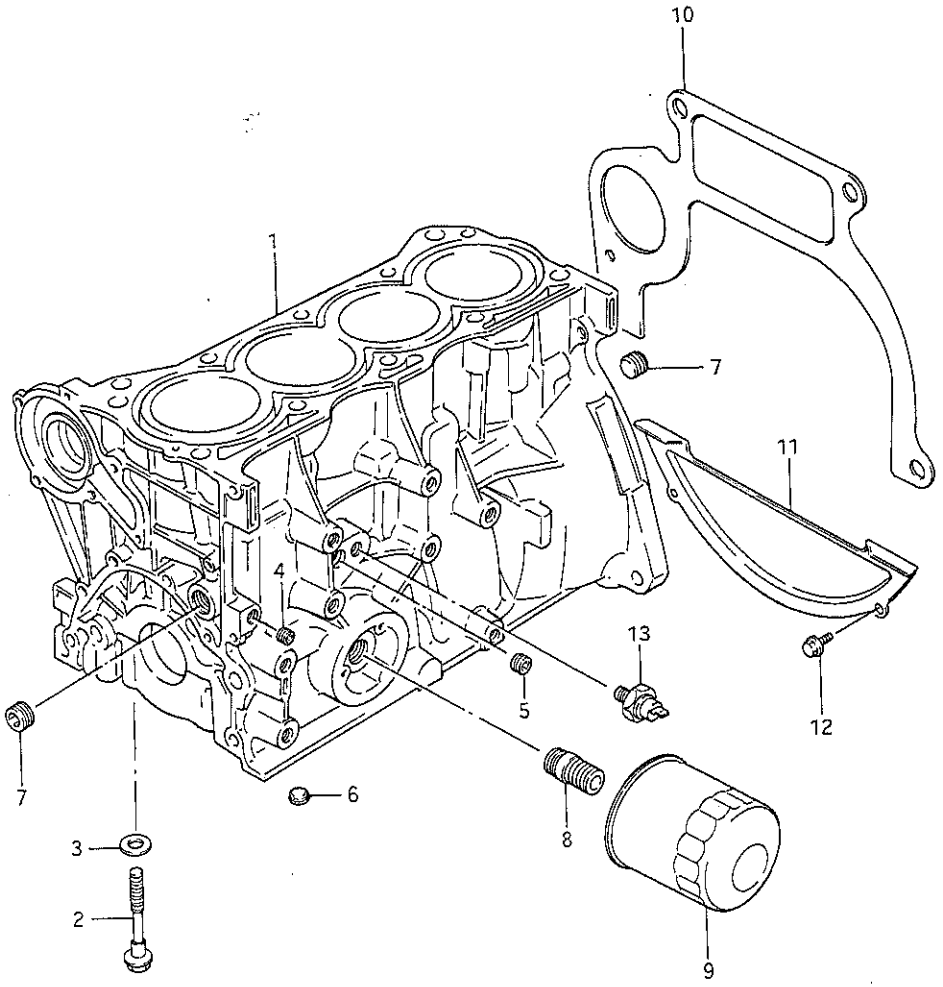

FIG.3 (1-B- 4) CYLINDER BLOCK

REF.NO.	PART NO.	DESCRIPTION	Q'TY Q/W	Q'TY V	REMARKS
1-1	11200-82604	BLOCK ASSY, cylinder	1	1	
1-2	11200-82504	BLOCK ASSY, cylinder	1	1	E54
2	09103-10067	.BOLT (10x70)	10	10	
3	09160-10039	.WASHER (10.5x22x2.3)	10	10	
4	09246-05003	.PLUG, oil galy (1/8PT,H:5.5)	1	1	
5	09246-06002	.PLUG, oil galy (1/4PT,H:7.5)	1	1	
6	09246-06001	.PLUG, oil galy (1/4PT,H:7.5)	1	1	
7	09246-08002	.PLUG, oil galy (3/8PT,H:12)	2	2	
8	11241-73003	STAND, oil filler	1	1	
9	16510-83001	FILTER ASSY, oil	1	1	
10	11311-83000	PLATE, clutch housing upper	1	1	
11	11320-83000	PLATE, clutch housing lower	1	1	
12	01517-06103	BOLT	2	2	
13	37820-82001	SWITCH ASSY, oil pressure	1	1	

FIG.4

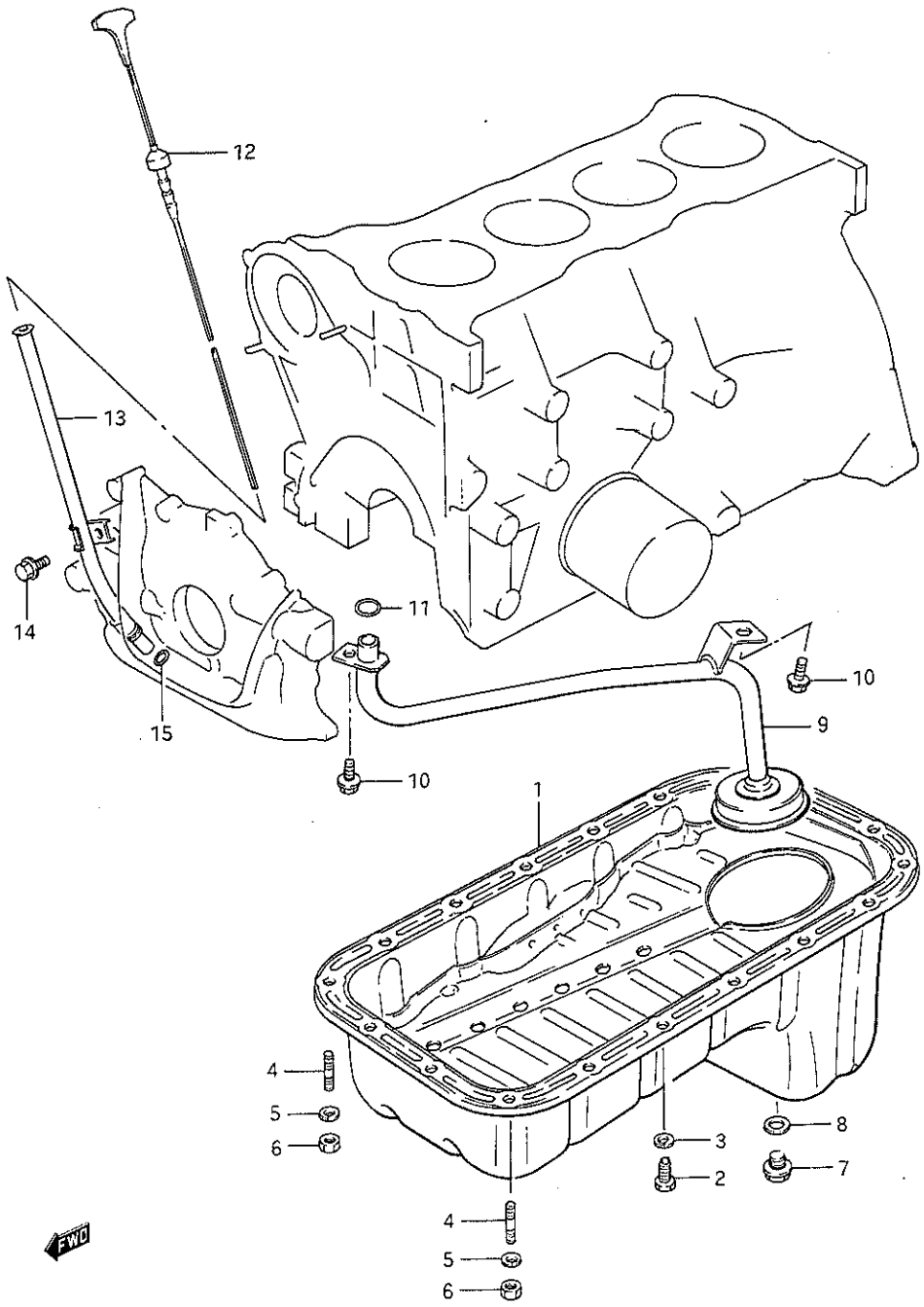

SJ413-4 E1

FIG.4 (1-B- 5) OIL PAN

REF.NO.	PART NO.	DESCRIPTION	Q'TY Q/W	Q'TY V	REMARKS
1	11510-83003	PAN, oil	1	1	
2	09100-06116	BOLT (10x12)	16	16	
3	08321-21063	LOCK WASHER	16	16	
4	01411-06123	STUD BOLT	2	2	
5	08321-21063	LOCK WASHER	2	2	
6	08310-11063	NUT	2	2	
7	09247-14027	PLUG, drain	1	1	
8	09168-14012	GASKET	1	1	
9	16520-83002	STRAINER, oil pump	1	1	
10	01517-06126	BOLT	2	2	
11	09280-14009	O RING	1	1	
12	16910-83000	GAUGE, oil level	1	1	
13	16930-82001	GUIDE, oil level gauge	1	1	
14	01517-06123	BOLT	1	1	
15	09280-10005	O RING	1	1	

SJ413-4 E1

FIG.5

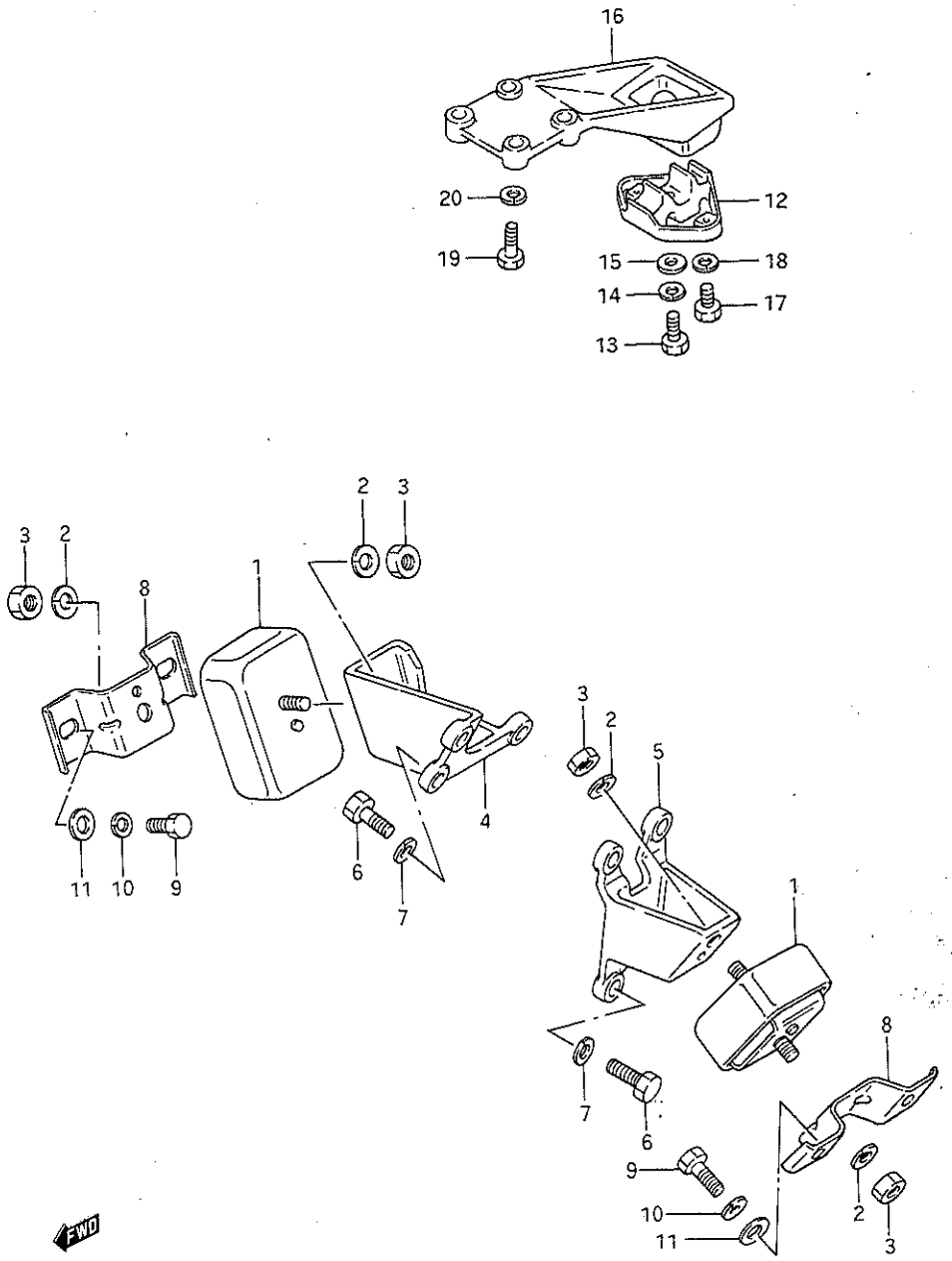

SJ413-4 E1

FIG.5 (1-B- 6) ENGINE MOUNTING

REF.NO.	PART NO.	DESCRIPTION	Q'TY Q/W	Q'TY V	REMARKS
1	11610-80020	MOUNTING, engine front	2	2	
2	08321-31103	LOCK WASHER	4	4	
3	08310-12103	NUT	4	4	
4	11641-83000	BRACKET, front RH	1	1	
5	11651-83000	BRACKET, front LH	1	1	
6	01107-10303	BOLT	7	7	
7	08321-31103	LOCK WASHER	7	7	
8	11661-83000	BRACKET, body side	2	2	
9	01107-10303	BOLT	4	4	
10	08321-31103	LOCK WASHER	4	4	
11	09160-10001	WASHER (10.5x24x2.3)	4	4	
12	11710-80010	MOUNTING, engine rear	1	1	
13	01107-08203	BOLT	1	1	
14	08321-21083	LOCK WASHER	1	1	
15	08322-11083	WASHER	1	1	
16	11741-80010	BRACKET, rear mounting	1	1	
17	01107-08163	BOLT	2	2	
18	08321-21083	LOCK WASHER	2	2	
19	01107-08303	BOLT	4	4	
20	08321-21083	LOCK WASHER	4	4	

SJ413-4 E1

SJ413 G13

FIG.6

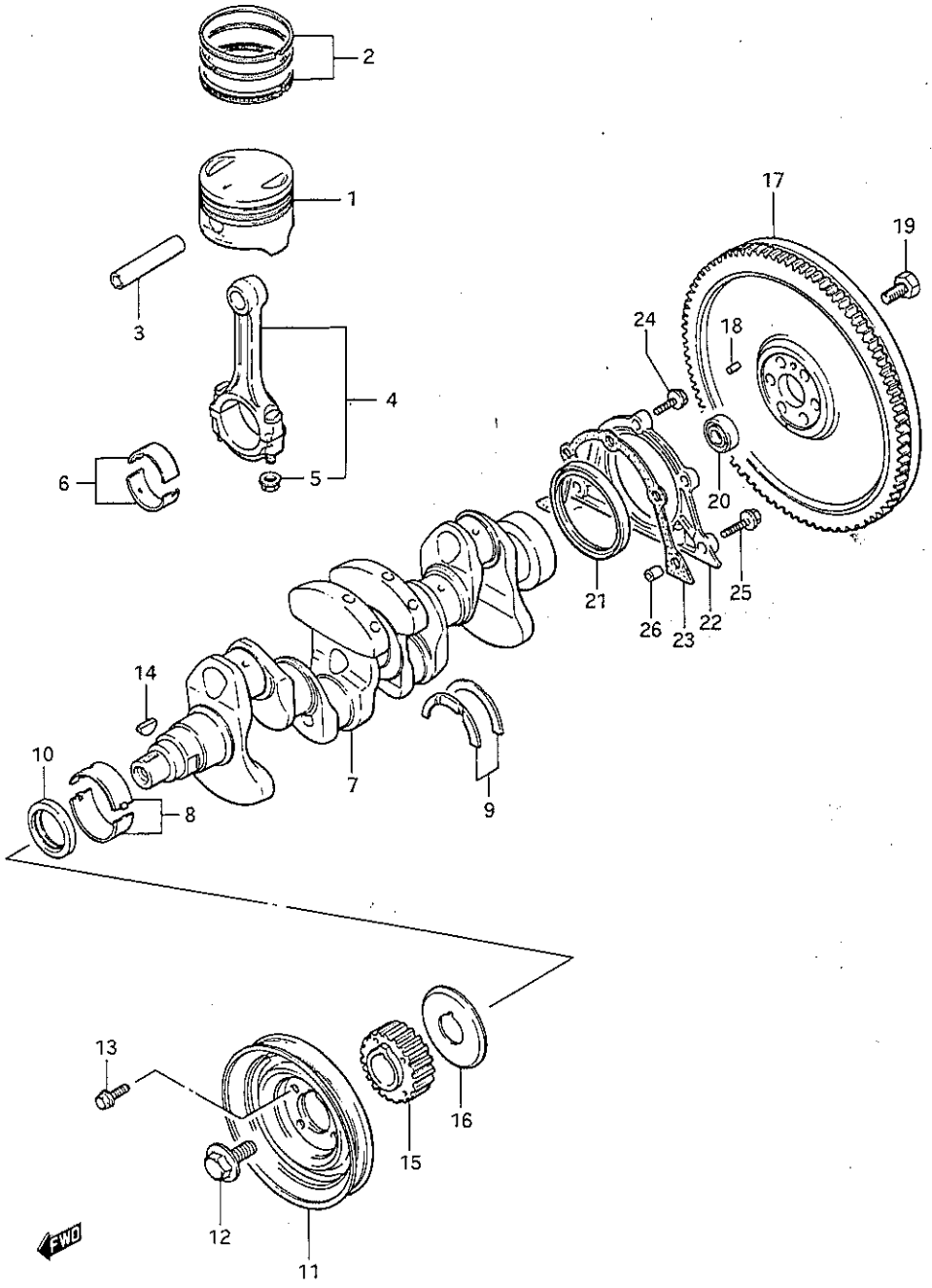

FIG.6 (1-B- 7) CRANKSHAFT

REF.NO.	PART NO.	DESCRIPTION	Q'TY Q/W	Q'TY V	REMARKS
1-1	12111-83000-0A0	PISTON (STD,MARK 1)	4	4	
1-2	12111-83000-0B0	PISTON (STD,MARK 2)	4	4	
1-3	12111-82010-0A0	PISTON (STD,MARK 1)	4	4	E54
1-4	12111-82010-0B0	PISTON (STD,MARK 2)	4	4	E54
1-5	12111-83000-025	PISTON (OS:0.25)	4	4	
1-6	12111-82010-025	PISTON (OS:0.25)	4	4	E54
1-7	12111-83000-050	PISTON (OS:0.5)	4	4	
1-8	12111-82010-050	PISTON (OS:0.5)	4	4	E54
2-1	12140-82051	RING SET, piston (STD)	4	4	
2-2	12140-82051-025	RING SET, piston (OS:0.25)	4	4	
2-3	12140-82051-050	RING SET, piston (OS:0.5)	4	4	
3	12151-82000	PIN, piston	4	4	
4	12160-82000	ROD ASSY, connecting	4	4	
5	09159-08033	NUT	8	8	
6-1	12100-82810	BEARING SET, connecting (STD,T:1.5)	4	4	
6-2	12100-82810-025	BEARING SET, connecting (US:0.25,T:1.625)	4	4	
7-1	12221-82600	CRANKSHAFT	1	1	
7-2	12220-82501	CRANKSHAFT	1	1	E54
8-1	12340-82000-0A0	BEARING SET, crankshaft (STD,T:2,Green)	5	5	
8-2	12340-82000-0B0	BEARING SET, crankshaft (STD,T:2,Black)	5	5	
8-3	12340-82000-0C0	BEARING SET, crankshaft (STD,T:2,Non Collor)	5	5	
8-4	12340-82000-0D0	BEARING SET, crankshaft (STD,T:2,Yellow)	5	5	
8-5	12340-82000-0E0	BEARING SET, crankshaft (STD,T:2,Blue)	5	5	
8-6	12300-82810-0AA	BEARING SET, crankshaft (US:0.25,T:2.125,Red/Green)	5	5	
8-7	12300-82810-0BA	BEARING SET, crankshaft (US:0.25,T:2.125,Red/Black)	5	5	
8-8	12300-82810-0CA	BEARING SET, crankshaft (US:0.25,T:2.125,Red)	5	5	
8-9	12300-82810-0DA	BEARING SET, crankshaft (US:0.25,T:2.125,Red/Yellow)	5	5	
8-10	12300-82810-0EA	BEARING SET, crankshaft (US:0.25,T:2.125,Red/Blue)	5	5	

12140-82X30
-050

SJ413-4 E1

FIG.6

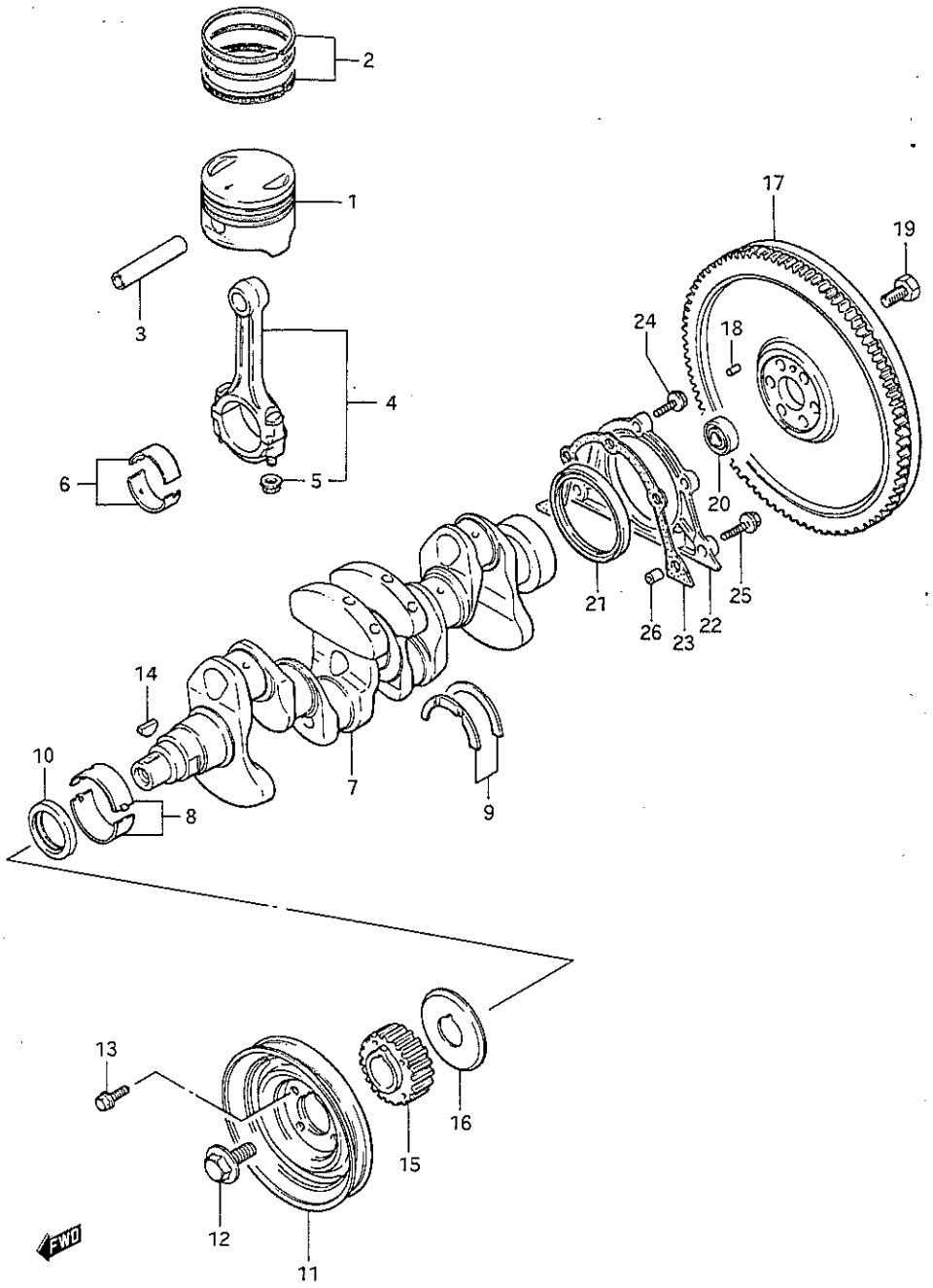

FIG.6 (1-B- 8) CRANKSHAFT

REF.NO.	PART NO.	DESCRIPTION	Q'TY Q/W	Q'TY V	REMARKS
9-1	12300-82820	BEARING SET, crank thrust (STD,T:2.5)	1	1	
9-2	12300-82820-012	BEARING SET, crank thrust (OS:0.125,T:2.563)	1	1	
10	09283-32026	SEAL, front oil (32x47x6)	1	1	
11-1	12610-82000	PULLEY, crankshaft	1	1	N/air con
11-2	12611-83000	PULLEY, crankshaft	1	1	W/air con
12	09103-12008	BOLT (12x30)	1	1	
13	01517-06203	BOLT	4	4	
14	08341-31059	KEY	1	1	
15	12631-82000	PULLEY, crank timing belt	1	1	
16	12635-78400	GUIDE, timing belt	1	1	
17	12620-83000	FLYWHEEL (NT:100)	1	1	
18	04221-06129	PIN	1	1	
19	09103-10068	BOLT (10x18.5)	6	6	
20	08133-62007	BEARING, input shaft	1	1	
21	09283-68001	SEAL, rear oil (68x86x8)	1	1	
22	11341-82000	HOUSING, oil seal	1	1	
23	11349-82000	GASKET, oil seal housing	1	1	
24	01517-06203	BOLT	3	3	
25	01517-06253	BOLT	2	2	
26	04211-09109	PIN	2	2	

FIG.7

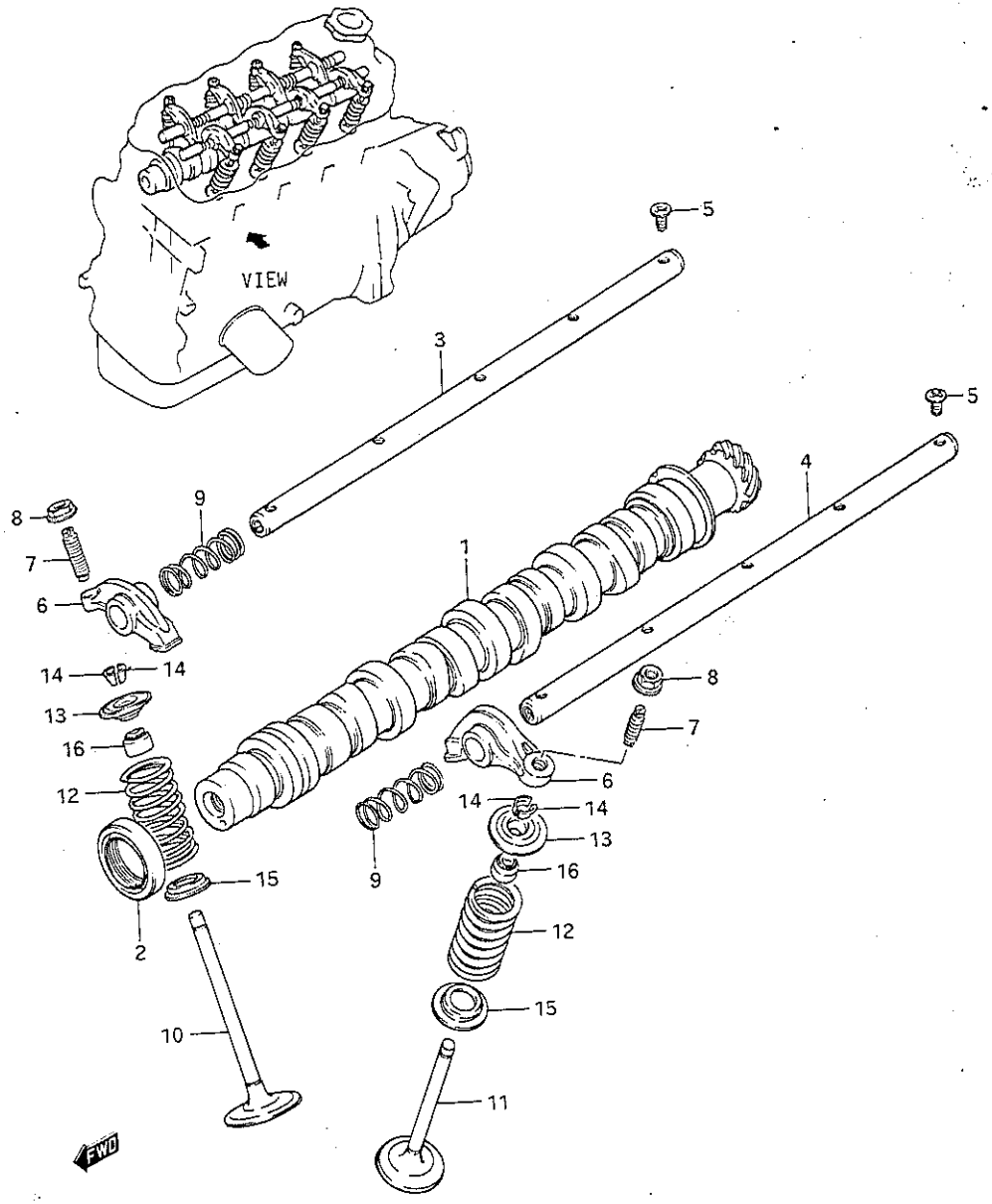

FIG.7 (1-8- 9) CAM SHAFT

REF.NO.	PART NO.	DESCRIPTION	Q'TY Q/W	Q'TY V	REMARKS
1	12710-83000	CAMSHAFT	1	1	
2	09283-32022	SEAL, camshaft oil (32x47x8)	1	1	
3	12860-82600	SHAFT, intake rocker arm	1	1	
4	12870-82600	SHAFT, exhaust rocker arm	1	1	
5	02122-06108	SCREW	10	10	
6	12841-82000	ARM, valve rocker	8	8	
7	12848-82000	SCREW, valve adjusting	8	8	
8	09159-07004	NUT	8	8	
9	12891-82001	SPRING, rocker arm	8	8	
10	12911-82000	VALVE, intake	4	4	
11	12915-82050	VALVE, exhaust	4	4	
12	12921-82000	SPRING, valve	8	8	
13	12931-82000	RETAINER, valve spring	8	8	
14	12932-82000	COTTER, valve	16	16	
15	12933-73000	SEAT, valve spring	8	8	
16	09289-07005	SEAL, valve stem	8	8	

FIG. 8

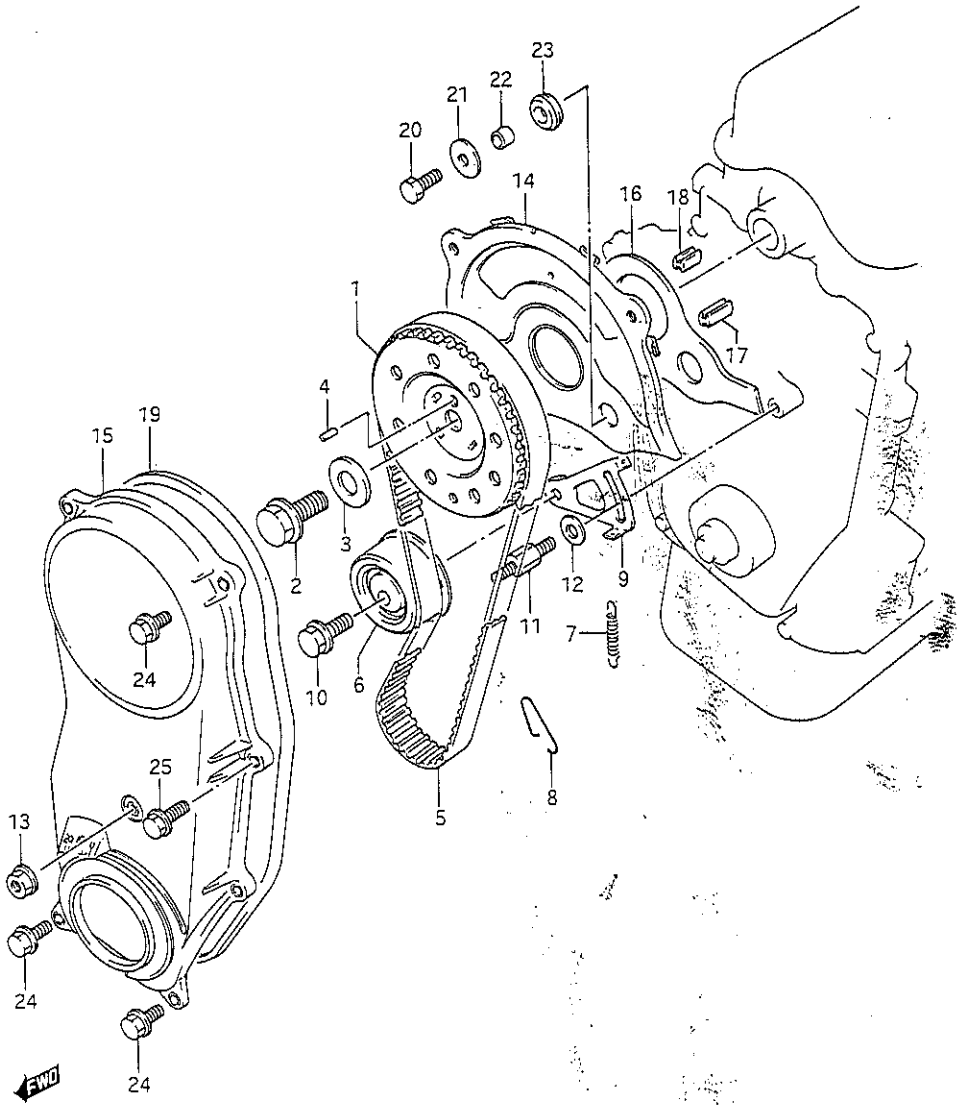

FIG.8 (1-B-10) TIMING BELT

REF.NO.	PART NO.	DESCRIPTION	Q'TY Q/W	Q'TY V	REMARKS
1	12741-82010	PULLEY, camshaft timing	1	1	
2	01537-12256	BOLT	1	1	
3	09160-12043	WASHER (12.5x32x4.5)	1	1	
4	09202-05027	PIN	1	1	
5	12761-82000	BELT, timing	1	1	
6	12810-82002	TENSIONER ASSY, timing belt	1	1	
7	12821-82001	SPRING, tensioner	1	1	
8	12823-82001	DAMPER, tensioner spring	1	1	
9	12822-82001	PLATE, tensioner	1	1	
10	01517-08356	BOLT	1	1	
11	09108-06056	STUD BOLT	1	1	
12	09160-06057	WASHER (6.5x18x1.6)	1	1	
13	08316-16063	NUT	1	1	
14	11380-83000	COVER, timing belt inside	1	1	
15	11390-82000	COVER, timing belt outside	1	1	
16	11383-82000	SEAL, inside cover	1	1	
17	11394-82000	SEAL, water pump & oil pump	1	1	
18	11394-82000	SEAL, water pump & head	1	1	L:18.5→12.5
19	11396-82000	SEAL, outside cover	1	1	
20	01107-06206	BOLT	2	2	
21	09160-06027	WASHER (6.5x20x1.2)	2	2	
22	09180-06106	SPACER (6.8x10x7)	2	2	
23	09308-10004	GROMMET	2	2	
24	01517-06163	BOLT	3	3	
25	01517-06203	BOLT	5	5	

FIG.9

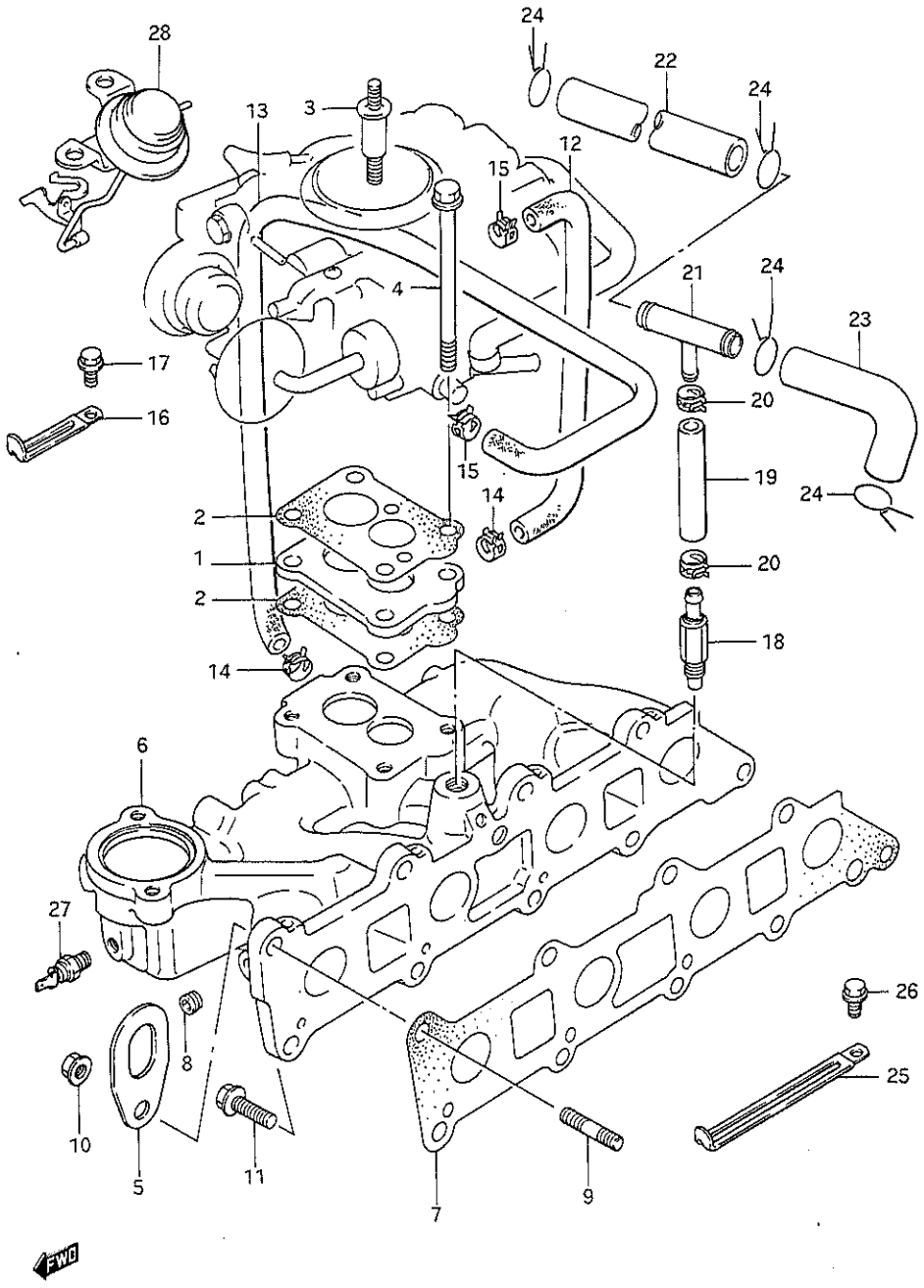

FIG.9 (1-B-11) INTAKE MANIFOLD

REF.NO.	PART NO.	DESCRIPTION	Q'TY Q/W	Q'TY V	REMARKS
1	13129-83000	SPACER, carburetor	1	1	
2	13125-83000	GASKET, carburetor	2	2	
3	13839-83000	STUD BOLT, intake case	1	1	
4	09103-08231	BOLT, carburetor	4	4	
5	11851-73001	HOOK, engine	2	2	
6-1	13110-83000	MANIFOLD, intake	1	1	W/heater
6-2	13110-83010	MANIFOLD, intake	1	1	N/heater
6-3	13110-83040	MANIFOLD, intake	1	1	W/heater E2,E6,E15,E16,E19,E30, E34,E35,E39,E54,E68
6-4	13110-83040	MANIFOLD, intake	1	1	E22,E25:N/catalyzer
6-5	13110-83200	MANIFOLD, intake	1	1	E22,E25:W/catalyzer
6-6	13110-83090	MANIFOLD, intake	1	1	N/heater,E30,E35
6-7	13110-83020	MANIFOLD, intake	1	1	W/heater,E43
6-8	13110-83030	MANIFOLD, intake	1	1	N/heater,E43
7	13119-82601	GASKET, intake manifold	1	1	
8	09246-04002	PLUG	1	1	
9	01421-08253	STUD BOLT	3	3	
10	08316-16083	NUT	3	3	
11-1	01517-08253	BOLT	5	5	
11-2	01517-08256	BOLT, earth	1	1	
12	13191-83000	HOSE, carburetor choke inlet	1	1	W/carb.:auto choke E2,E6,E15,E16,E17,E18, E19,E22,E25,E30,E34, E35,E39,E43,E54,E68
13	13192-83000	HOSE, carburetor choke outlet	1	1	W/carb.:auto choke E2,E6,E15,E16,E17,E18, E19,E22,E25,E30,E34, E35,E39,E43,E54,E68

Note : E17,E18 and E39 (W/catalyzer) see next fig.

SJ413-4 E1

FIG.9

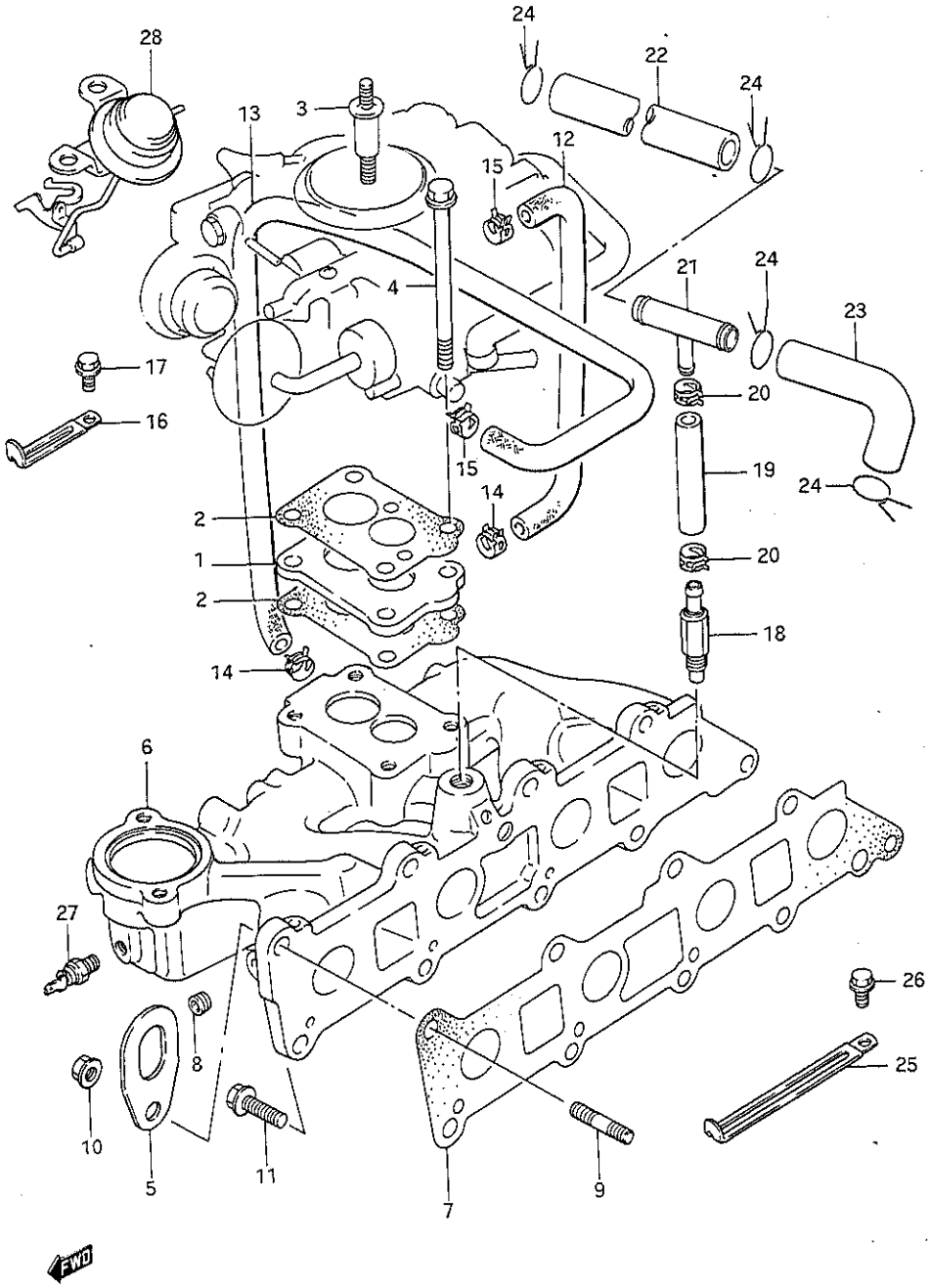

FIG.9 (1-B-12) INTAKE MANIFOLD

REF.NO.	PART NO.	DESCRIPTION	Q'TY Q/W	Q'TY V	REMARKS
14	09401-12404	CLIP	2	2	W/carb.:auto choke E2,E6,E15,E16,E17,E18, E19,E22,E25,E30,E34, E35,E39,E43,E54,E68
15	09401-12405	CLIP	2	2	W/carb.:auto choke E2,E6,E15,E16,E17,E18, E19,E22,E25,E30,E34, E35,E39,E43,E54,E68
16	09404-06404	CLAMP	1	1	W/carb.:auto choke E2,E6,E15,E16,E17,E18, E19,E22,E25,E30,E34, E35,E39,E43,E54,E68
17	01517-06103	BOLT	1	1	W/carb.:auto choke E2,E6,E15,E16,E17,E18, E19,E22,E25,E30,E34, E35,E39,E43,E54,E68
18	18118-80010	VALVE, PCV	1	1	
19	11193-80000	HOSE, PCV	1	1	
20	09401-13406	CLAMP	2	2	
21	09367-14003	SWAY, PCV	1	1	
22	11191-79200	HOSE, breather (L:625→420)	1	1	
23	11192-83000	HOSE, breather	1	1	
24	09401-18304	CLAMP	4	4	
25	09404-06404	CLAMP	1	1	
26	01517-06103	BOLT	1	1	
27	34850-82000	GAUGE ASSY, water temp	1	1	
28	13280-82100	IDLE UP ASSY, air con	1	1	W/air con

FIG.10

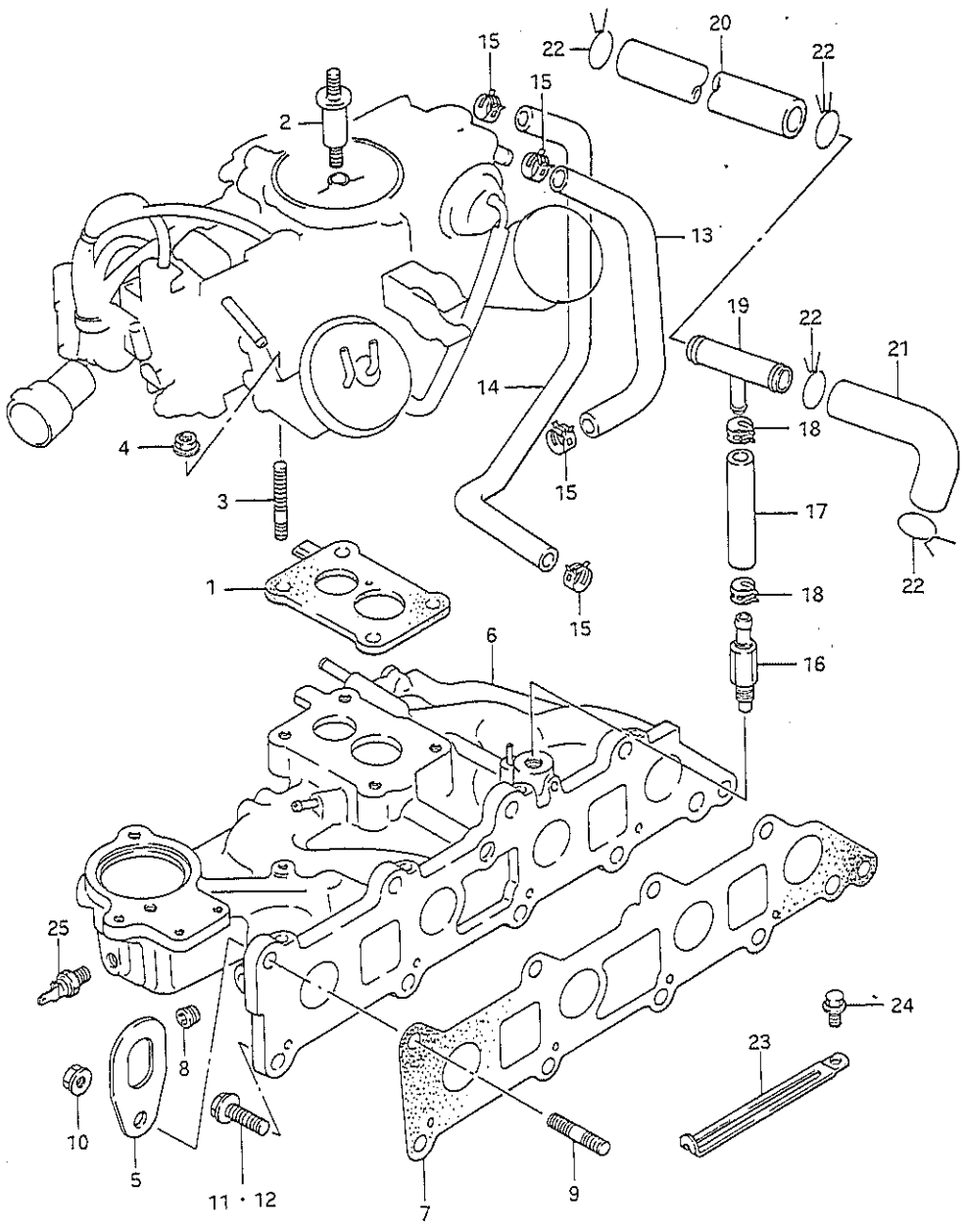

SJ413-4 E1

FIG.10 (1-B-13) INTAKE MANIFOLD (E17,E18 AND E39:W/CATALYZER)

REF.NO.	PART NO.	DESCRIPTION	Q'TY Q/W	Q'TY V	REMARKS
1	13121-83000	INSULATOR, carburetor	1	1	
2	13839-83010	STUD BOLT, intake case	1	1	
3	01421-08306	STUD BOLT, carburetor	4	4	
4	08316-16086	NUT	4	4	
5	11851-73001	HOOK, engine	2	2	
6	13110-83110	MANIFOLD, intake	1	1	
7	13119-82601	GASKET, intake manifold	1	1	
8	09246-04002	PLUG, boost	1	1	
9	01421-08253	STUD BOLT	4	4	
10	08316-16083	NUT	4	4	
11	01517-08253	BOLT	4	4	
12	01517-08256	BOLT, earth	1	1	
13	13191-83011	HOSE, choke inlet	1	1	
14	13192-83011	HOSE, choke outlet	1	1	
15	09401-12404	CLIP	4	4	
16	18118-80010	VALVE, PCV	1	1	
17	09354-70153-285	HOSE, PCV	1	1	L:285→130
18	09401-13406	CLAMP	2	2	
19	09367-14003	JOINT, 3 way	1	1	
20	11191-79200	HOSE, breather	1	1	L:625→420
21	11192-83000	HOSE, breather	1	1	
22	09401-18304	CLAMP	4	4	
23	09404-06404	CLAMP, breather hose	1	1	
24	01517-06103	BOLT	1	1	
25	34850-82000	GAUGE ASSY, water temp	1	1	

SJ413-4 E1

FIG.11

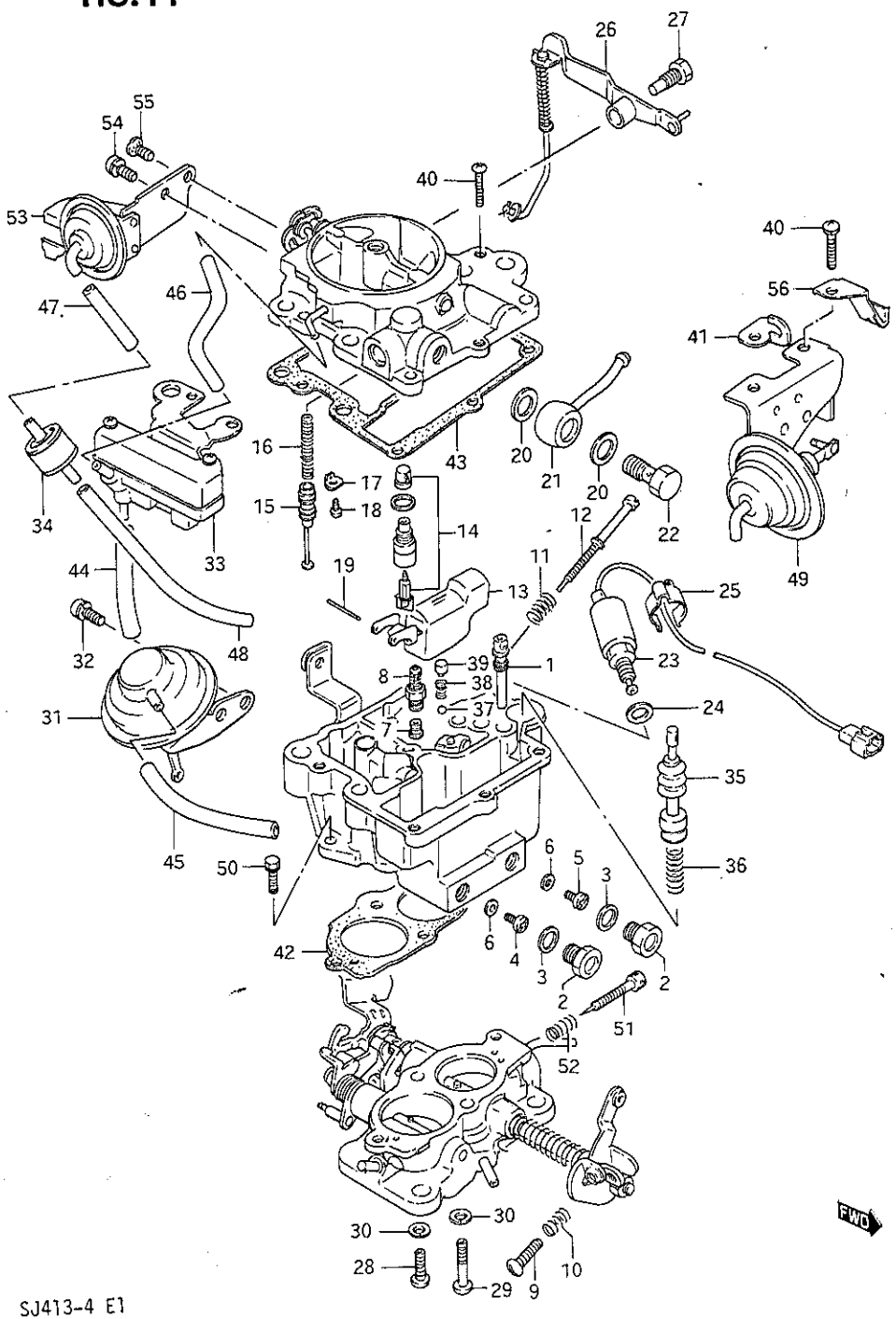

SJ413-4 E1

FIG.11 (1-B-14) CARBURETOR (MANUAL CHOKE TYPE)

REF.NO.	PART NO.	DESCRIPTION	Q'TY Q/W	Q'TY V	REMARKS
	13200-83000	CARBURETOR ASSY	1	1	
1	13252-83000	.JET ASSY, slow	1	1	
2	13256-82100	.PLUG	2	2	
3	13257-82100	.GASKET	2	2	
4	09491-95009	.JET, first main	1	1	
5	09491-21021	.JET, second main	1	1	
6	13259-82100	.GASKET, main jet	2	2	
7	09491-60008	.JET, power	1	1	
8	13263-82100	.VALVE ASSY, power	1	1	
9	13272-83000	.SCREW, adjust	1	1	
10	13282-82100	.SPRING	1	1	
11	13282-82100	.SPRING, idle adjust screw	1	1	
12	13296-82100	.SCREW, throttle adjust	1	1	
13	13213-82100	.FLOAT	1	1	
14	13214-82100	.VALVE ASSY, needle	1	1	
15	13215-82100	.PISTON, power	1	1	
16	13219-82040	.SPRING, power piston	1	1	
17	13216-82100	.STOPPER, power piston	1	1	
18	13223-82100	.SCREW, stopper	1	1	
19	13221-82100	.PIN, float lever	1	1	
20	13218-82100	.GASKET, union nipple	2	2	
21	13236-83000	.NIPPLE, union	1	1	
22	13237-82100	.BOLT, union nipple	1	1	
23	13260-83000	.VALVE ASSY	1	1	
24	13269-82100	.GASKET, valve	1	1	
25	13254-82100	.CLAMP	1	1	
26	13310-82640	.ARM ASSY, pump	1	1	
27	13244-82100	.SCREW, arm	1	1	

Note
FIG.12 (C-2) : E2,E6,E15,E16,E19,E30,E34,E35,E43,E54,E68 and E22,E25,E39 (N/catalyzer)
FIG.13 (C-5) : E17,E18 and E39 (W/catalyzer)
FIG.14 (C-8) : E22,E25 (W/catalyzer)

SJ413-4 E1

FIG.11

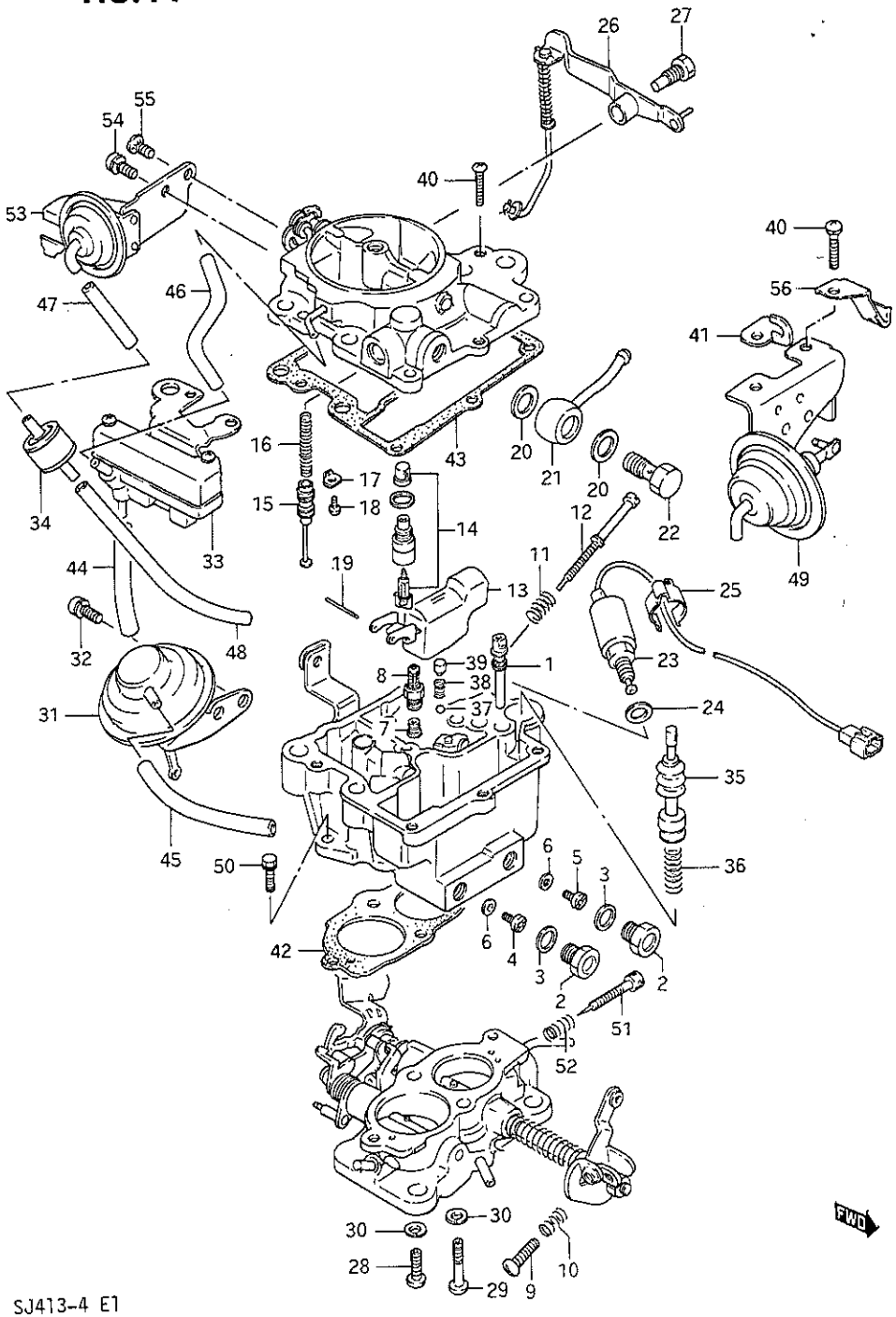

SJ413-4 E1

FIG.11 (1-B-15) CARBURETOR (MANUAL CHOKE TYPE)

REF.NO.	PART NO.	DESCRIPTION	Q'TY Q/W	Q'TY V	REMARKS
28	13371-82100	.SCREW	1	1	
29	13372-82100	.SCREW	1	1	
30	13381-82100	.LOCK WASHER	2	2	
31	13330-82100	.DIAPHRAGM ASSY	1	1	
32	13373-82100	.SCREW	2	2	
33	13320-83001	.VALVE ASSY	1	1	
34	18480-79110	.JET ASSY	1	1	
35	13321-82100	.PLUNGER ASSY, pump	1	1	
36	13323-82100	.SPRING, pump	1	1	
37	13322-82100	.BALL	1	1	
38	13331-83000	.SPRING	1	1	
39	13327-82100	.STOPPER	1	1	
40	13374-82100	.SCREW	5	5	
41	13326-83000	.STOPPER	1	1	
42	13329-82100	.GASKET	1	1	
43	13243-82100	.GASKET, air horn	1	1	
44	13341-83001	.HOSE	1	1	
45	09343-03089	.HOSE	2	2	
46	13346-83000	.HOSE	1	1	
47	13347-82230	.HOSE	1	1	
48	13347-82100	.HOSE	1	1	
49	13360-83000	.DIAPHRAGM ASSY	1	1	
50	13375-82100	.SCREW	2	2	
51	13297-83000	.SCREW, idle adjust	1	1	
52	13282-82100	.SPRING, adjust screw	1	1	
53	13212-82030	.DIAPHRAGM ASSY	1	1	
54	13224-82030	.SCREW	1	1	
55	13225-82030	.SCREW	1	1	
56	13261-83000	.CLAMP	1	1	
57	13200-86810	.GASKET SET, carburetor (Inc.Ref.No.3,6,20,24,42 and 43)	1	1	not shown

SJ413-4 E1

FIG. 12

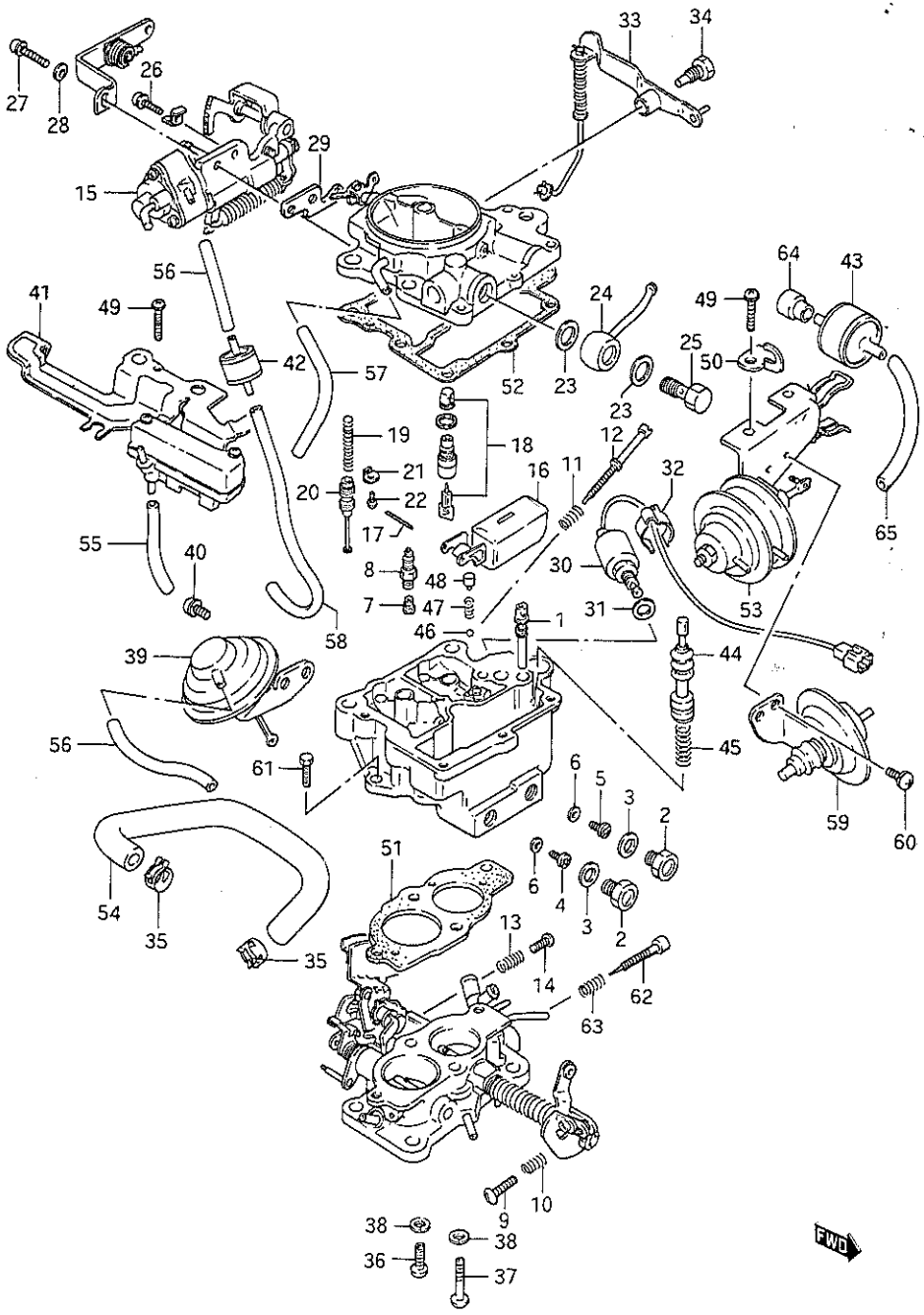

FIG.12 (1-C- 2) CARBURETOR (AUTO CHOKE TYPE:SEE NOTE 1)

REF.NO.	PART NO.	DESCRIPTION	Q'TY Q/W	Q'TY V	REMARKS
	13200-83010	CARBURETOR ASSY	1	1	E2,E6,E15,E16,E19,E30, E34,E35,E54,E68
	13200-83010	CARBURETOR ASSY	1	1	E22,E25,E39:N/catalyzer
	13200-83020	CARBURETOR ASSY	1	1	E43
1	13252-83000	.JET ASSY, slow	1	1	
2	13256-82100	.PLUG	2	2	
3	13257-82100	.GASKET	2	2	
4	09491-95009	.JET, first main	1	1	
5	09491-21021	.JET, second main	1	1	
6	13259-82100	.GASKET, main jet	2	2	
7	09491-60008	.JET, power	1	1	
8	13263-82100	.VALVE ASSY, power	1	1	
9	13272-83000	.SCREW, adjust	1	1	
10	13282-82100	.SPRING	1	1	
11	13282-82100	.SPRING, idle adjust screw	1	1	
12	13296-82100	.SCREW, throttle adjust	1	1	
13	13282-82100	.SPRING, idle adjust screw	1	1	
14	13291-82100	.SCREW, idle adjust	1	1	
15	13212-83010	.ADAPTER	1	1	
16	13213-82100	.FLOAT	1	1	
17	13221-82100	.PIN, float lever	1	1	
18	13214-82100	.VALVE ASSY, needle	1	1	

Note 1 : E2,E6,E15,E16,E19,E30,E34,E35,E43,E54,E68 and E22,E25,E39 (N/catalyzer)

Note 2
FIG.13 (C-5) : E17,E18 and E39 (W/catalyzer)
FIG.14 (C-8) : E22,E25 (W/catalyzer)

FIG. 12

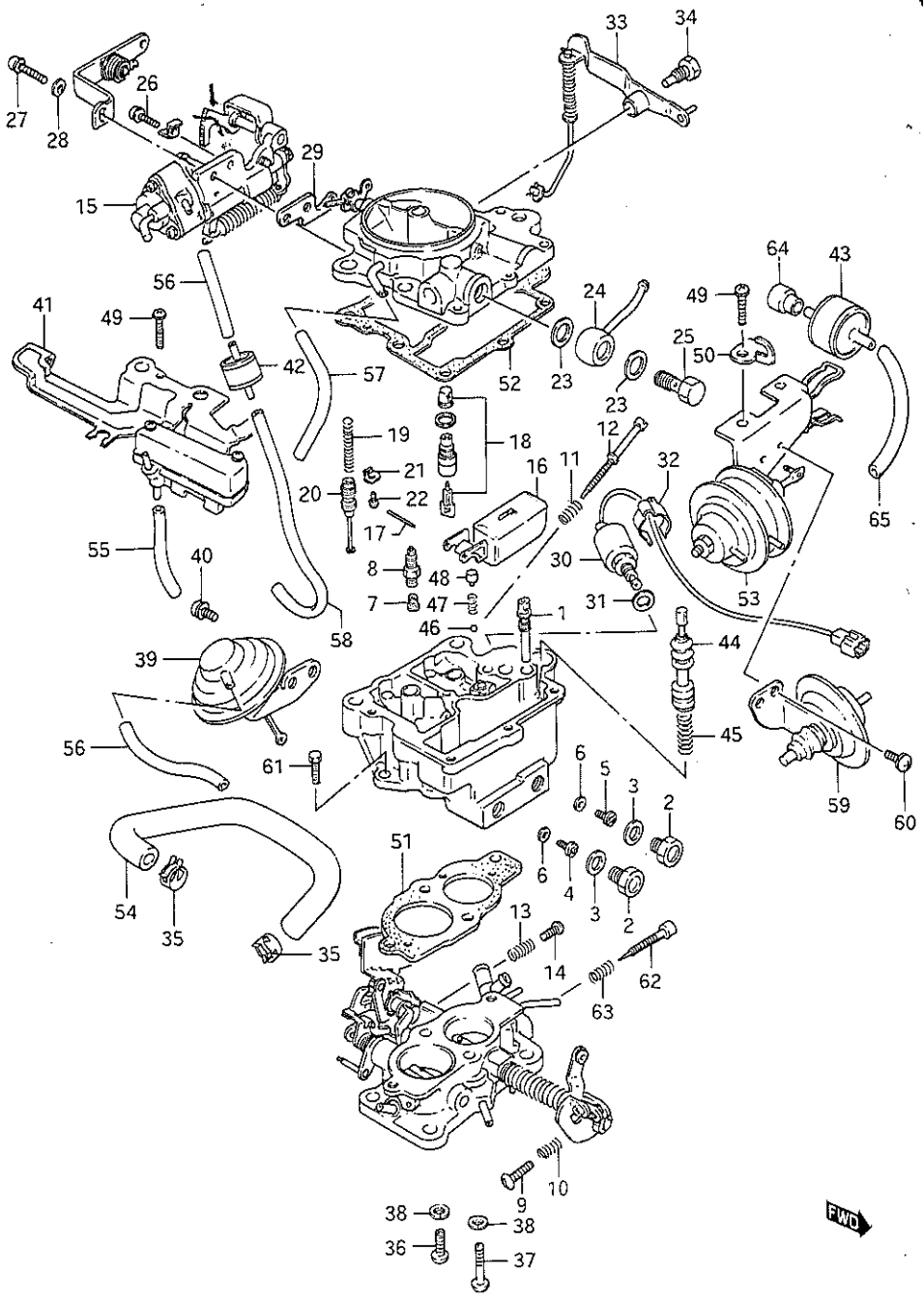

FIG.12 (1-C- 3) CARBURETOR (AUTO CHOKE TYPE:SEE NOTE 1)

REF.NO.	PART NO.	DESCRIPTION	Q'TY Q/W	Q'TY V	REMARKS
19	13219-82040	.SPRING, power piston	1	1	
20	13215-82100	.PISTON, power	1	1	
21	13216-82100	.STOPPER, power piston	1	1	
22	13223-82100	.SCREW, stopper	1	1	
23	13218-82100	.GASKET, union nipple	2	2	
24	13236-83000	.NIPPLE, union	1	1	
25	13237-82100	.BOLT, union nipple	1	1	
26	13225-82100	.SCREW	1	1	
27	13226-82100	.SCREW	1	1	
28	13238-82100	.WASHER	1	1	
29	13241-82100	.INSULATOR	1	1	
30	13260-83000	.VALVE ASSY	1	1	
31	13269-82100	.GASKET, valve	1	1	
32	13254-82100	.CLAMP	1	1	
33	13310-82640	.ARM ASSY, pump	1	1	
34	13244-82100	.SCREW, pump arm	1	1	
35	13324-82100	.CLAMP	2	2	
36	13371-82100	.SCREW	1	1	
37	13372-82100	.SCREW	1	1	
38	13381-82100	.LOCK WASHER	2	2	
39	13330-82100	.DIAPHRAGM ASSY.	1	1	
40	13373-82100	.SCREW	2	2	
41	13320-83011	.VALVE ASSY	1	1	
42	18115-83010	.JET ASSY	1	1	
43	13319-82100	.VALVE ASSY	1	1	
44	13321-82100	.PLUNGER ASSY, pump	1	1	
45	13323-82100	.SPRING, pump	1	1	

Note 1 : E2,E6,E15,E16,E19,E30,E34,E35,E43,E54,E68
and E22,E25,E39 (N/catalyzer)

SJ413-4 E1

FIG. 12

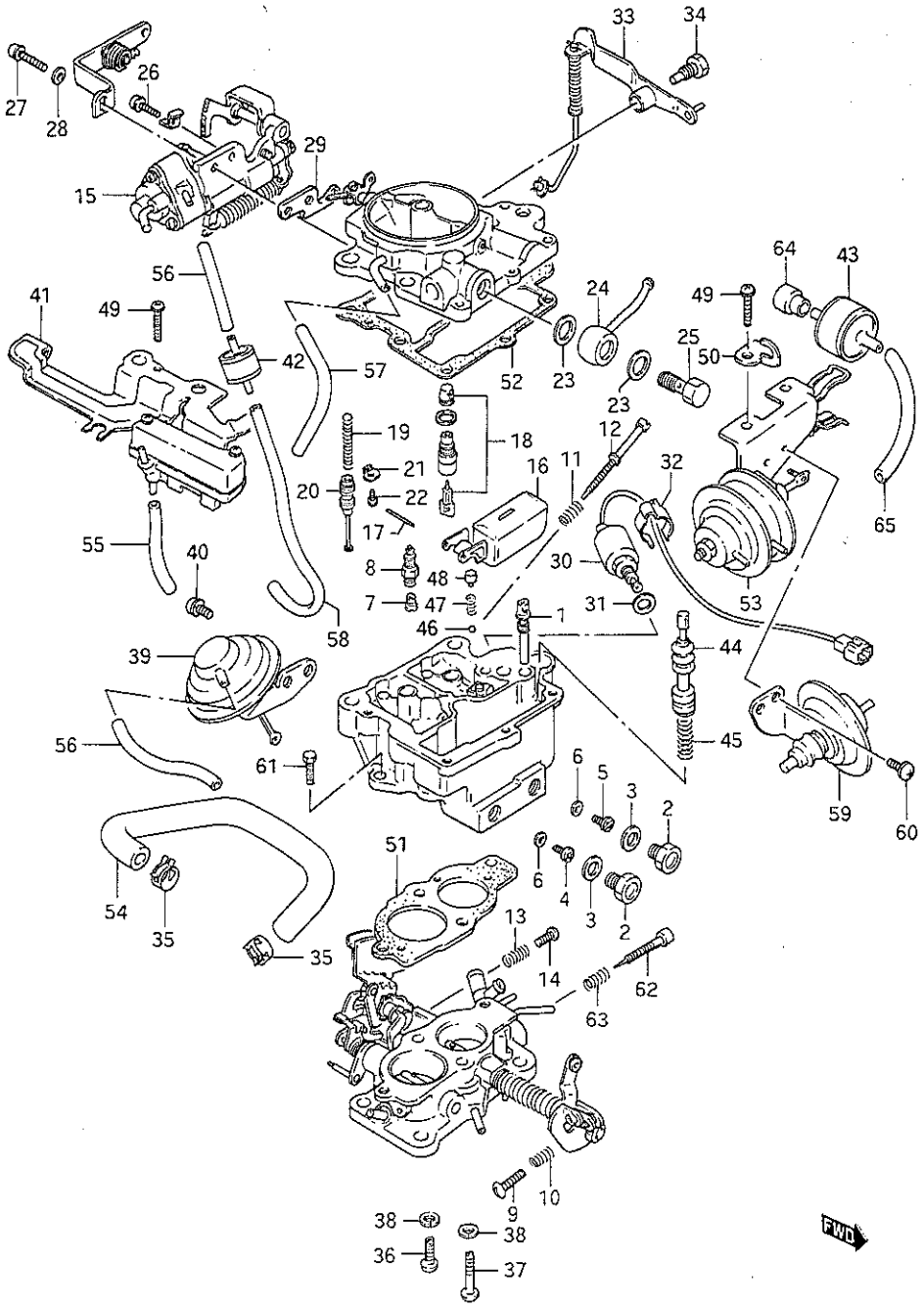

FIG.12 (1-C- 4) CARBURETOR (AUTO CHOKE TYPE:SEE NOTE 1)

REF.NO.	PART NO.	DESCRIPTION	Q'TY Q/W	Q'TY V	REMARKS
46	13322-82100	.BALL	1	1	
47	13331-83000	.SPRING	1	1	
48	13327-82100	.STOPPER	1	1	
49	13374-82100	.SCREW	5	5	
50	13326-83000	.STOPPER	1	1	
51	13329-82100	.GASKET	1	1	
52	13243-82100	.GASKET, air horn	1	1	
53-1	13360-83010	.DIAPHRAGM ASSY	1	1	
53-2	13360-83020	.DIAPHRAGM ASSY	1	1	E43
54	13341-83010	.HOSE	1	1	
55	13341-83001	.HOSE	1	1	
56	09343-03089	.HOSE	2	2	
57	13346-83000	.HOSE	1	1	
58	13344-82300	.HOSE	1	1	
59	13350-83011	.POSITIONER ASSY	1	1	
60	13351-83010	.SCREW, positioner	2	2	
61	13375-82100	.SCREW	2	2	
62	13297-82100	.SCREW, idle adjust	1	1	
63	13282-82100	.SPRING, adjust screw	1	1	
64	18133-80400	.FILTER	1	1	
65	09343-03087	.HOSE	1	1	
66	13200-86810	.GASKET SET, carburetor (Inc.Ref.No.3,6,23,31,51 and 52)	1	1	not shown

Note 1 : E2,E6,E15,E16,E19,E30,E34,E35,E43,E54,E68 and E22,E25,E39 (N/catalyzer)

FIG.13

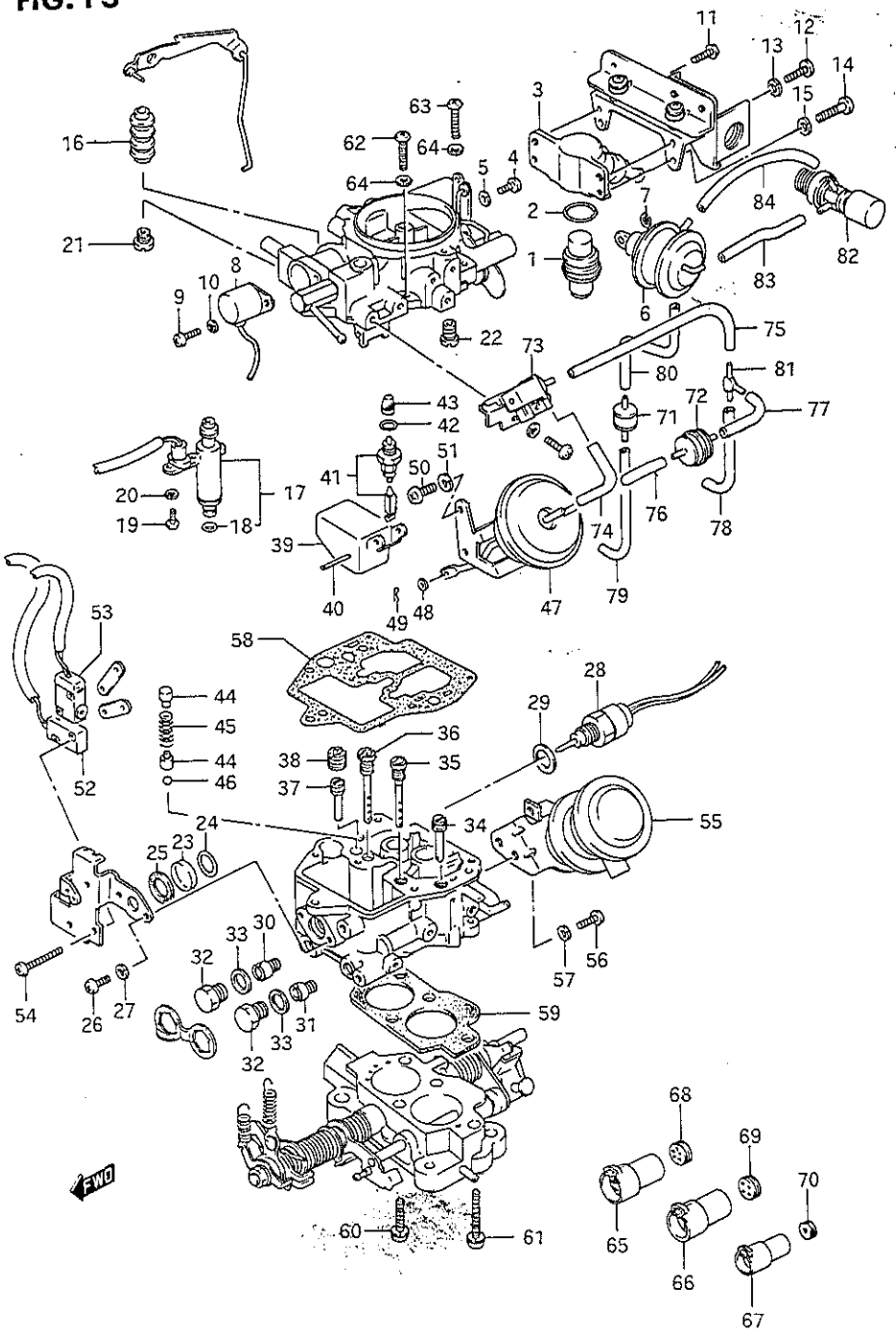

FIG.13 (1-C- 5) CARBURETOR (E17,E18 AND E39:W/CATALYZER)

REF.NO.	PART NO.	DESCRIPTION	Q'TY M/W	Q'TY V	REMARKS
	13200-83160	CARBURETOR ASSY	1	1	
1	13228-82080	.ELEMENT, thermo	1	1	
2	13229-82080	.O RING	1	1	
3	13227-82080	.HOLDER, thermo element	1	1	
4	02112-05126	.SCREW	2	2	
5	08321-21056	.LOCK WASHER	2	2	
6	13235-83100	.PISTON ASSY, choke	1	1	
7	13374-82000	.E RING	1	1	
8	13220-83050	.SOLENOID, switch vent	1	1	
9	02112-04106	.SCREW	2	2	
10	08321-21046	.LOCK WASHER	2	2	
11	13377-83050	.SCREW	2	2	
12	02112-06126	.SCREW	1	1	
13	08321-21066	.LOCK WASHER	1	1	
14	13234-83060	.SCREW	1	1	
15	08321-31066	.LOCK WASHER	1	1	
16	13233-82020	.BOOT, pump	1	1	
17	13240-83050	.VALVE ASSY, solenoid	1	1	
18	13241-82000	..O RING	1	1	
19	02112-04106	.SCREW	3	3	
20	08321-21046	.LOCK WASHER	3	3	
21	13265-83060	.BLEEDER, slow air (#140)	1	1	
22	13266-83060	.BLEEDER, slow air (#70)	1	1	
23	13251-82000	.GAUGE, level	1	1	
24	13252-82000	.O RING	1	1	
25	13267-82000	.GASKET, level gauge	1	1	
26	02112-05086	.SCREW	2	2	
27	08321-21056	.LOCK WASHER	2	2	
28	13261-83100	.VALVE, solenoid	1	1	
29	13262-82000	.WASHER, solenoid valve	1	1	
30	09491-85009	.JET, main (#85)	1	1	
31	09491-28013	.JET, main (#140)	1	1	
32	13254-82000	.PLUG, drain	2	2	
33	13363-82000	.GASKET, drain plug	2	2	

SJ413-4 E1

FIG. 13

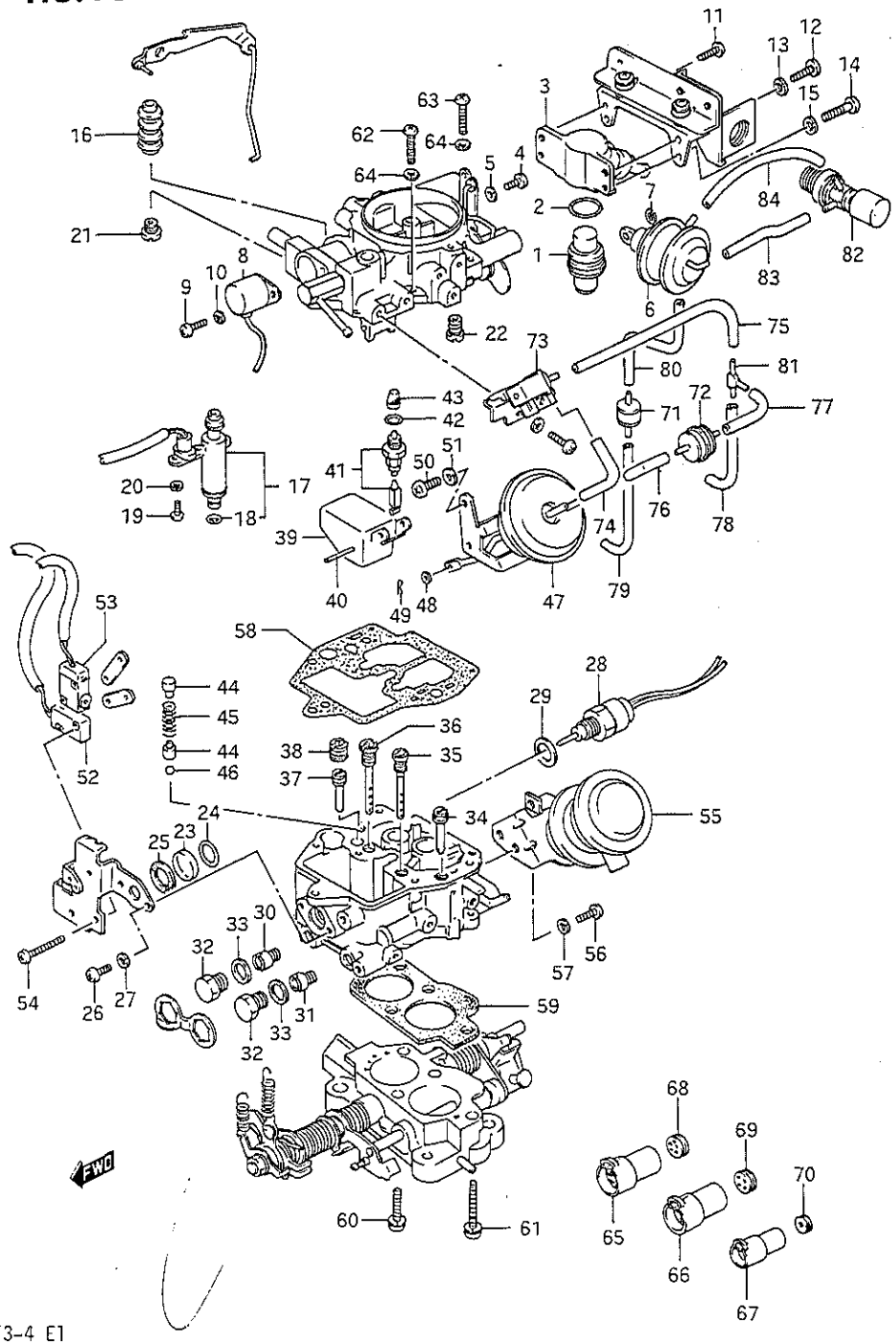

FIG.13 (1-C- 6) CARBURETOR (E17,E18 AND E39:W/CATALYZER)

REF.NO.	PART NO.	DESCRIPTION	Q'TY Q/W	Q'TY V	REMARKS
34	09492-20017	.JET, slow (#100)	1	1	
35	13259-83060	.BLEEDER, main air (#70)	1	1	
36	13258-83060	.BLEEDER, main air (#60)	1	1	
37	09492-53001	.JET, slow (#53)	1	1	
38	13266-82000	.BLEEDER, slow air (#100)	1	1	
39	13319-82000	.FLOAT	1	1	
40	13323-82000	.PIN, float	1	1	
41	13332-82000	.VALVE ASSY, needle	1	1	
42	13364-82000	.GASKET, needle valve	1	1	
43	13324-82000	.FILTER, needle valve	1	1	
44	13321-82000	.WEIGHT, injector	2	2	
45	13322-82000	.SPRING, injector	1	1	
46	13325-82000	.BALL	1	1	
47	13330-83100	.CHAMBER ASSY, diaphragm	1	1	
48	13372-86060	.WASHER	1	1	
49	13371-82000	.COTTER PIN	1	1	
50	02112-06106	.SCREW	2	2	
51	08321-21066	.LOCK WASHER	2	2	
52	13337-83060	.SWITCH, idle micro	1	1	
53	13338-83060	.SWITCH, WOT micro	1	1	
54	13375-82000	.SCREW	4	4	
55	13350-83100	.ACTUATOR ASSY	1	1	
56	02112-05126	.SCREW	2	2	
57	08321-21056	.LOCK WASHER	2	2	
58	13361-83060	.GASKET, choke chamber	1	1	
59	13362-82000	.INSULATOR	1	1	
60	13382-83060	.SCREW	1	1	
61	13384-83060	.SCREW	3	3	
62	02112-05166	.SCREW	3	3	
63	02112-05206	.SCREW	3	2	
64	08321-21056	.LOCK WASHER	5	5	
65	13391-83050	.HOUSING, 5P	1	1	
66	13392-83060	.HOUSING, 4P	1	1	
67	13393-83060	.HOUSING, 1P	1	1	

SJ413-4 E1

FIG.13

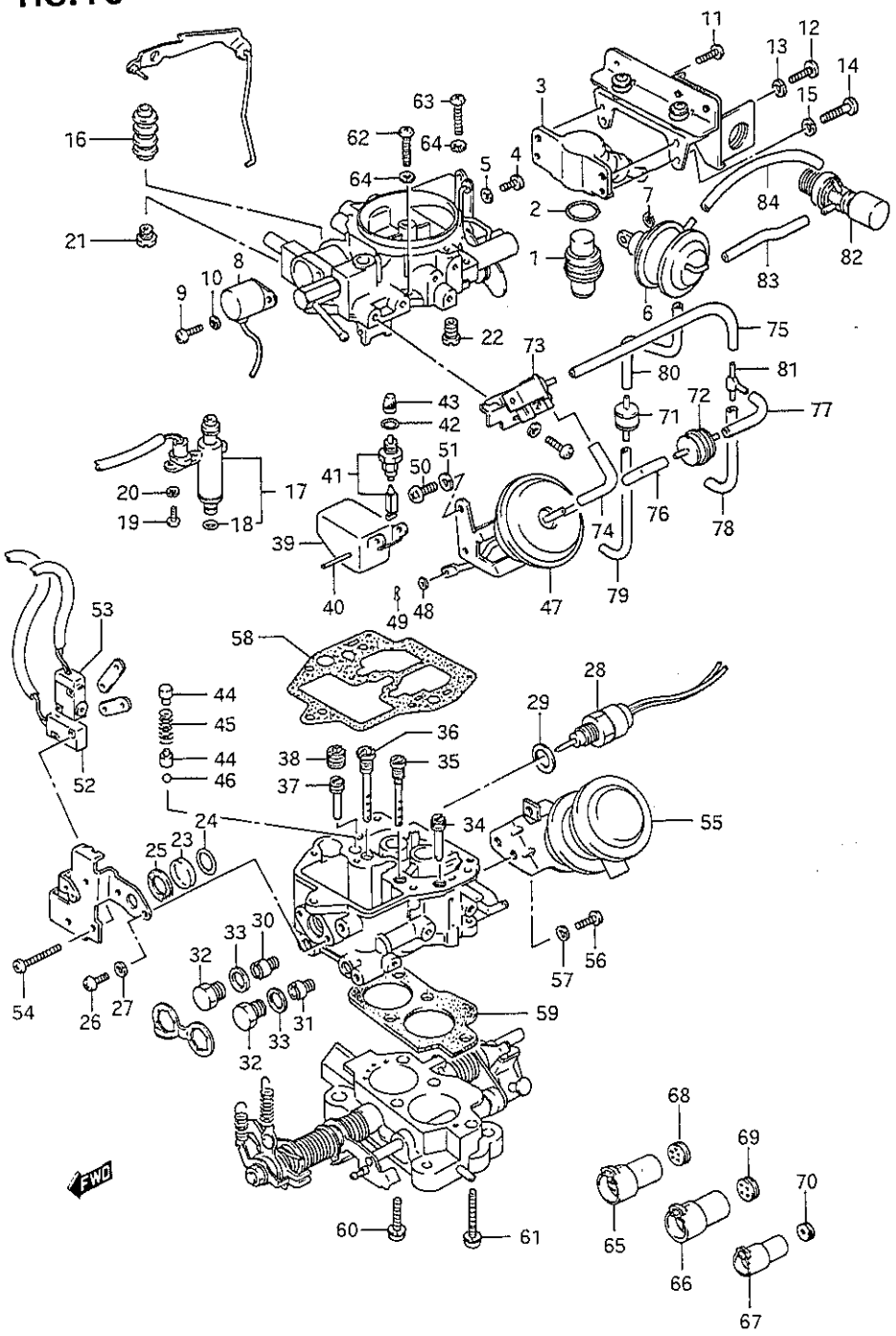

FIG.13 (1-C- 7) CARBURETOR (E17,E18 AND E39:W/CATALYZER)

REF.NO.	PART NO.	DESCRIPTION	Q'TY Q/W	Q'TY V	REMARKS
68	13394-83050	.CAP, 5P housing	1	1	
69	13395-83060	.CAP, 4P housing	1	1	
70	13396-83060	.CAP, 1P housing	1	1	
71	13318-82020	.VALVE, delay	1	1	
72	18114-83000	.VALVE, VTV	1	1	
73	18117-83010	.VALVE, VSV	1	1	
74	13426-83050	.HOSE	1	1	
75	13425-83050	.HOSE	1	1	
76	13424-83050	.HOSE	1	1	
77	13427-83050	.HOSE	1	1	
78	13423-83050	.HOSE	1	1	
79	13422-83100	.HOSE	1	1	
80	13421-83100	.HOSE	1	1	
81	09367-04002	.JOINT, 3 way	1	1	
82	18123-83010	.VALVE, BVS	1	1	
83	13428-83100	.HOSE	1	1	
84	13429-83100	.HOSE	1	1	
85	13200-83810	.GASKET SET, carburetor (Inc.Ref.No.2,18,24,25,29,33,42,58 and 59)	1	1	not shown

SJ413-4 E1

FIG. 14

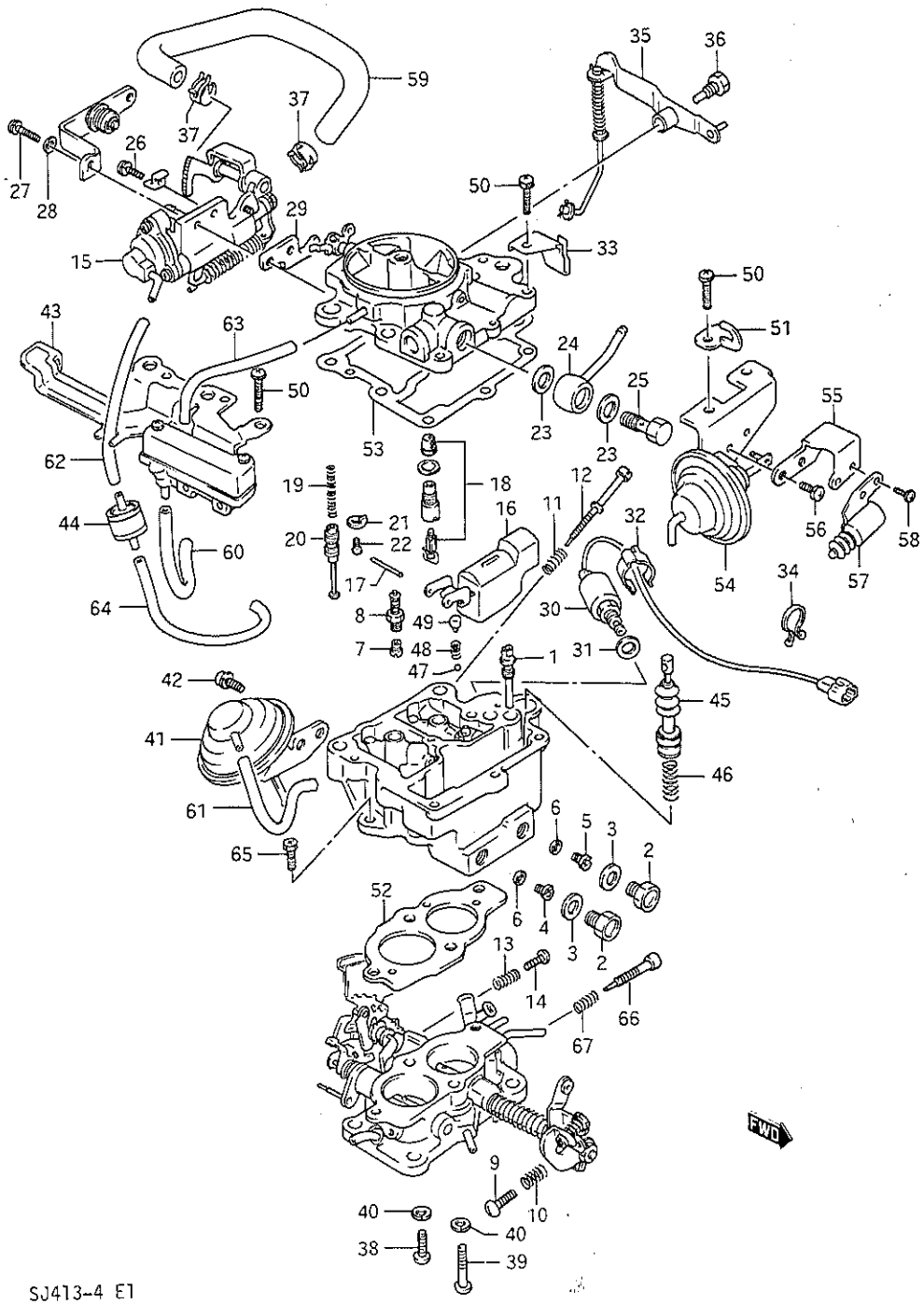

FIG.14 (1-C- 8) CARBURETOR (E22,E25:W/CATALYZER)

REF.NO.	PART NO.	DESCRIPTION	Q'TY Q	Q'TY V	REMARKS
	13200-83090	CARBURETOR ASSY	1	1	
1	13252-83000	.JET ASSY, slow	1	1	
2	13256-82100	.PLUG	2	2	
3	13257-82100	.GASKET	2	2	
4	13258-83090	.JET, first main	1	1	
5	09491-21021	.JET, second main	1	1	
6	13259-82100	.GASKET, main jet	2	2	
7	09491-60008	.JET, power	1	1	
8	13263-82100	.VALVE ASSY, power	1	1	
9	13272-83000	.SCREW, adjust	1	1	
10	13282-82100	.SPRING	1	1	
11	13282-82100	.SPRING, idle adjust screw	1	1	
12	13296-82100	.SCREW, throttle adjust	1	1	
13	13298-82300	.SPRING, idle adjust screw	1	1	
14	13291-82100	.SCREW, idle adjust	1	1	
15	13212-83090	.ADAPTER	1	1	
16	13213-82210	.FLOAT	1	1	
17	13221-82100	.PIN, float lever	1	1	
18	13214-82100	.VALVE ASSY, needle	1	1	
19	13219-82040	.SPRING, power piston	1	1	
20	13215-82100	.PISTON, power	1	1	
21	13216-82100	.STOPPER, power piston	1	1	
22	13223-82100	.SCREW, stopper	1	1	
23	13218-82100	.GASKET, union nipple	2	2	
24	13236-83000	.NIPPLE, union	1	1	
25	13237-82100	.BOLT, union nipple	1	1	
26	13225-82100	.SCREW	1	1	
27	13226-82100	.SCREW	1	1	
28	13238-82100	.WASHER	1	1	
29	13241-82100	.INSULATOR	1	1	
30	13260-83090	.VALVE ASSY	1	1	
31	13269-82100	.GASKET, valve	1	1	
32	13254-83090	.CLAMP	1	1	
33	13261-83090	.CLAMP	1	1	
34	13262-83090	.CLAMP	1	1	

SJ413-4 E1

FIG.14

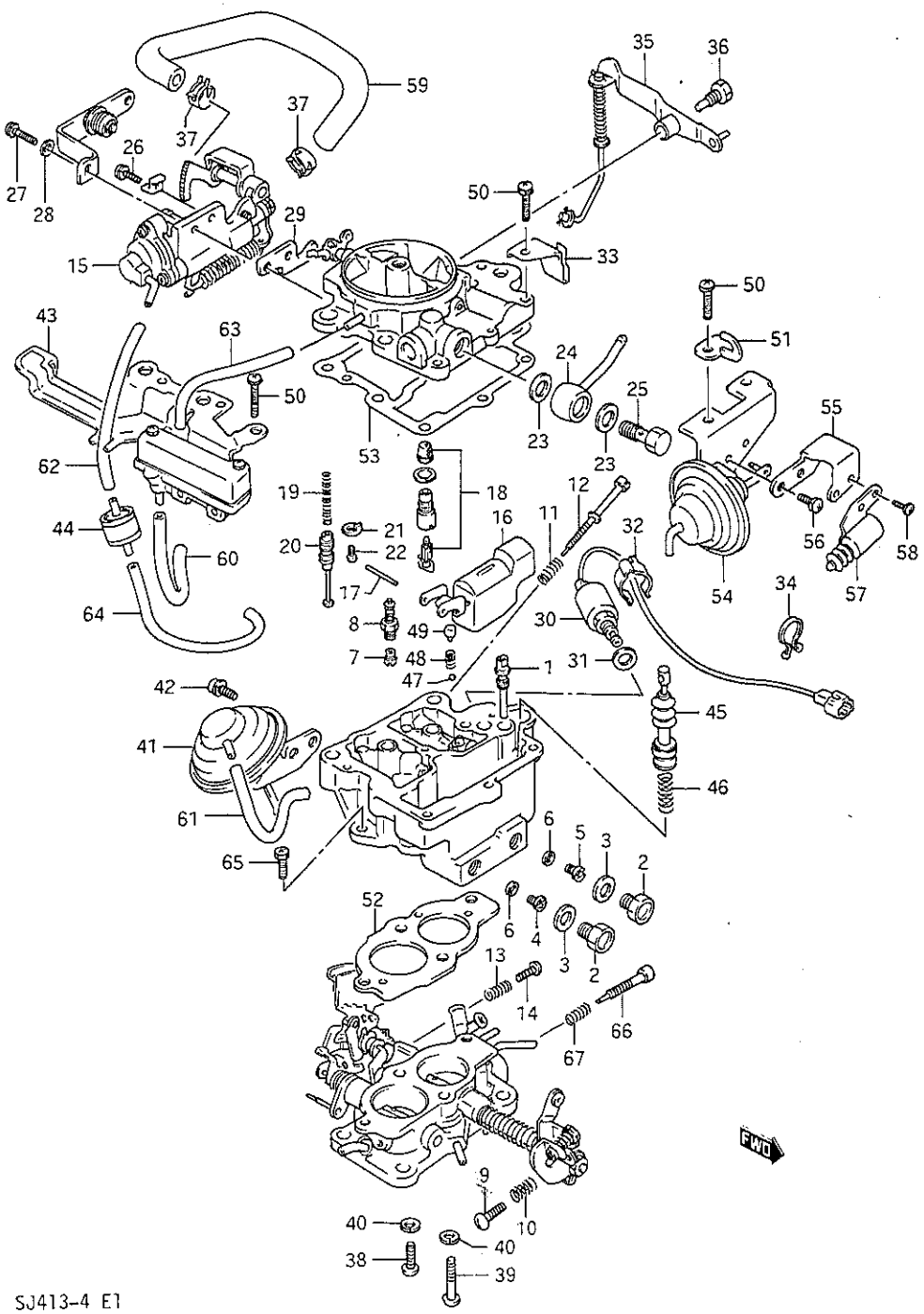

SJ413-4 E1

FIG.14 (1-C- 9) CARBURETOR (E22,E25:W/CATALYZER)

REF.NO.	PART NO.	DESCRIPTION	Q'TY Q	Q'TY V	REMARKS
35	13310-82640	.ARM ASSY, pump	1	1	
36	13244-82100	.SCREW, pump arm	1	1	
37	13324-82100	.CLAMP	2	2	
38	13371-82100	.SCREW	1	1	
39	13372-82100	.SCREW	1	1	
40	13381-82100	.LOCK WASHER	2	2	
41	13330-82100	.DIAPHRAGM ASSY	1	1	
42	13373-82100	.SCREW	2	2	
43	13320-83011	.VALVE ASSY	1	1	
44	18115-83010	.JET ASSY	1	1	
45	13321-82100	.PLUNGER ASSY, pump	1	1	
46	13323-82100	.SPRING, pump	1	1	
47	13322-82100	.BALL	1	1	
48	13331-83000	.SPRING	1	1	
49	13327-82100	.STOPPER	1	1	
50	13374-82100	.SCREW	5	5	
51	13326-83000	.STOPPER	1	1	
52	13329-82100	.GASKET	1	1	
53	13243-82100	.GASKET, air horn	1	1	
54	13360-83000	.DIAPHRAGM ASSY	1	1	
55	13352-83090	.BRACKET	1	1	
56	13351-83010	.SCREW, bracket	2	2	
57	13350-83090	.SWITCH ASSY	1	1	
58	13223-82100	.SCREW	2	2	
59	13341-83010	.HOSE	1	1	
60	13341-83001	.HOSE	1	1	
61	09343-03089	.HOSE	1	1	
62	13347-82300	.HOSE	1	1	
63	13346-83000	.HOSE	1	1	
64	13344-82300	.HOSE	1	1	
65	13375-82100	.SCREW	2	2	
66	13297-82100	.SCREW, idle adjust	1	1	
67	13282-82100	.SPRING, adjust screw	1	1	
68	13200-86810	.GASKET SET, carburetor (Inc.Ref.No.3,6,23,31,52 and 53)	1	1	not shown

SJ413-4 E1

FIG.15

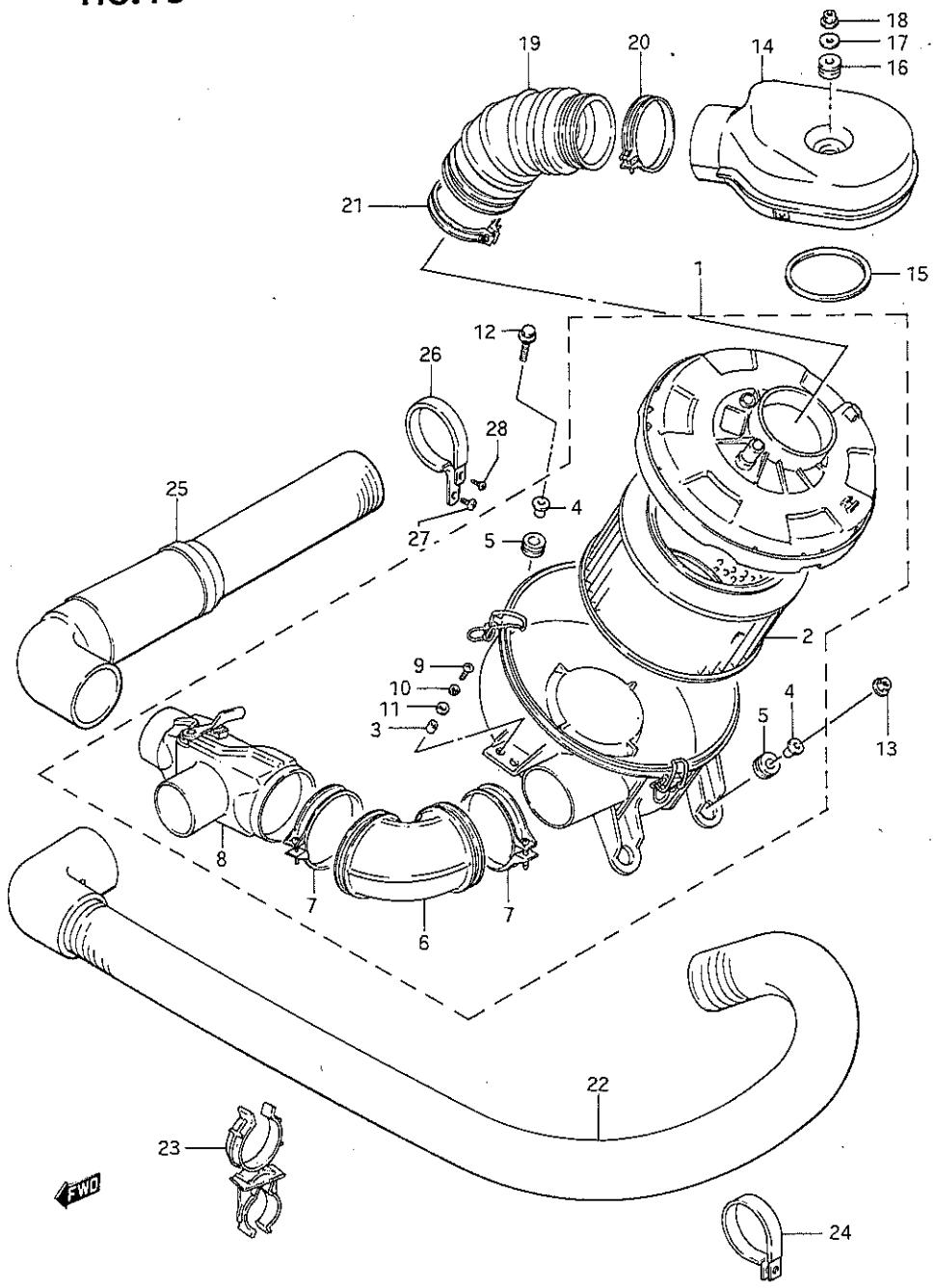

SJ413-4 E1

FIG.15 (1-C-10) AIR CLEANER

REF.NO.	PART NO.	DESCRIPTION	Q'TY Q/W	Q'TY V	REMARKS
1-1	13700-83001	CLEANER ASSY, air	1	1	W/warm air
1-2	13700-83011	CLEANER ASSY, air	1	1	N/warm air
2	13780-83000	.FILTER	1	1	
3	13712-83000	.SPACER	2	2	
4	13812-83001	.SPACER	3	3	
5	13813-83000	.GROMMET	3	3	
6	13731-83000	.JOINT	1	1	
7	09402-70207	.CLAMP	2	2	
8-1	13740-83000	.VALVE, warm air	1	1	W/warm air
8-2	13740-83010	.INTAKE, air	1	1	N/warm air
9	02112-06164	.SCREW	2	2	
10	08321-21064	.LOCK WASHER	2	2	
11	08322-21064	.WASHER	2	2	
12	01517-06203	BOLT	1	1	
13	08316-16063	NUT	2	2	
14	13830-83001	CASE, air intake	1	1	
15	13885-83000	SEAL, air intake case	1	1	
16	09320-09034	CUSHION, case	1	1	
17	09169-06057	WASHER, case	1	1	
18	08316-16063	NUT	1	1	
19	13881-83001	HOSE, air cleaner outlet	1	1	
20	09402-68202	CLAMP	1	1	
21	09402-82202	CLAMP	1	1	
22	13840-83000	HOSE, warm air	1	1	W/warm air
23	13860-83000	CLAMP, warm air hose	1	1	W/warm air
24	09403-48401	CLAMP, warm air hose	1	1	W/warm air
25	13870-83000	HOSE, cool air	1	1	
26	13896-83000	CLAMP, cool air hose	1	1	
27	02142-06123	SCREW	1	1	
28	03141-05106	SCREW	1	1	

Note
FIG.16 (C-11) : E17,E18 and E39 (W/catalyzer)
FIG.17 (C-13) : E22,E25 (W/catalyzer)

SJ413-4 E1

FIG.16

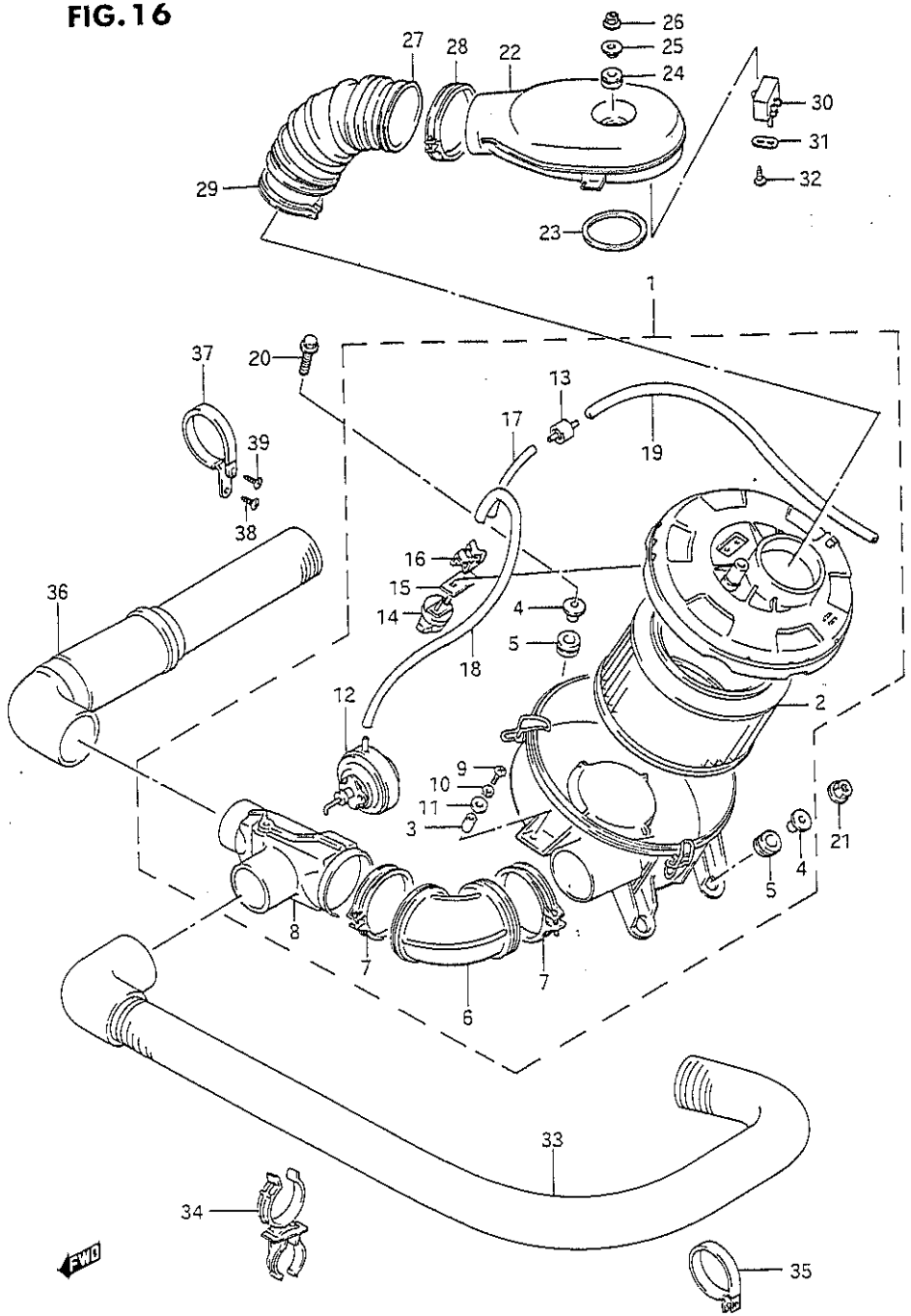

FIG.16 (1-C-11) AIR CLEANER (E17,E18 AND E39:W/CATALYZER)

REF.NO.	PART NO.	DESCRIPTION	Q'TY Q/W	Q'TY V	REMARKS
1	13700-83040	CLEANER ASSY, air	1	1	
2	13780-83000	.ELEMENT, air cleaner	1	1	
3	13712-83000	.SPACER	2	2	
4	13812-83001	.SPACER	3	3	
5	13813-83000	.GROMMET	3	3	
6	13731-83000	.JOINT, warm air valve	1	1	
7	09402-70207	.CLAMP	2	2	
8	13740-83030	.VALVE, warm air	1	1	
9	02112-06164	.SCREW	2	2	
10	08321-21064	.LOCK WASHER	2	2	
11	08322-21064	.WASHER	2	2	
12	13748-83030	.ACTUATOR, warm air valve	1	1	
13	13715-82110	.VALVE, check	1	1	
14	13749-82111	.SENSOR ASSY, thermo	1	1	
15	13818-82000	.GASKET, thermo sensor	1	1	
16	13819-83000	.CLAMP, thermo sensor	1	1	
17	09343-03087	.HOSE	1	1	
18	09343-03101	.HOSE	1	1	
19	09343-03103	.HOSE	1	1	
20	01517-06203	BOLT	1	1	
21	08316-16063	NUT	2	2	
22	13830-83012	CASE, air intake	1	1	
23	13885-83010	SEAL, intake case	1	1	
24	09320-09034	CUSHION, case	1	1	
25	09169-06057	WASHER, case	1	1	
26	08316-16063	NUT	1	1	
27	13881-83011	HOSE, air cleaner outlet	1	1	
28	13891-83002	CLAMP, outlet hose	1	1	
29	09402-82202	CLAMP, outlet hose	1	1	
30	13747-83000	COMPENSATOR, hot idle	1	1	
31	13714-80030	PACKING, compensator	1	1	
32	02112-04083	SCREW	1	1	

FIG.16

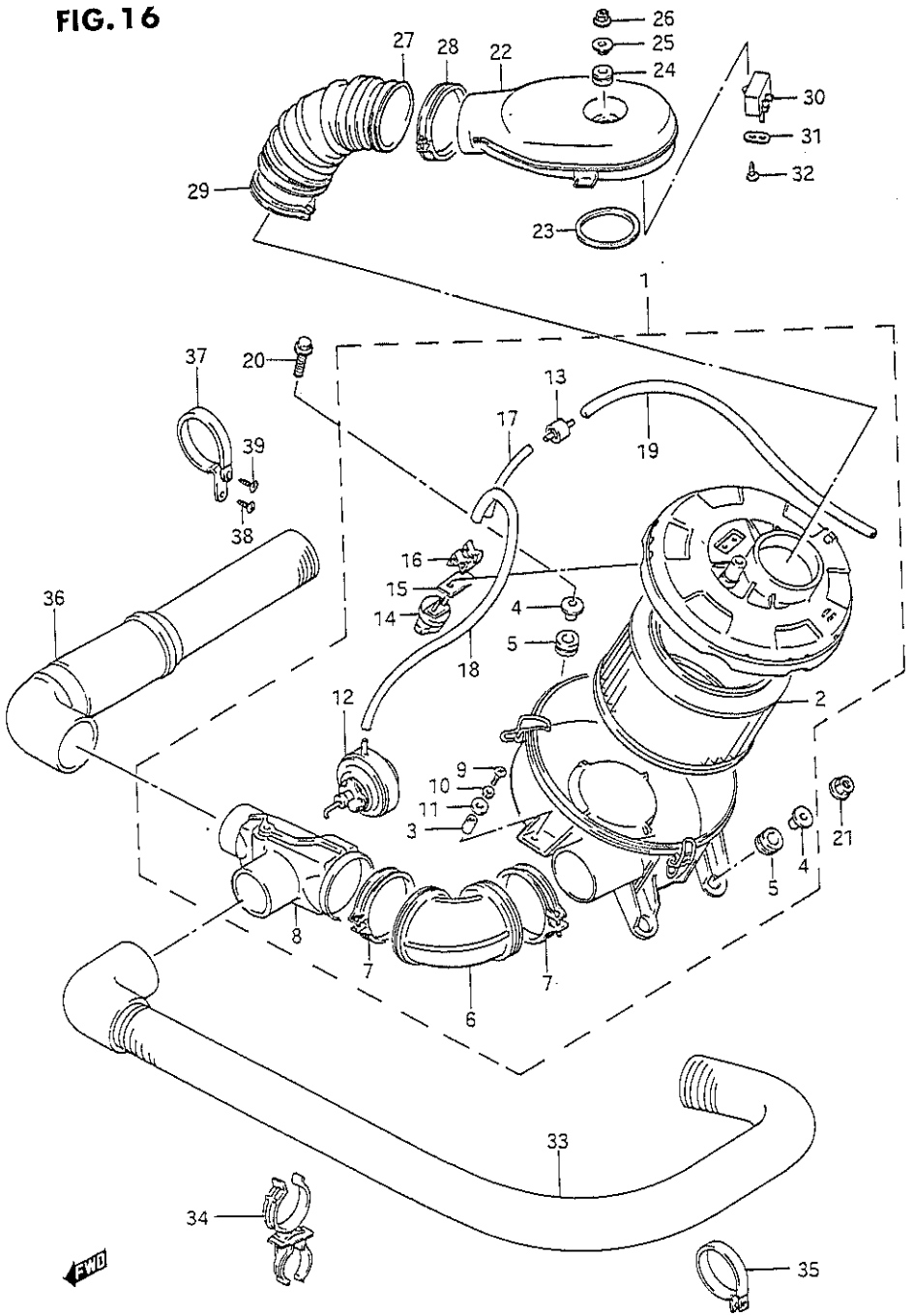

FIG.16 (1-C-12) AIR CLEANER (E17,E18 AND E39:W/CATALYZER)

REF.NO.	PART NO.	DESCRIPTION	Q'TY Q/W	Q'TY V	REMARKS
33	13840-83000	HOSE, warm air	1	1	
34	13860-83000	CLAMP, warm air hose	1	1	
35	09403-48401	CLAMP, warm air hose	1	1	
36	13870-83000	HOSE, cool air	1	1	
37	13896-83000	CLAMP, cool air hose	1	1	
38	02142-06123	SCREW	1	1	
39	03141-05106	SCREW	1	1	

FIG. 17

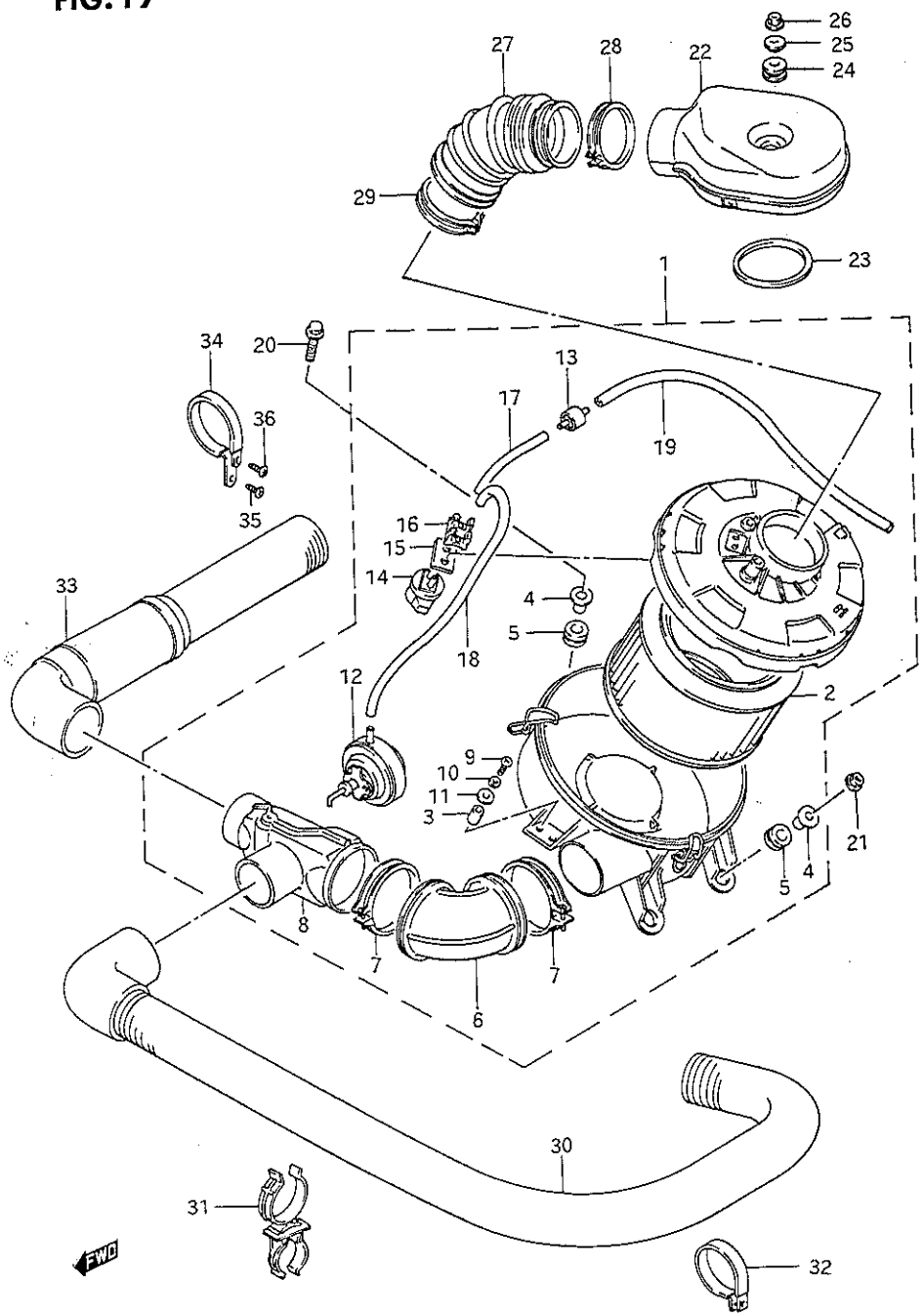

FIG.17 (1-C-13) AIR CLEANER (E22,E25:W/CATALYZER)

REF.NO.	PART NO.	DESCRIPTION	Q'TY Q	V	REMARKS
1	13700-83030	CLEANER ASSY, air	1	1	
2	13780-83000	.FILTER	1	1	
3	13712-83000	.SPACER	2	2	
4	13812-83001	.SPACER	3	3	
5	13813-83000	.GROMMET	3	3	
6	13731-83000	.JOINT	1	1	
7	09402-70207	.CLAMP	2	2	
8	13740-83030	.VALVE, warm air	1	1	
9	02112-06164	.SCREW	2	2	
10	08321-21064	.LOCK WASHER	2	2	
11	08322-21064	.WASHER	2	2	
12	13748-83030	.ACTUATOR, warm air valve	1	1	
13	13715-82110	.VALVE, check	1	1	
14	13749-82111	.SENSOR ASSY, thermo	1	1	
15	13818-82000	.GASKET, thermo sensor	1	1	
16	13819-83000	.CLAMP, thermo sensor	1	1	
17	09343-03089	.HOSE (L:80)	1	1	
18	09343-03100	.HOSE (L:220)	1	1	
19	09343-03103	.HOSE (L:340)	1	1	
20	01517-06203	BOLT	1	1	
21	08316-16063	NUT	2	2	
22	13830-83001	CASE, air intake	1	1	
23	13885-83000	SEAL, air intake case	1	1	
24	09320-09034	CUSHION, case	1	1	
25	09169-06057	WASHER, case	1	1	
26	08316-16063	NUT	1	1	
27	13881-83001	HOSE, air cleaner outlet	1	1	
28	09402-68202	CLAMP	1	1	
29	09402-82202	CLAMP	1	1	
30	13840-83000	HOSE, warm air	1	1	
31	13860-83000	CLAMP, warm air hose	1	1	
32	09403-48401	CLAMP, warm air hose	1	1	
33	13870-83000	HOSE, cool air	1	1	
34	13896-83000	CLAMP, cool air hose	1	1	
35	02142-06123	SCREW	1	1	
36	03141-05106	SCREW	1	1	

SJ413-4 E1

FIG.18

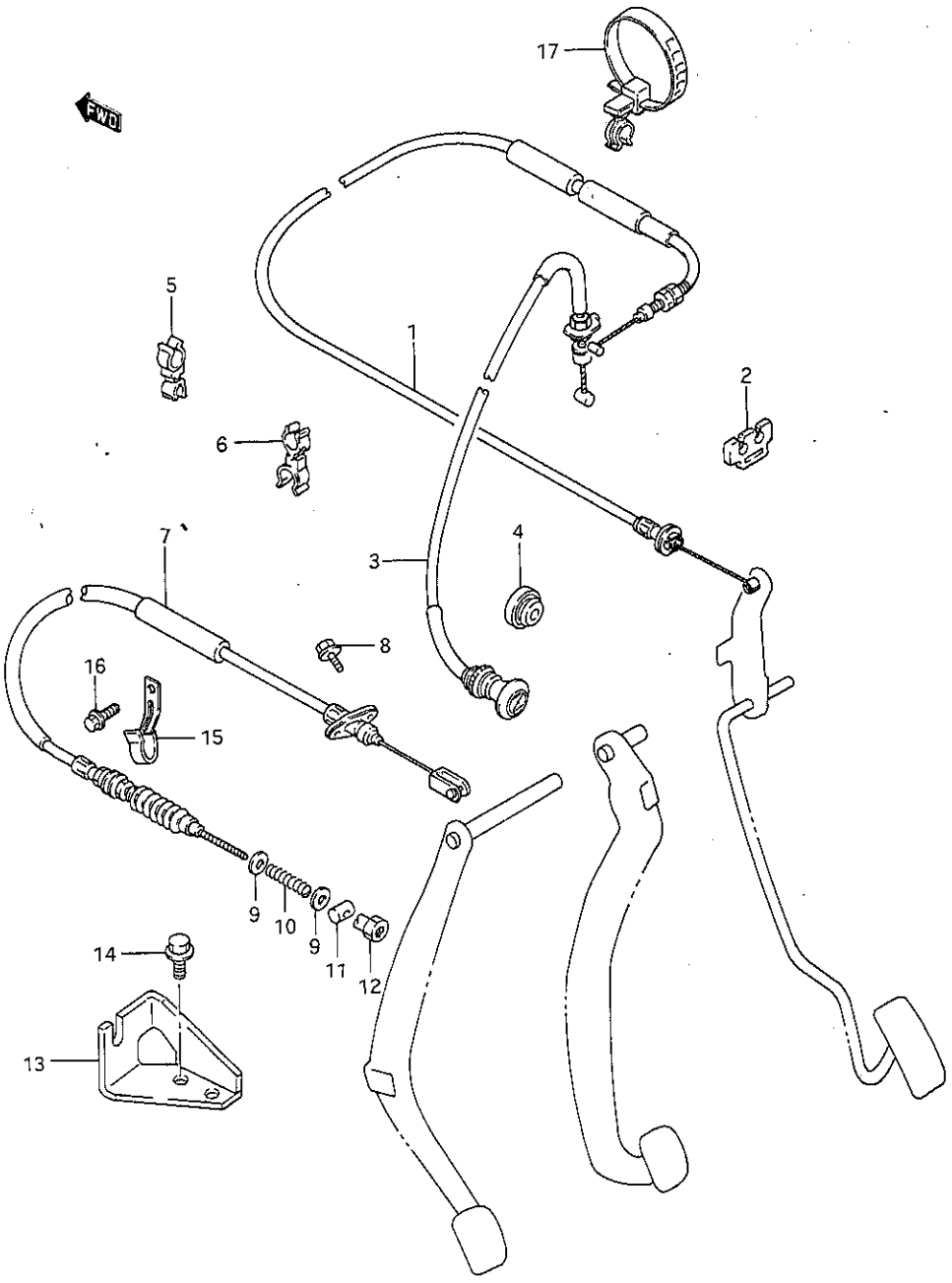

FIG.18 (1-C-14) CONTROL CABLE

REF.NO.	PART NO.	DESCRIPTION	Q'TY Q/W	Q'TY V	REMARKS
1-1	15910-83010	CABLE ASSY, accel	1	1	LHD
1-2	15910-83000	CABLE ASSY, accel	1	1	RHD
1-3	15910-83300	CABLE ASSY, accel	1	1	E17,E18 E39:W/catalyzer
2	15991-83000	CLAMP, accel cable	1	1	LHD
3-1	15930-83010	CABLE ASSY, choke	1	1	LHD
3-2	15930-83000	CABLE ASSY, choke	1	1	RHD
4	15939-83000	PLUG, choke cable	1	1	E2,E6,E15,E16,E17,E18, E19,E22,E25,E30,E34,E35 E39,E41,E43,E54,E68,E98
5	09408-00049	CLIP	1	1	LHD
6	09408-00085	CLIP	1	1	E17,E18 E39:W/catalyzer
7-1	23710-83023	CABLE ASSY, clutch	1	1	LHD
7-2	23710-83012	CABLE ASSY, clutch	1	1	RHD
8	01517-06163	BOLT	2	2	
9	08322-21063	WASHER	2	2	
10	09440-08026	SPRING	1	1	
11	09209-13018	PIN	1	1	
12	09150-06010	NUT	1	1	
13	23911-83001	BRACKET, clutch cable	1	1	
14	01517-10203	BOLT	2	2	
15	23915-83000	CLAMP	1	1	LHD
16	01517-06103	BOLT	1	1	LHD
17	09403-12310	CLAMP	1	1	RHD

SJ413-4 E1

FIG.19

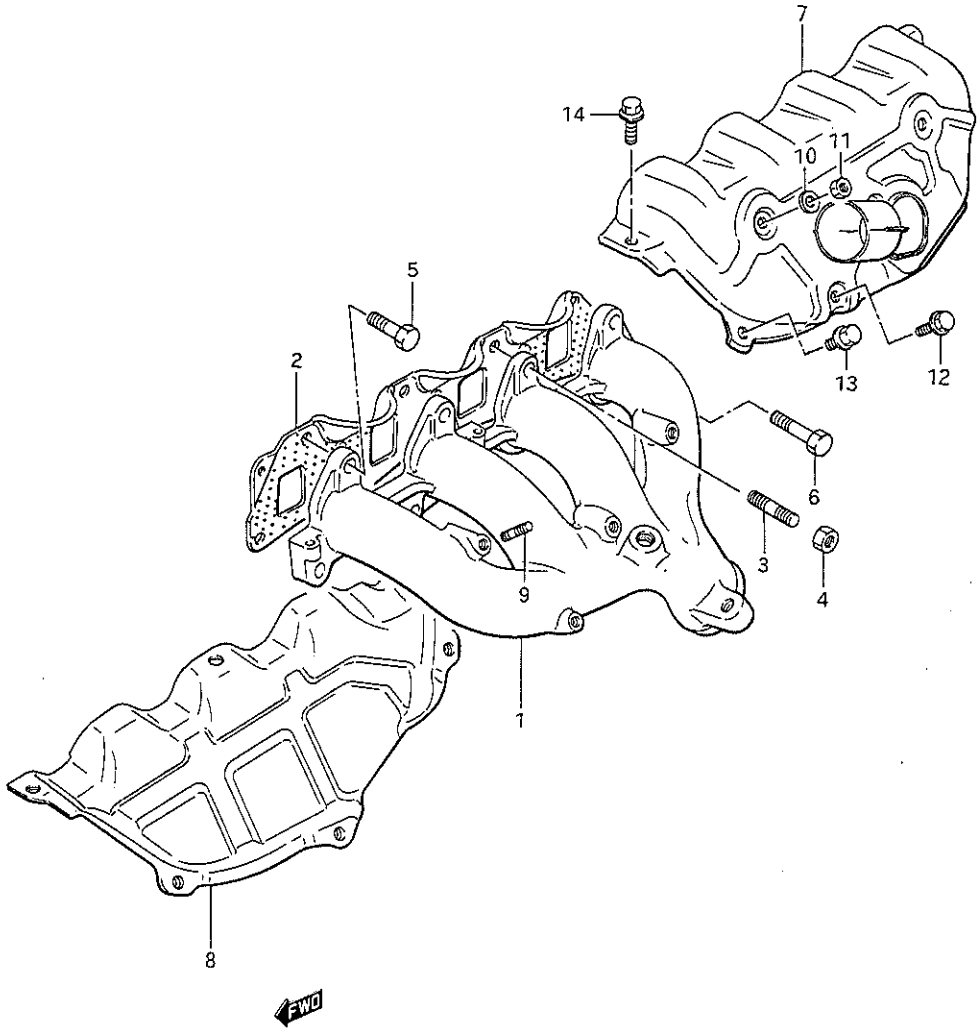

FIG.19 (1-D- 2) EXHAUST MANIFOLD

REF.NO.	PART NO.	DESCRIPTION	Q'TY Q/W	Q'TY V	REMARKS
1	14111-83003	MANIFOLD, exhaust	1	1	
2	14140-83000	GASKET, manifold	1	1	
3	01411-08253	STUD BOLT	2	2	
4	08310-11083	NUT	2	2	
5	01107-08253	BOLT	5	5	
6	01107-08356	BOLT	1	1	
7-1	14120-83003	COVER, manifold upper	1	1	W/warm air
7-2	14121-83023	COVER, manifold upper	1	1	N/warm air
8	14130-83002	COVER, manifold lower	1	1	
9	01411-06123	STUD BOLT	2	2	
10	08322-21063	WASHER	2	2	
11	08310-11063	NUT	2	2	
12	01537-06102	BOLT	2	2	
13	01517-06103	BOLT	3	3	
14	01517-06302	BOLT	3	3	

Note : E17,E18 and E39 (W/catalyzer) see next fig.

FIG. 20

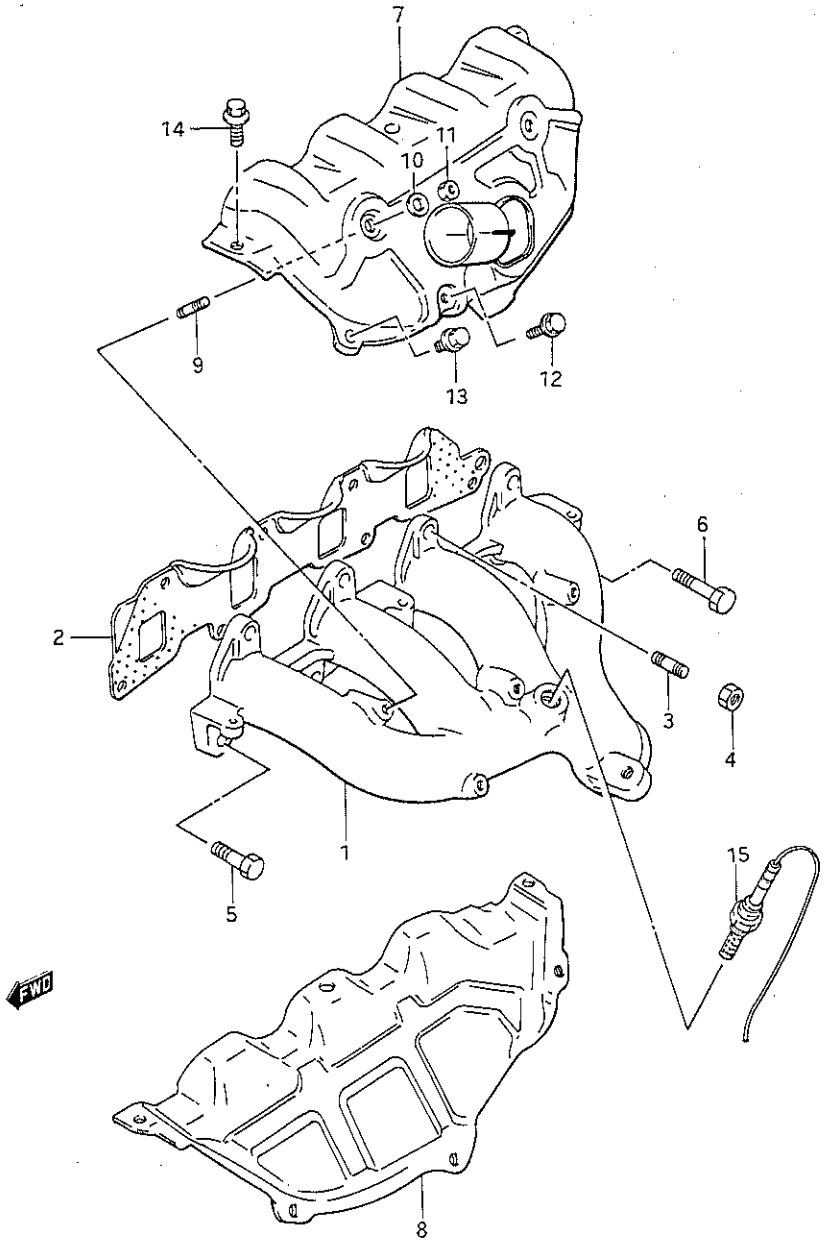

FIG.20 (1-D- 3) EXHAUST MANIFOLD (E17,E18 AND E39:W/CATALYZER)

REF.NO.	PART NO.	DESCRIPTION	Q'TY Q/W	Q'TY V	REMARKS
1	14111-83013	MANIFOLD, exhaust	1	1	
2	14140-83000	GASKET, manifold	1	1	
3	01411-08253	STUD BOLT	2	2	
4	08310-11083	NUT	2	2	
5	01107-08253	BOLT	5	5	
6	01107-08356	BOLT	1	1	
7	14120-83011	COVER, manifold upper	1	1	
8	14130-83002	COVER, manifold lower	1	1	
9	01411-06123	STUD BOLT	2	2	
10	08322-21063	WASHER	2	2	
11	08310-11063	NUT	2	2	
12	01537-06102	BOLT	2	2	
13	01517-06103	BOLT	3	3	
14	01517-06302	BOLT	3	3	
15	18213-83000	SENSOR, oxygen	1	1	

SJ413-4 E1

FIG. 21

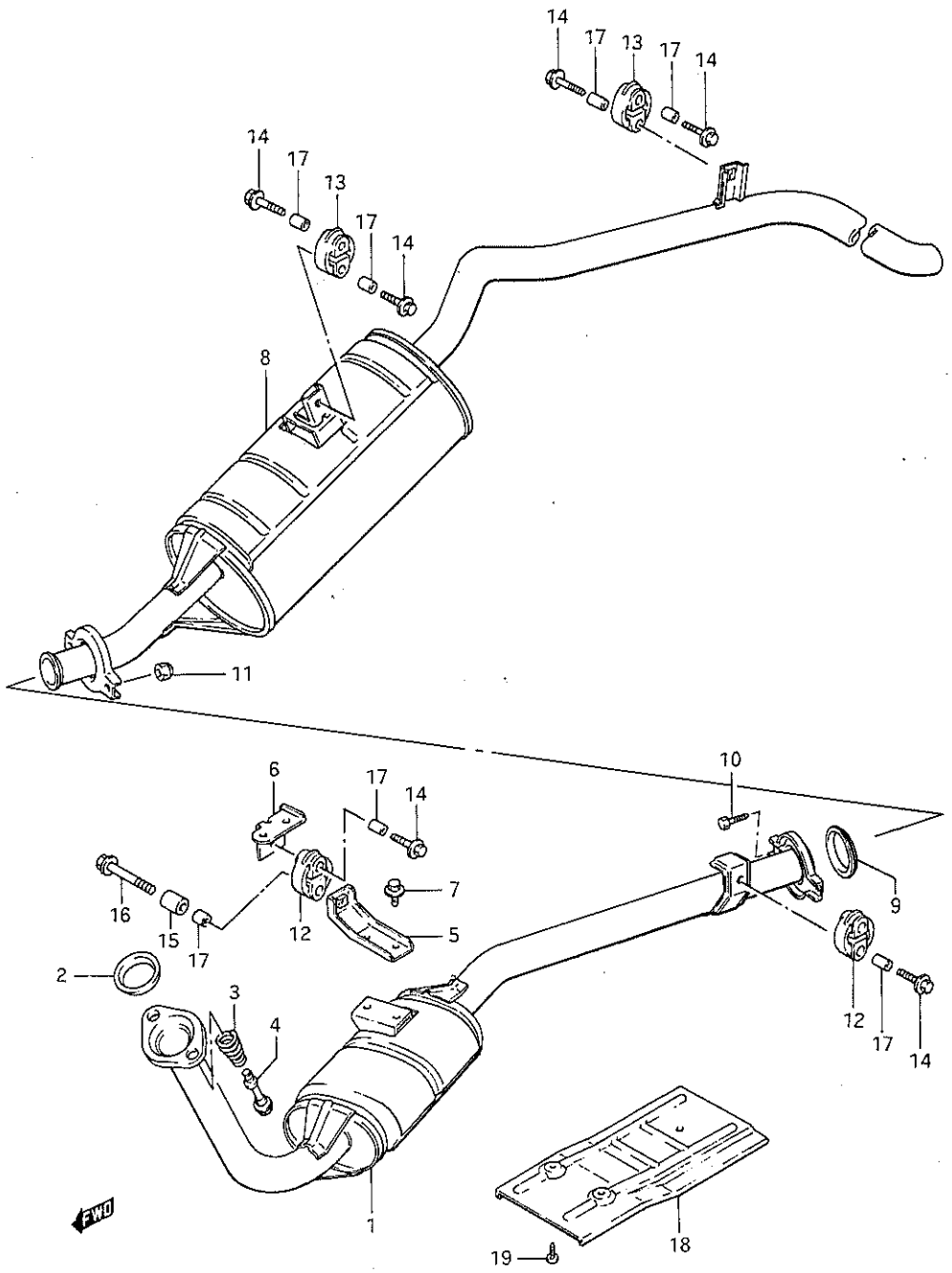

FIG.21 (1-D- 4) MUFFLER

REF.NO.	PART NO.	DESCRIPTION	Q'TY Q/W	Q'TY V	REMARKS
1	14150-83002	PIPE, exhaust center	1	1	
2	14183-82601	SEAL RING, exhaust pipe	1	1	
3	14492-82600	SPRING	2	2	
4	09119-10041	BOLT	2	2	
5	14284-83002	BRACKET, exhaust pipe No.1	1	1	
6	14285-83010	BRACKET, exhaust pipe No.2	1	1	
7	01537-08123	BOLT	2	2	
8-1	14300-83300	MUFFLER	1	1	Q,V
8-2	14300-83310	MUFFLER	1	1	Q,V E2,E6,E15,E16,E19,E30, E34,E35,E54,E68
8-3	14300-83310	MUFFLER	1	1	Q,V E22,E25,E39:N/catalyzer
8-4	14300-83401	MUFFLER	1	-	W
8-5	14300-83411	MUFFLER	1	-	W E2,E6,E15,E16,E19,E22, E25,E34,E54
8-6	14300-83411	MUFFLER	1	-	W E39:N/catalyzer
9	14699-83000	GASKET, muffler joint	1	1	
10	01107-08253	BOLT	2	2	
11	09159-08022	NUT	2	2	
12	14281-78010	MOUNTING, center pipe	2	2	
13	14281-79010	MOUNTING, muffler	2	2	
14	01517-08353	BOLT	7	7	
15	14287-83000	SPACER, mounting bolt	1	1	
16	01517-08553	BOLT	1	1	
17	09180-08057	SPACER (8.2x12.5x23.5)	8	8	
18	14231-80010	PANEL, heat protector	1	1	
19	03141-06123	SCREW	3	3	

Note : E17,E18 AND E22,E25,E39 (W/catalyzer) See next fig.

SJ413-4 E1

FIG. 22

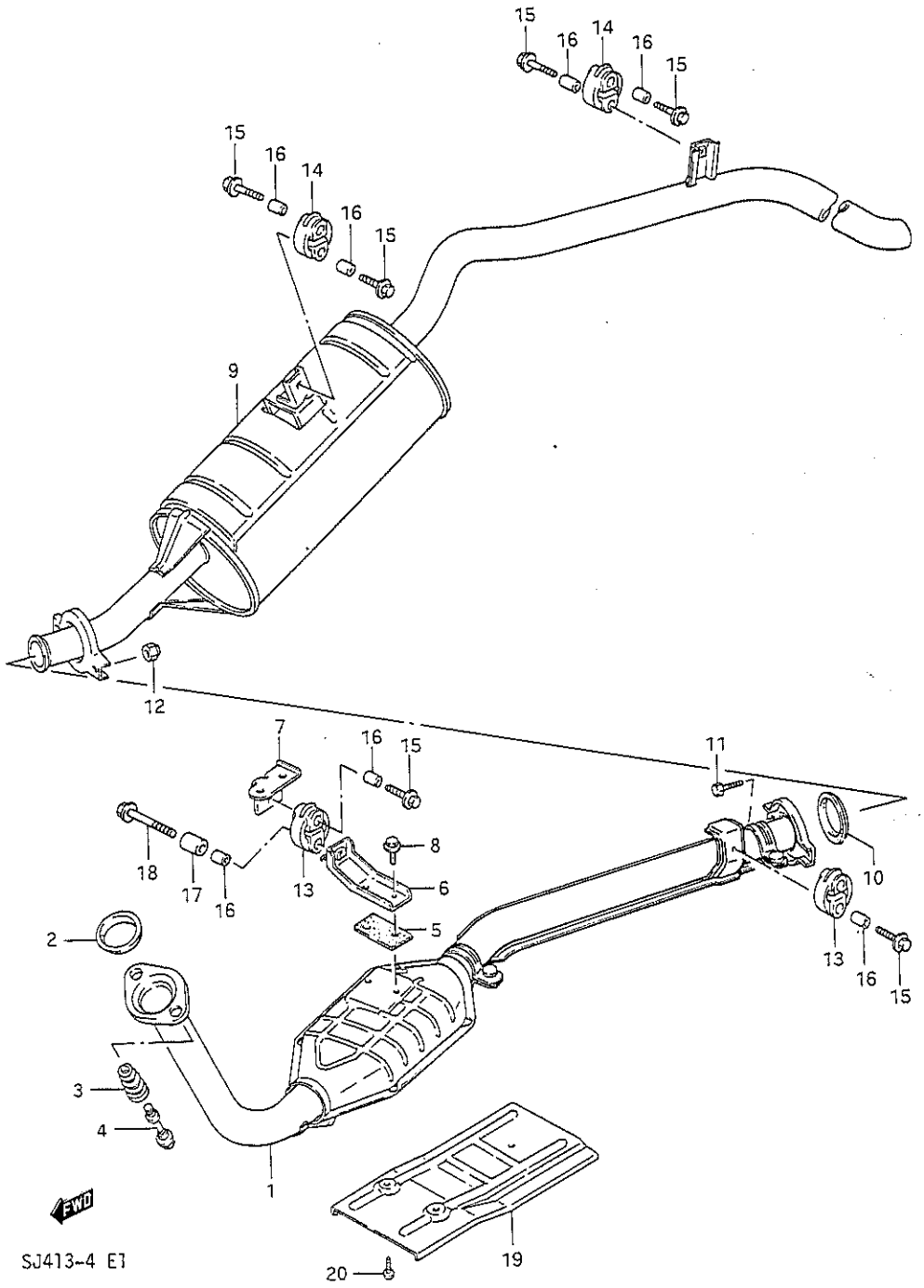

SJ413-4 E1

FIG.22 (1-0- 5) MUFFLER (E17,E18 AND E22,E25,E39:W/CATALYZER)

REF.NO.	PART NO.	DESCRIPTION	Q'TY Q/W	Q'TY V	REMARKS
1-1	14150-83015	PIPE, exhaust center	1	1	E17,E18,E39
1-2	14150-83032	PIPE, exhaust center	1	1	E22,E25
2	14183-82601	SEAL RING, exhaust pipe	1	1	
3	14492-82600	SPRING	2	2	
4	09119-10041	BOLT	2	2	
5	14283-83000	INSULATOR, exhaust bracket	1	1	
6	14284-83002	BRACKET, exhaust pipe No.1	1	1	
7	14285-83010	BRACKET, exhaust pipe No.2	1	1	
8	01517-08163	BOLT	2	2	
9-1	14300-83310	MUFFLER	1	1	Q,V
9-2	14300-83411	MUFFLER	1	-	W
10	14699-83000	GASKET, muffler joint	1	1	
11	01107-08253	BOLT	2	2	
12	09159-08022	NUT	2	2	
13	14281-78010	MOUNTING, center pipe	2	2	
14	14281-79010	MOUNTING, muffler	2	2	
15	01517-08353	BOLT	7	7	
16	09180-08057	SPACER (8.2x12.5x23.5)	8	8	
17	14287-83000	SPACER, mounting bolt	1	1	
18	01517-08553	BOLT	1	1	
19	14231-80010	PANEL, heat protector	1	1	
20	03141-06123	SCREW	3	3	

SJ413-4 E1

FIG. 23

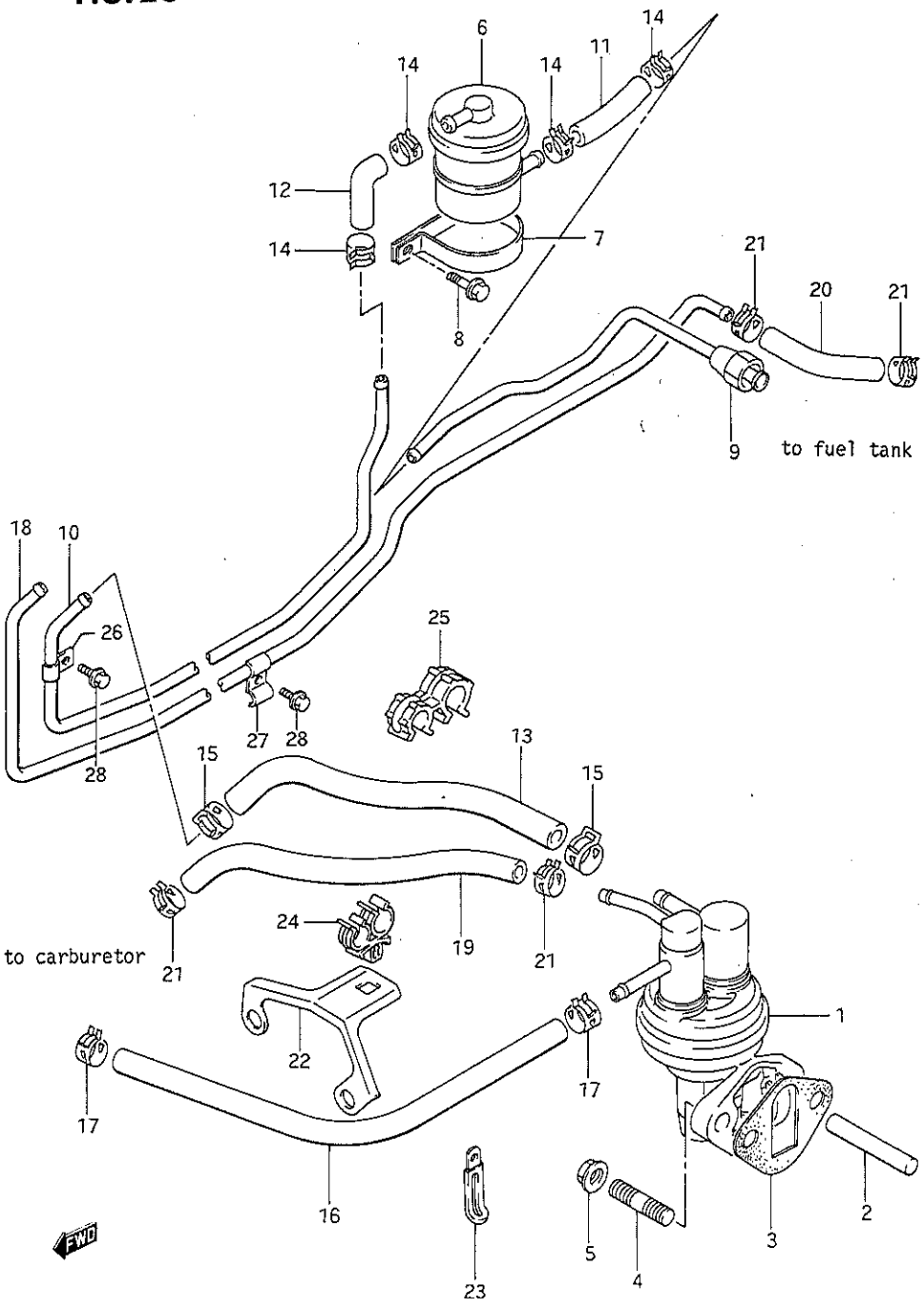

SJ413-4 E1

FIG.23 (1-0- 6) FUEL PUMP

REF.NO.	PART NO.	DESCRIPTION	Q'TY Q/W	Q'TY V	REMARKS
1-1	15100-83000	PUMP ASSY, fuel	1	1	
1-2	15100-83010	PUMP ASSY, fuel	1	1	E17,E18 E39:W/catalyzer
2	15315-82000	ROD, fuel pump	1	1	
3	15319-73001	GASKET	1	1	
4	01421-08253	STUD BOLT	2	2	
5	08316-16083	NUT	2	2	
6	15410-79100	FILTER, fuel	1	1	
7	09403-51407	CLAMP	1	1	
8	01517-06123	BOLT	1	1	
9-1	15810-80011	PIPE, tank to filter	1	1	Q,V
9-2	15810-80021	PIPE, tank to filter	1	-	Q:E6
9-3	15810-80311	PIPE, tank to filter	1	-	W
9-4	15810-80321	PIPE, tank to filter	1	-	W:E6
10-1	15821-83310	PIPE, filter to pump	1	1	
10-2	15821-83320	PIPE, filter to pump	1	1	E6
11	09343-07050	HOSE, pipe to filter	1	1	L:810→95
12	09343-07050	HOSE, filter to pipe	1	1	L:810→120
13	15840-83002	HOSE, pipe to pump	1	1	
14	09401-11405	CLIP	4	4	
15	09401-13407	CLIP	2	2	
16-1	15830-83001	HOSE, pump to carburetor	1	1	
16-2	15830-83001	HOSE, pump to carburetor	1	1	E17,E18 E39:W/catalyzer L:400→360
17	09401-10404	CLIP	2	2	
18-1	15861-83350	PIPE, fuel return	1	1	Q,V
18-2	15861-83360	PIPE, fuel return	1	1	Q:E6
18-3	15861-83510	PIPE, fuel return	1	-	W
18-4	15861-83520	PIPE, fuel return	1	-	W:E6
19	15870-83002	HOSE, pump to pipe	1	1	
20	09356-42115-150	HOSE, pipe to tank	1	1	L:150→125
21	09401-10404	CLIP	4	4	

Note : E9 See next fig.

SJ413-4 F1

FIG. 23

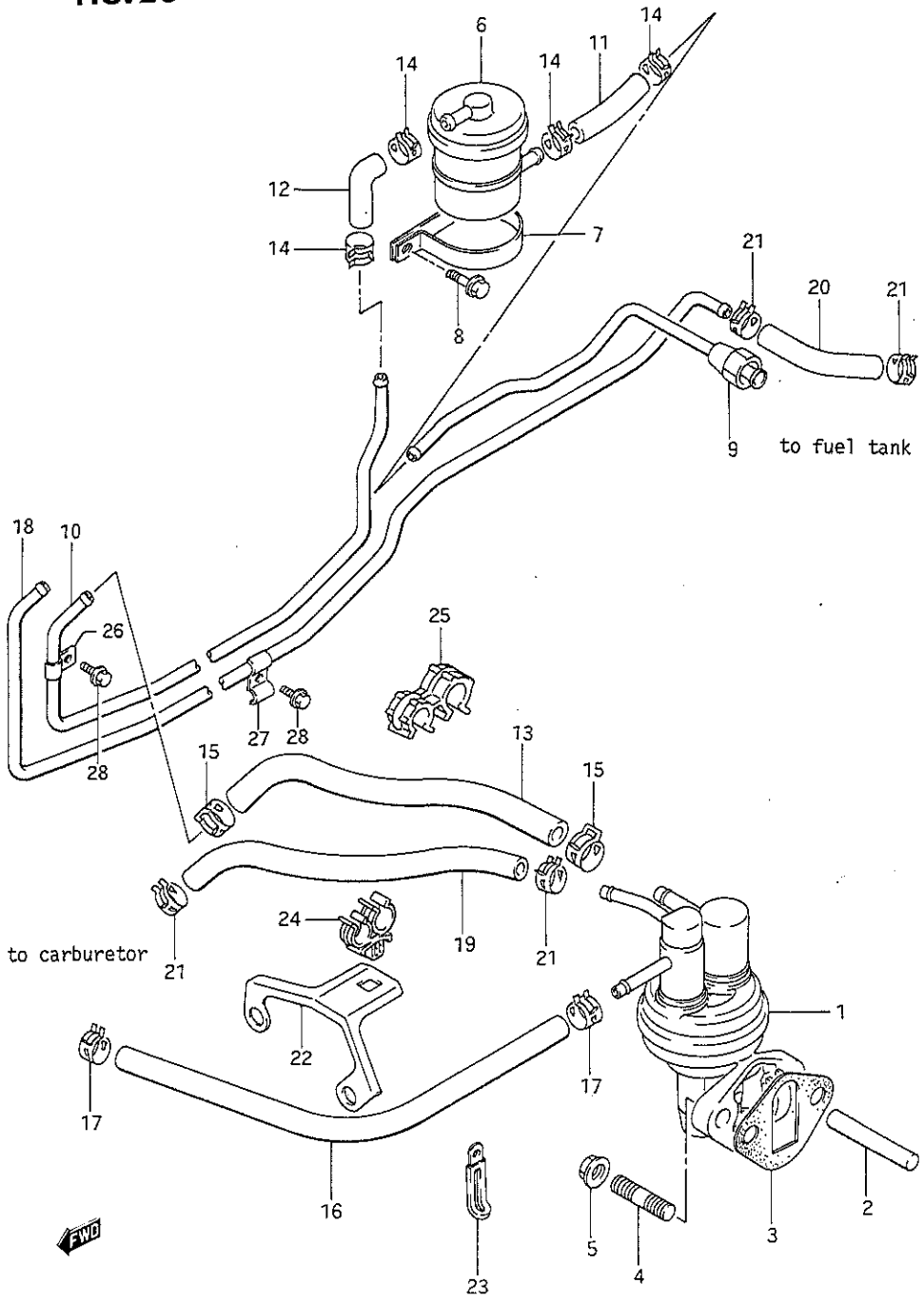

SJ413-4 E1

FIG.23 (1-D- 7) FUEL PUMP

REF.NO.	PART NO.	DESCRIPTION	Q'TY Q/W	Q'TY V	REMARKS
22	15881-83002	BRACKEl, fuel hose clamp	1	1	
23	09404-08404	CLAMP, hose	1	1	
24	09408-00090	CLAMP, hose	1	1	
25	09408-00083	CLAMP, hose	1	1	
26-1	09403-08309	CLAMP, fuel pipe	4	4	Q,V
26-2	09403-08309	CLAMP, fuel pipe	5	-	W
27	15819-78000	CLAMP, return pipe	7	7	
28-1	09132-06006	SCREW	11	11	Q,V
28-2	09132-06006	SCREW	12	-	W

SJ413-4 E1

FIG. 24

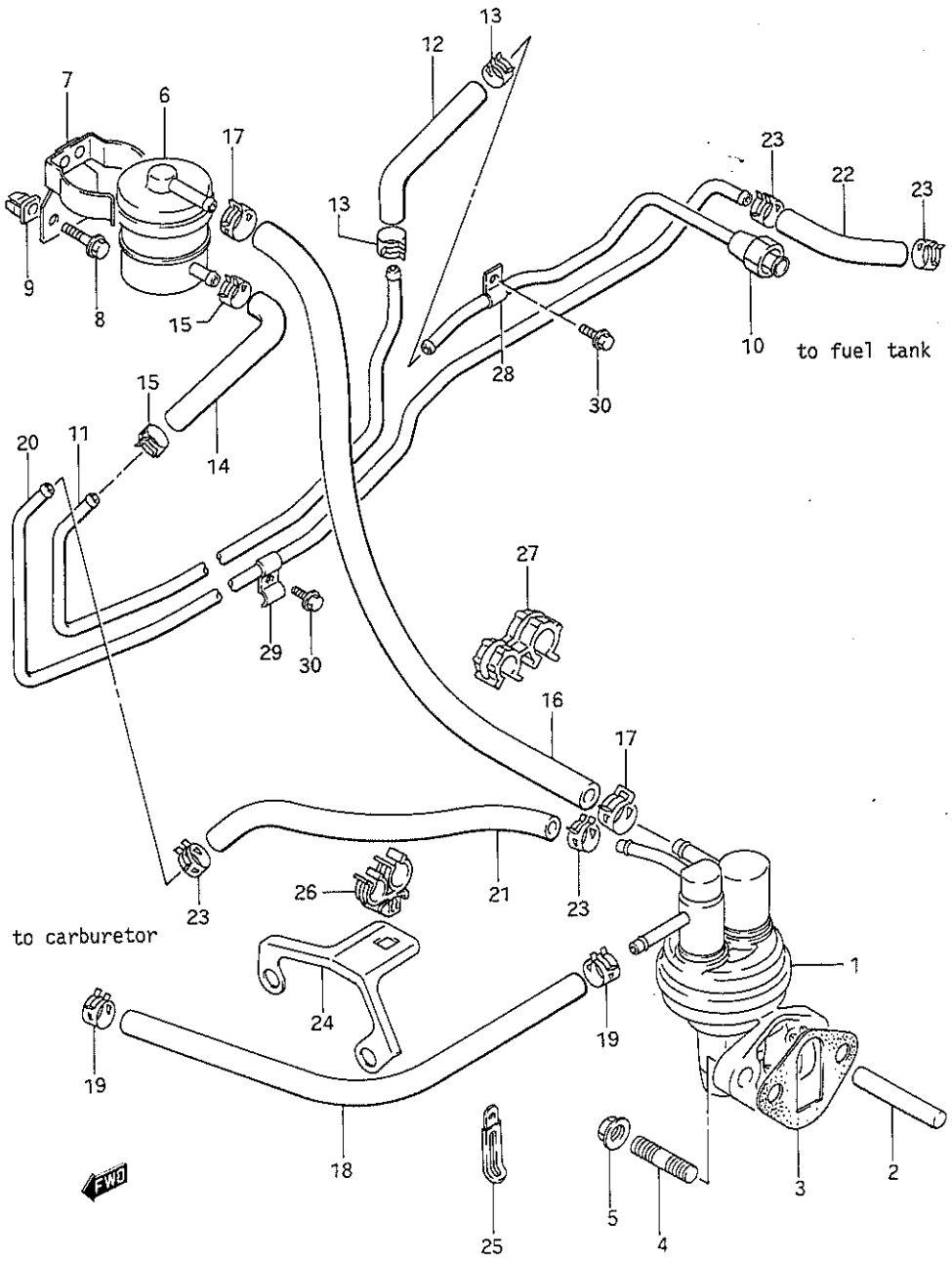

SJ413-4 E1

FIG.24 (1-D- 8) FUEL PUMP (E9)

REF.NO.	PART NO.	DESCRIPTION	Q'TY Q/W	REMARKS
1	15100-83000	PUMP ASSY, fuel	1	
2	15315-82000	ROD, fuel pump	1	
3	15319-73001	GASKET	1	
4	01421-08253	STUD BOLT	2	
5	08316-16083	NUT	2	
6	15410-80200	FILTER, fuel	1	
7	15420-80001	BRACKET, fuel filter	1	
8	01517-06123	BOLT	2	
9	09148-06006	NUT	2	
10-1	15810-80011	PIPE, tank to pipe	1	Q
10-2	15810-80311	PIPE, tank to pipe	1	W
11	15821-83310	PIPE, pipe to filter	1	
12	09343-07050	HOSE, pipe to pipe	1	L:810→280
13	09401-13407	CLIP	2	
14	09356-76145-150	HOSE, pipe to filter	1	
15	09401-12407	CLIP	2	
16	15840-83011	HOSE, filter to pump	1	
17	09401-11405	CLIP	2	
18	15830-83001	HOSE, pump to carburetor	1	
19	09401-10404	CLIP	2	
20-1	15861-83350	PIPE, fuel return	1	Q
20-2	15861-83510	PIPE, fuel return	1	W
21	15870-83002	HOSE, pump to pipe	1	
22	09356-42115-150	HOSE, pipe to tank	1	L:150→125
23	09401-10404	CLIP	4	
24	15881-83002	BRACKET, fuel hose clamp	1	
25	09404-08404	CLAMP, hose	1	
26	09408-00090	CLAMP, hose	1	
27	09408-00083	CLAMP, hose	1	
28-1	09403-08309	CLAMP, fuel pipe	4	Q
28-2	09403-08309	CLAMP, fuel pipe	5	W
29	15819-78000	CLAMP, return pipe	7	
30-1	09132-06006	SCREW	11	Q
30-2	09132-06006	SCREW	12	W

SJ413-4 E1

FIG. 25

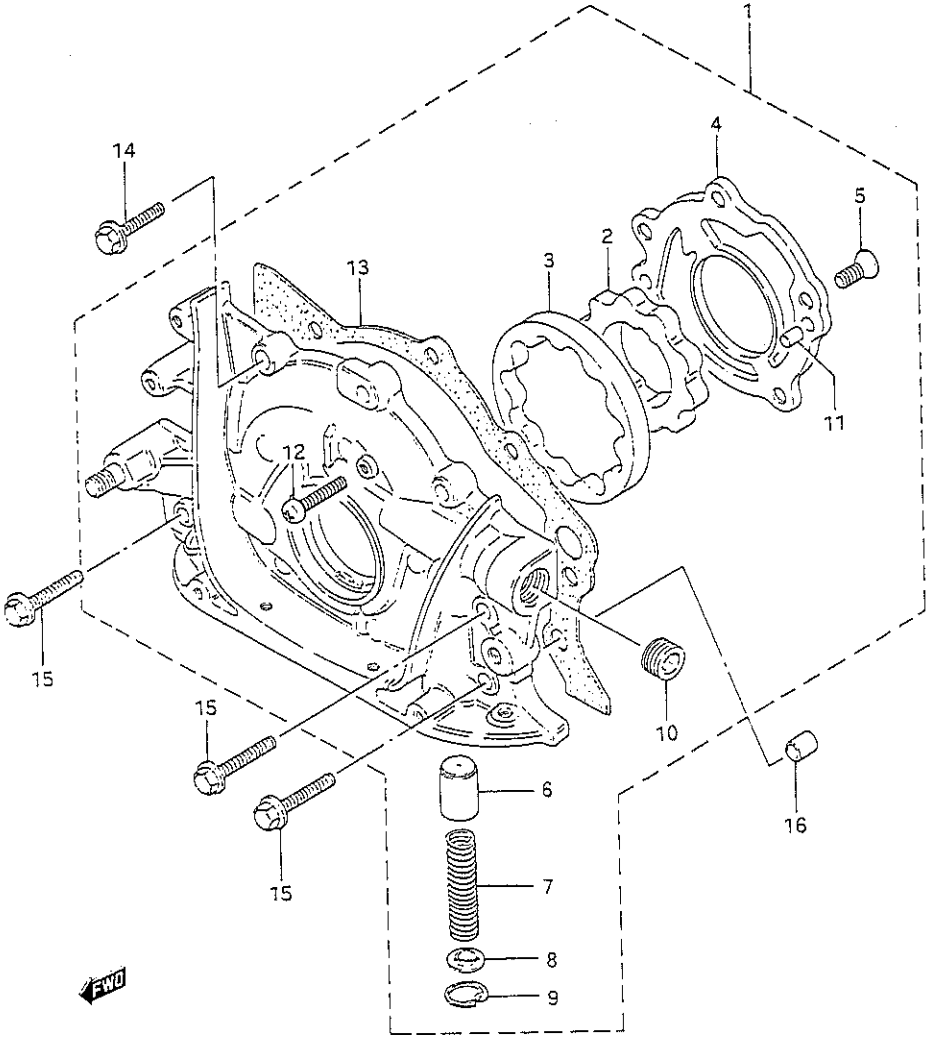

FIG.25 (1-D- 9) OIL PUMP

REF.NO.	PART NO.	DESCRIPTION	Q'TY Q/W	Q'TY V	REMARKS
1	16100-82822	PUMP ASSY, oil	1	1	
2	16131-82600	.GEAR, inner	1	1	
3	16132-82600	.GEAR, outer	1	1	
4	16161-82601	.PLATE, gear	1	1	
5	02122-06148	.SCREW	5	5	
6	16151-78100	.VALVE, relief	1	1	
7	16152-78100	.SPRING, relief valve	1	1	
8	16153-78100	.RETAINER, relief valve spring	1	1	
9	08331-41159	.CIRCLIP	1	1	
10	16171-78100	.PLUG, oil pump	2	2	
11	16173-78100	.PIN, oil pump	2	2	
12	02112-06256	.SCREW, tensioner	1	1	
13	16119-82000	.GASKET, oil pump	1	1	
14	01517-06253	BOLT	4	4	
15	01517-06353	BOLT	3	3	
16	04211-09109	PIN	2	2	

SJ413-4 E1

FIG. 26

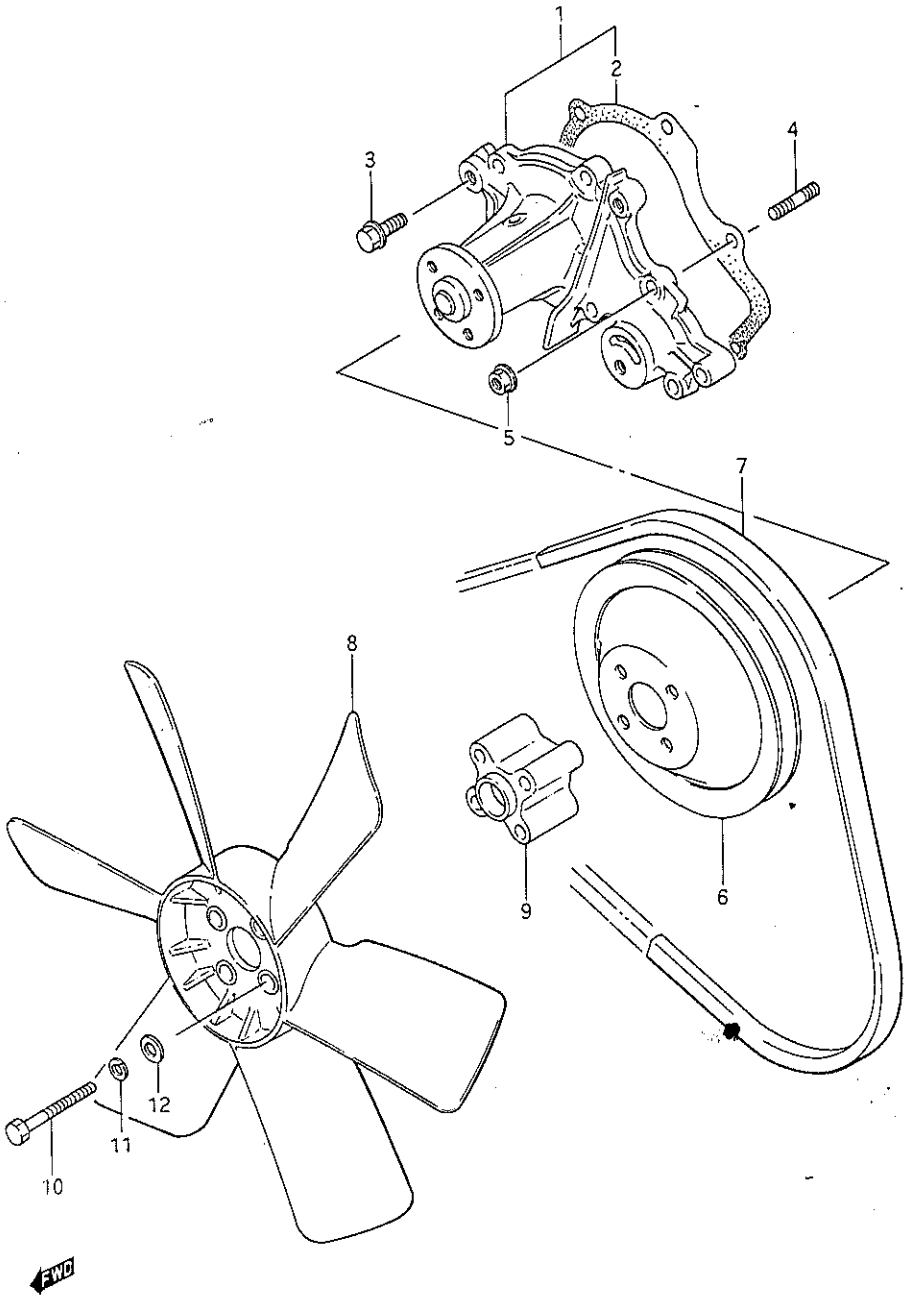

SJ413-4 E1

FIG.26 (1-D-10) WATER PUMP

REF.NO.	PART NO.	DESCRIPTION	Q'TY Q/W	Q'TY V	REMARKS
1-1	17400-82811	PUMP ASSY, water	1	1	
1-2	17400-83810	PUMP ASSY, water	1	1	E43
2	17431-82000	.GASKET, water pump	1	1	
3	09103-06066	BOLT (6x23)	4	4	
4	01421-06203	STUD BOLT	2	2	
5	08316-16063	NUT	2	2	
6	17511-82000	PULLEY, water pump	1	1	
7	17521-82030	BELT, water pump	1	1	
8-1	17111-73010	FAN, engine cooling	1	1	
8-2	17110-83010	FAN, engine cooling	1	1	E43
9	17131-80000	HUB, engine cooling fan	1	1	
10	01107-06503	BOLT	4	4	
11	08321-21063	LOCK WASHER	4	4	
12	08322-21063	WASHER	4	4	

Note : E2,E6,E15,E16,E17,E18,E19,E22,E25,E34,E39,E54,E68

See next fig.

SJ413-4 E1

FIG. 27

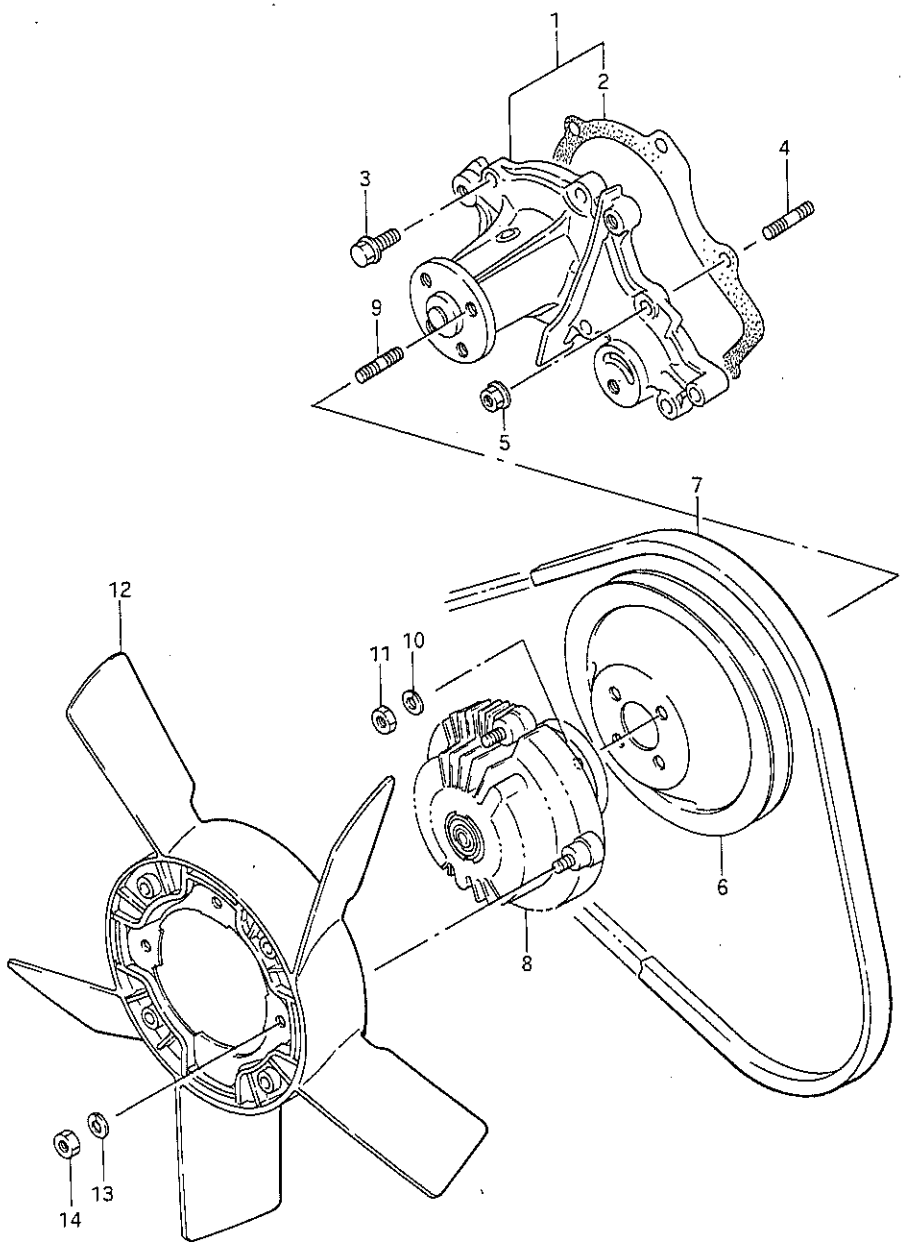

FIG.27 (1-D-11) WATER PUMP (E2,E6,E15,E16,E17,E18,E19,E22,E25,E34,E39,E54,E68)

REF.NO.	PART NO.	DESCRIPTION	Q'TY Q/W	Q'TY V	REMARKS
1	17400-83810	PUMP ASSY, water	1	1	
2	17431-82000	.GASKET, water pump	1	1	
3	09103-06066	BOLT (6x23)	4	4	
4	01421-06203	STUD BOLT	2	2	
5	08316-16063	NUT	2	2	
6	17511-82000	PULLEY, water pump	1	1	
7	17521-82030	BELT, water pump	1	1	
8	17120-83000	CLUTCH ASSY, fan	1	1	
9	01411-06203	STUD BOLT	4	4	
10	08321-21063	LOCK WASHER	4	4	
11	08310-11063	NUT	4	4	
12	17110-83000	FAN, engine cooling	1	1	
13	08321-21063	LOCK WASHER	4	4	
14	08310-11063	NUT	4	4	

SJ413-4 E1

FIG. 28

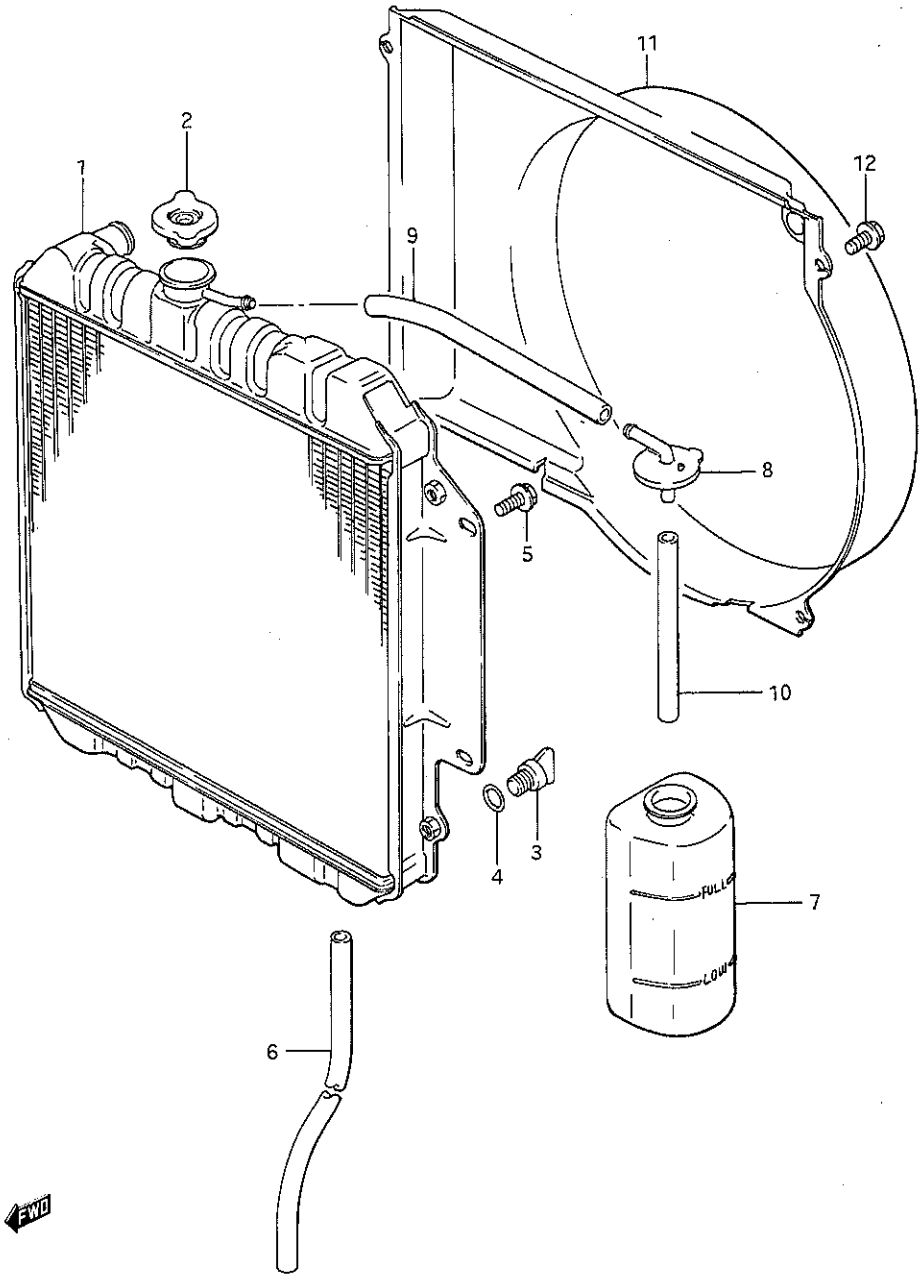

SJ413-4 E1

FIG.28 (1-D-12) RADIATOR

REF.NO.	PART NO.	DESCRIPTION	Q'TY Q/W	Q'TY V	REMARKS
1	17700-83001	RADIATOR ASSY	1	1	
2	17920-78120	.CAP	1	1	
3	17751-72010	.PLUG, drain	1	1	
4	17759-72010	.O RING	1	1	
5	01517-06103	BOLT	4	4	
6	09351-75111-180	HOSE, radiator drain	1	1	
7	17931-72000	TANK, water reservoir	1	1	
8	17932-78100	CAP	1	1	
9	09352-70121-13A	HOSE, radiator to tank	1	1	L:1130→265
10	09352-70121-13A	HOSE, reservoir tank	1	1	L:1130→170
11	17761-83000	SHROUD, fan	1	1	
12	01517-06103	BOLT	4	4	

SJ413-4 E1

FIG. 29

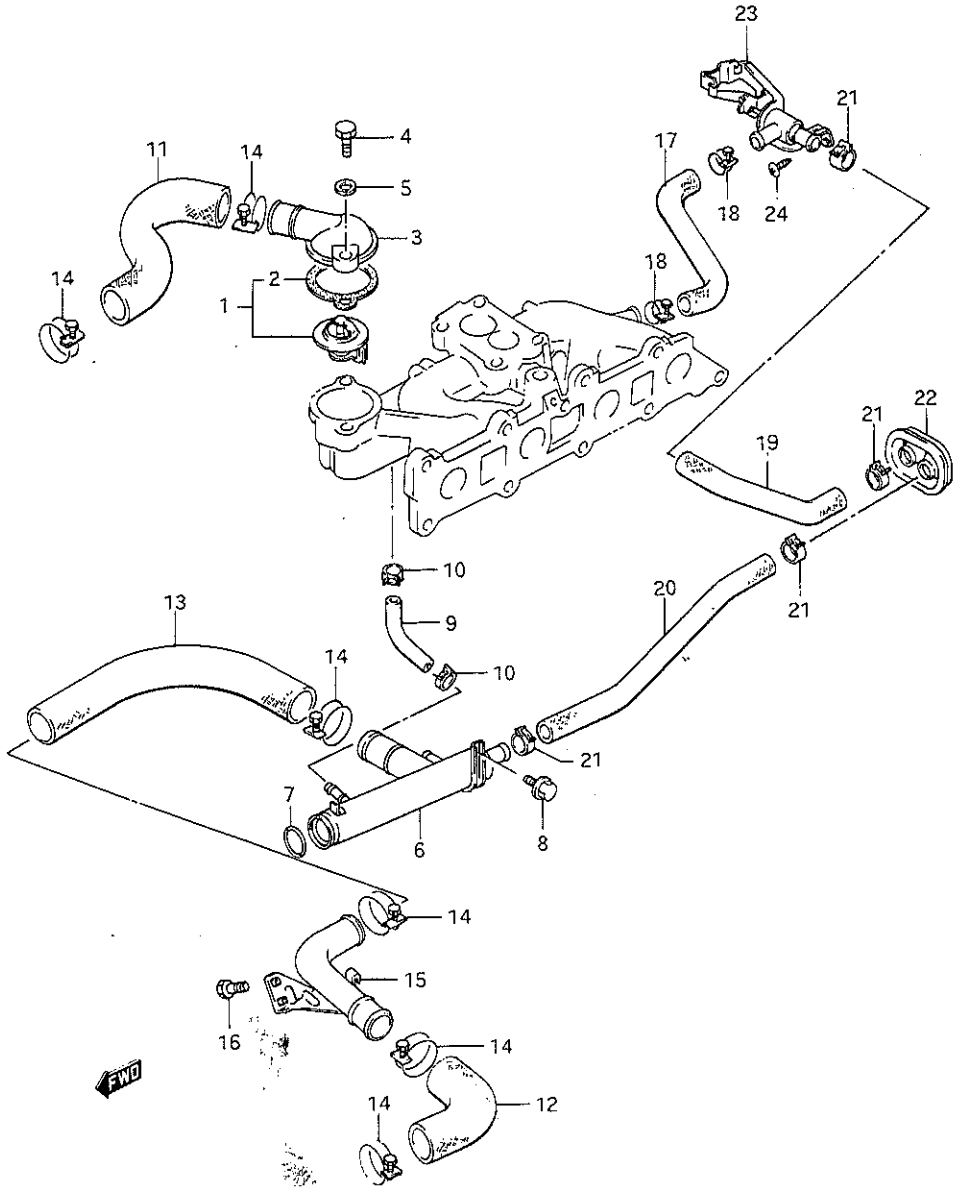

SJ413-4 E1

FIG.29 (1-D-13) WATER HOSE (LHD)

REF.NO.	PART NO.	DESCRIPTION	Q'TY Q/W	Q'TY V	REMARKS
1-1	17600-83821	THERMOSTAT, water (82°C)	1	1	
1-2	17600-83831	THERMOSTAT, water (88°C)	1	1	E15,E16,E17
2	17569-80000	.GASKET, cap	1	1	
3	17561-73000	CAP, thermostat	1	1	
4	01107-08303	BOLT	2	2	
5	08321-21083	LOCK WASHER	2	2	
6-1	17550-83001	PIPE, water inlet	1	1	W/heater
6-2	17550-83011	PIPE, water inlet	1	1	N/heater
6-3	17550-83021	PIPE, water inlet	1	1	W/heater E15,E16,E17,E18,E19, E22,E25,E34,E39,E43, E54
6-4	17550-83031	PIPE, water inlet	1	1	N/heater,E43
7	09280-28006	O RING	1	1	
8	01517-06103	BOLT	1	1	
9	17859-83001	HOSE, water bypass	1	1	
10	09401-12404	CLIP	2	2	
11	17841-83000	HOSE, radiator inlet	1	1	
12	17851-83000	HOSE, radiator outlet No.1	1	1	
13	17852-83000	HOSE, radiator outlet No.2	1	1	
14	09400-36311	CLAMP	6	6	
15	17860-83000	PIPE, radiator outlet	1	1	
16	01517-06123	BOLT	2	2	
17	17871-83010	HOSE, inlet to valve	1	1	W/heater
18	09400-22312	CLAMP	2	2	W/heater
19	17872-83010	HOSE, valve to heater	1	1	W/heater
20	17873-83000	HOSE, heater to inlet	1	1	W/heater
21	09401-20402	CLIP	4	4	W/heater
22-1	74812-83001	GROMMET, heater hose	1	1	W/heater
22-2	74812-80000	GROMMET, heater hose	1	1	N/heater
23	74710-83020	VALVE, water	1	1	W/heater
24	03241-06126	SCREW	2	2	W/heater

SJ413-4 E1

FIG. 30

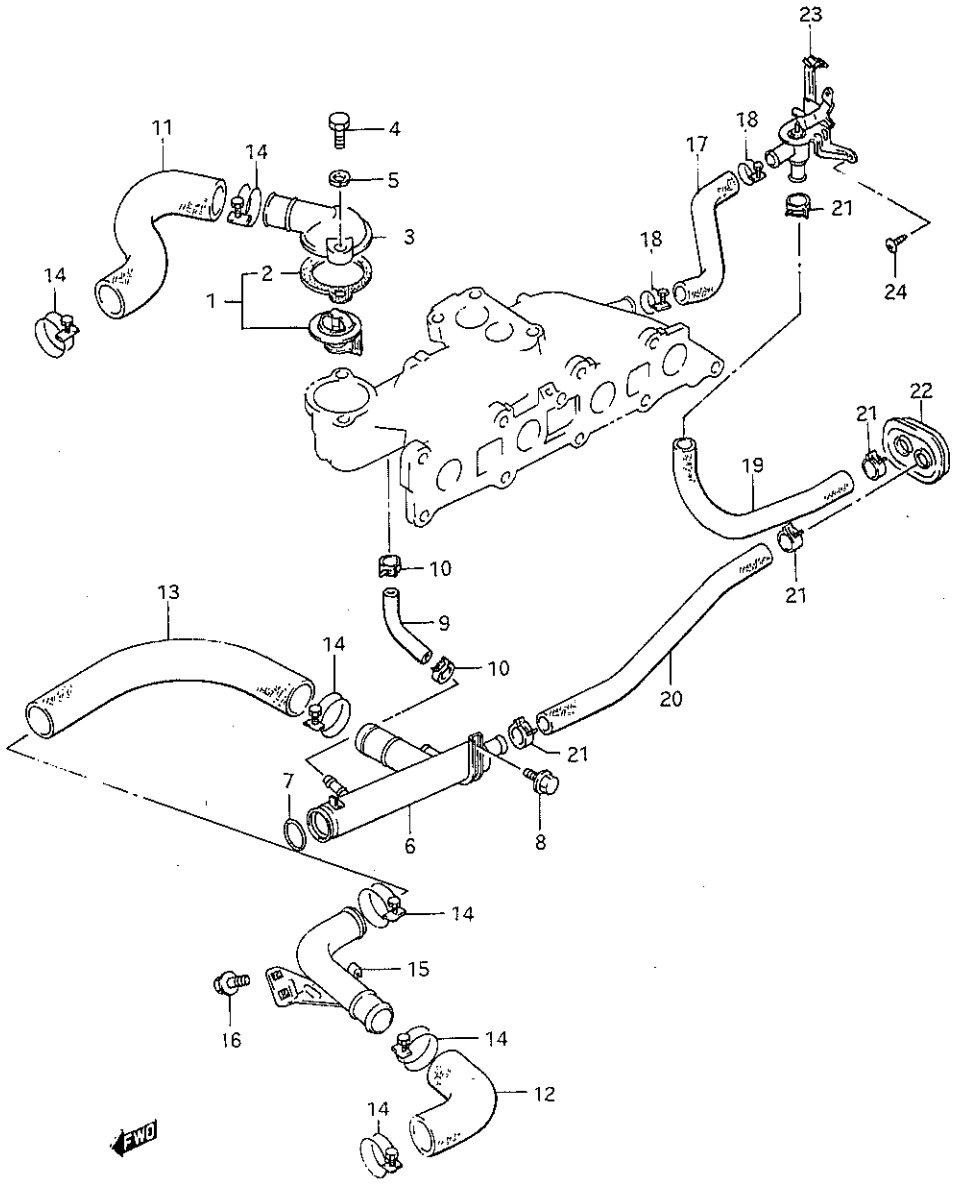

FIG.30 (1-D-14) WATER HOSE (RHD)

REF.NO.	PART NO.	DESCRIPTION	Q'TY Q/W	Q'TY V	REMARKS
1	17600-83821	THERMOSTAT, water (82°C)	1	1	
2	17569-80000	GASKET, cap	1	1	
3	17561-73000	CAP, thermostat	1	1	
4	01107-08303	BOLT	2	2	
5	08321-21083	LOCK WASHER	2	2	
6-1	17550-83001	PIPE, water inlet	1	1	W/heater
6-2	17550-83011	PIPE, water inlet	1	1	N/heater
6-3	17550-83021	PIPE, water inlet	1	1	W/heater E2,E6,E30,E35,E68
6-4	17550-83031	PIPE, water inlet	1	1	N/heater,E30,E35
7	09280-28006	O RING	1	1	
8	01517-06103	BOLT	1	1	
9	17859-83001	HOSE, water bypass	1	1	
10	09401-12404	CLIP	2	2	
11	17841-83000	HOSE, radiator inlet	1	1	
12	17851-83000	HOSE, radiator outlet No.1	1	1	
13	17852-83000	HOSE, radiator outlet No.2	1	1	
14	09400-36311	CLAMP	6	6	
15	17860-83000	PIPE, radiator outlet	1	1	
16	01517-06123	BOLT	2	2	
17	17871-83000	HOSE, inlet to valve	1	1	W/heater
11	09400-22312	CLAMP	2	2	W/heater
19	17872-83000	HOSE, valve to heater	1	1	W/heater
20	17873-83000	HOSE, heater to inlet	1	1	W/heater
21	09401-20402	CLIP	4	4	W/heater
22-1	74812-83001	GROMMET, heater hose	1	1	W/heater
22-2	74812-80000	GROMMET, heater hose	1	1	N/heater
23	74710-83000	VALVE, water	1	1	W/heater
24	03241-06126	SCREW	2	2	W/heater

FIG.31

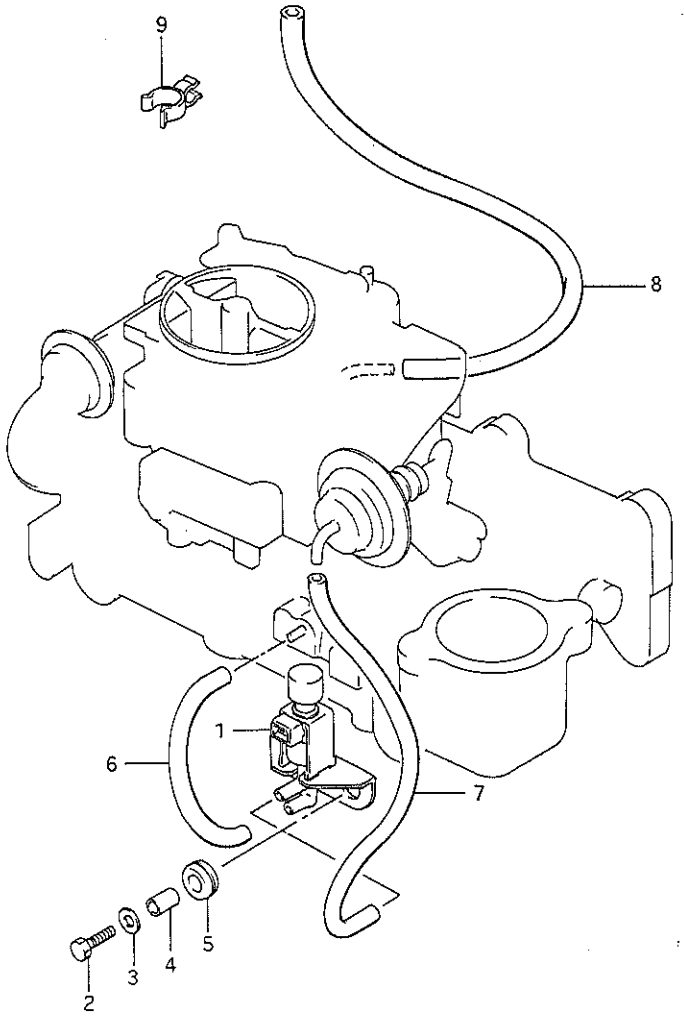

FIG.31 (1-E- 2) EMISSION CONTROL SYSTEM

REF.NO.	PART NO.	DESCRIPTION	Q'TY Q/W	Q'TY V	REMARKS
1	18550-82021	VALVE, 3way solenoid	1	1	
2	01107-06203	BOLT	2	2	
3	09160-06027	WASHER (6.5x20x1.2)	2	2	
4	09180-06106	SPACER (6.8x10x7)	2	2	
5	09308-10004	GROMMET	2	2	
6	09343-03090	HOSE, VSV to intake	1	1	L:95
7	09343-03044	HOSE, VSV to carburetor	1	1	L:150
8	09343-03114	HOSE, distributor to CARB	1	1	L:310
9	09408-00060	CLIP	1	1	

Note
FIG.32 (E-3) : E2,E6,E15,E16,E19,E30,E34,E35,E54,E68 and E22,E25,E39 (N/catalyzer)
FIG.33 (E-4) : E17,E18 and E39 (W/catalyzer)
FIG.34 (E-6) : E22,E25 (W/catalyzer)
FIG.35 (E-7) : E43

FIG. 32

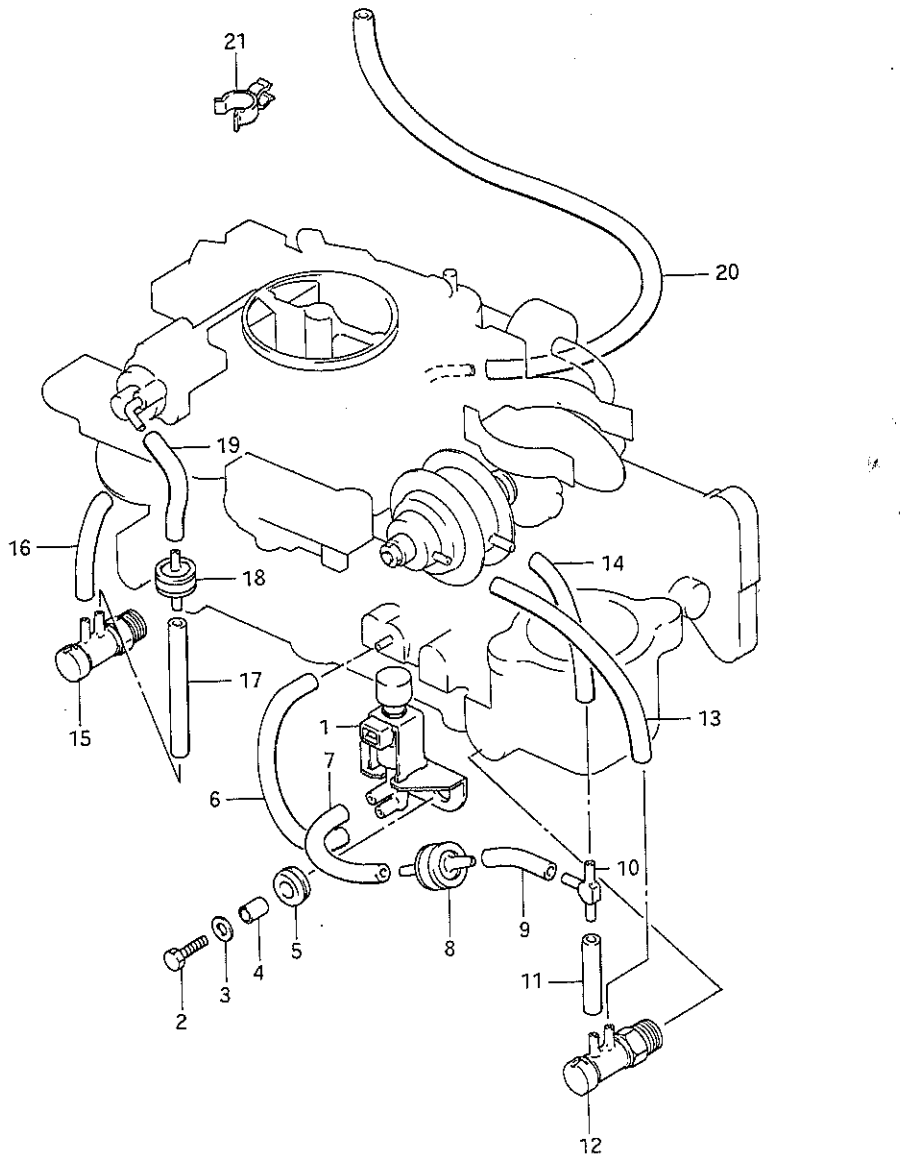

FIG.32 (1-E- 3) EMISSION CONTROL SYSTEM (SEE NOTE 1)

REF.NO.	PART NO.	DESCRIPTION	Q'TY Q/W	Q'TY V	REMARKS
1	18550-82021	VALVE, 3way solenoid	1	1	
2	01107-06203	BOLT	2	2	
3	09160-06027	WASHER (6.5x20xl.2)	2	2	
4	09180-06106	SPACER (6.8x10x7)	2	2	
5	09308-10004	GROMMET	2	2	
6	09343-03090	HOSE, VSV to intake	1	1	L:95
7	09343-03087	HOSE, VSV to JET	1	1	L:50
8	18115-83000	JET	1	1	
9	09343-03020	HOSE, 3way to JET	1	1	L:30
10	09367-04002	3way	1	1	
11	09343-03020	HOSE, BVSV to 3way	1	1	L:30
12	18123-83000	VALVE, BVS	1	1	
13	09343-03079	HOSE, BVSV to CARB	1	1	L:100
14	09343-03088	HOSE, CARB to 3way	1	1	L:65
15	18123-80400	VALVE, BVS	1	1	
16	09343-03088	HOSE, BVSV to intake	1	1	L:65
17	09343-03090	HOSE, BVSV to JET	1	1	L:95
18	18115-83010	JET	1	1	
19	09343-03087	HOSE, JET to CARB	1	1	L:50
20	09343-03114	HOSE, distributor to CARB	1	1	L:310
21	09408-00060	CLIP	1	1	

Note 1 : E2,E6,E15,E16,E19,E30,E34,E35,E54,E68 and E22,E25,E39 (N/catalyzer)

Note 2
FIG.33 (E-4) : E17,E18 and E39 (W/catalyzer)
FIG.34 (E-6) : E22,E25 (W/catalyzer)

SJ413-4 E1

FIG.33

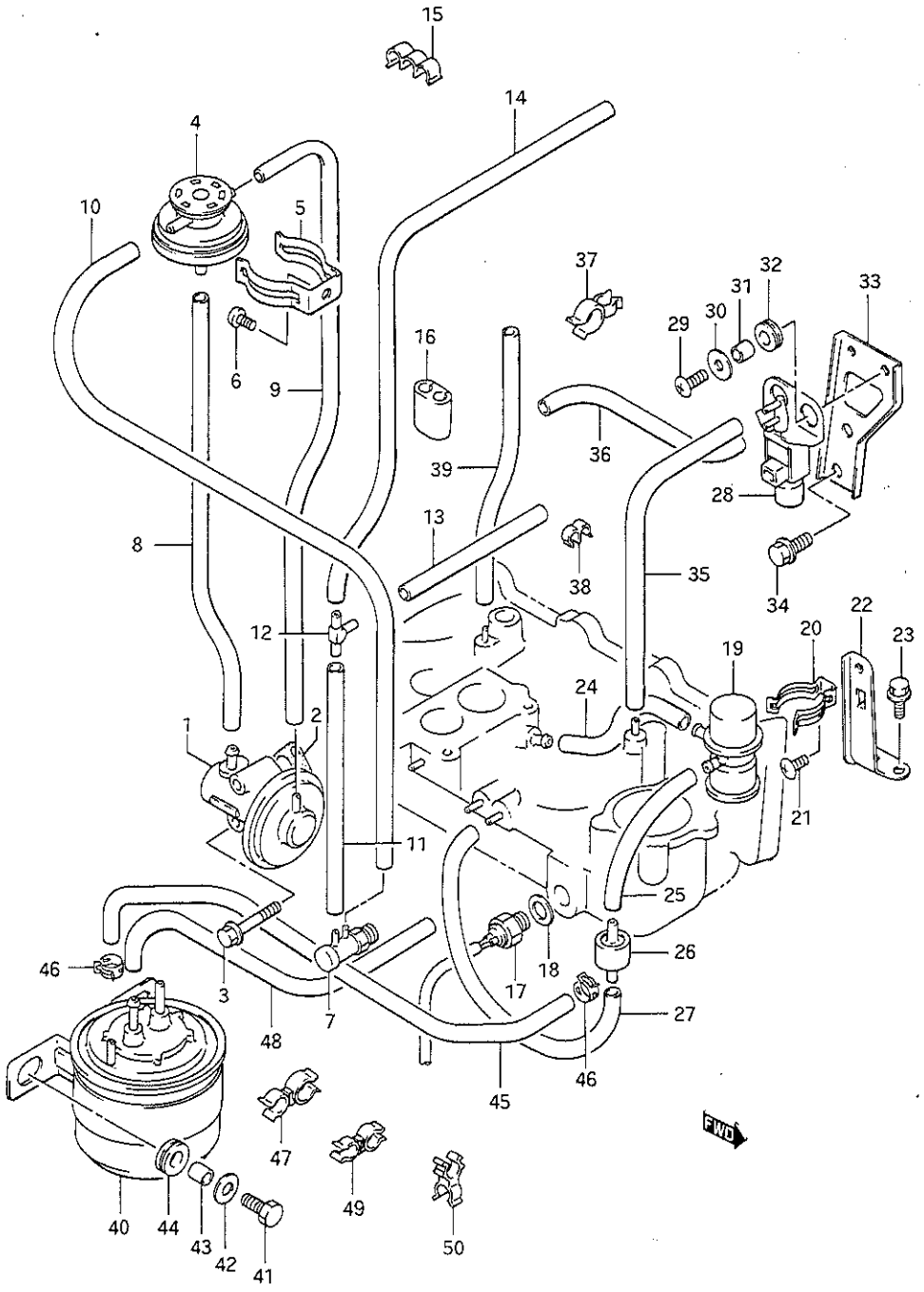

SJ413-4 E1

FIG.33 (1-E- 4) EMISSION CONTROL SYSTEM (E17,E18 AND E39:W/CATALYZER)

REF.NO.	PART NO.	DESCRIPTION	Q'TY Q/W	Q'TY V	REMARKS
1	18111-82000	VALVE, EGR	1	1	
2	18529-78101	GASKET, EGR valve	1	1	
3	01537-06453	BOLT	2	2	
4	18112-83010	MODULATOR ASSY, EGR	1	1	
5	18589-78101	CLAMP, modulator	1	1	
6	02142-06103	SCREW	1	1	
7	18550-73031	VALVE, BVS	1	1	
8	18471-83020	HOSE, EGR to modulator	1	1	
9	09358-35754-260	HOSE, EGR to modulator	1	1	L:260
10	09343-03035	HOSE, modulator to BVSV	1	1	L:370
11	09343-03091	HOSE, BVSV to 3 way	1	1	L:115
12	09367-04002	JOINT, 3 way	1	1	
13	09343-03087	HOSE, 3 way to carburetor	1	1	L:50
14	09343-03103	HOSE, distributor to 3 way	1	1	L:340
15	09408-00034	CLIP	2	2	
16	09329-07002	CUSHION, vacuum hose	1	1	
17	18212-83000	SWITCH, thermol	1	1	
18	09168-12007	GASKET, thermal switch	1	1	
19	18119-80400	VALVE, mixture control	1	1	
20	18438-83000	CLAMP, MCV	1	1	
21	02142-06103	SCREW	1	1	
22	18419-83000	BRACKET, MCV	1	1	
23	01517-06123	BOLT	2	2	
24	18475-83020	HOSE, MCV to intake	1	1	
25	09343-03020	HOSE, MCV to jet	1	1	L:30
26	18115-83000	JET	1	1	
27	09343-03091	HOSE, jet to intake	1	1	L:115
28	18550-82021	VALVE, 3 way solenoid	1	1	
29	02112-06143	SCREW	2	2	
30	09160-06086	WASHER (6.5x20x1)	2	2	
31	09180-06106	SPACER (6.8x10x7)	2	2	
32	09308-10004	GROMMET	2	2	
33	18417-83000	BRACKET, VSV	1	1	
34	01534-10163	BOLT	2	2	

SJ413-4 E1

FIG. 33

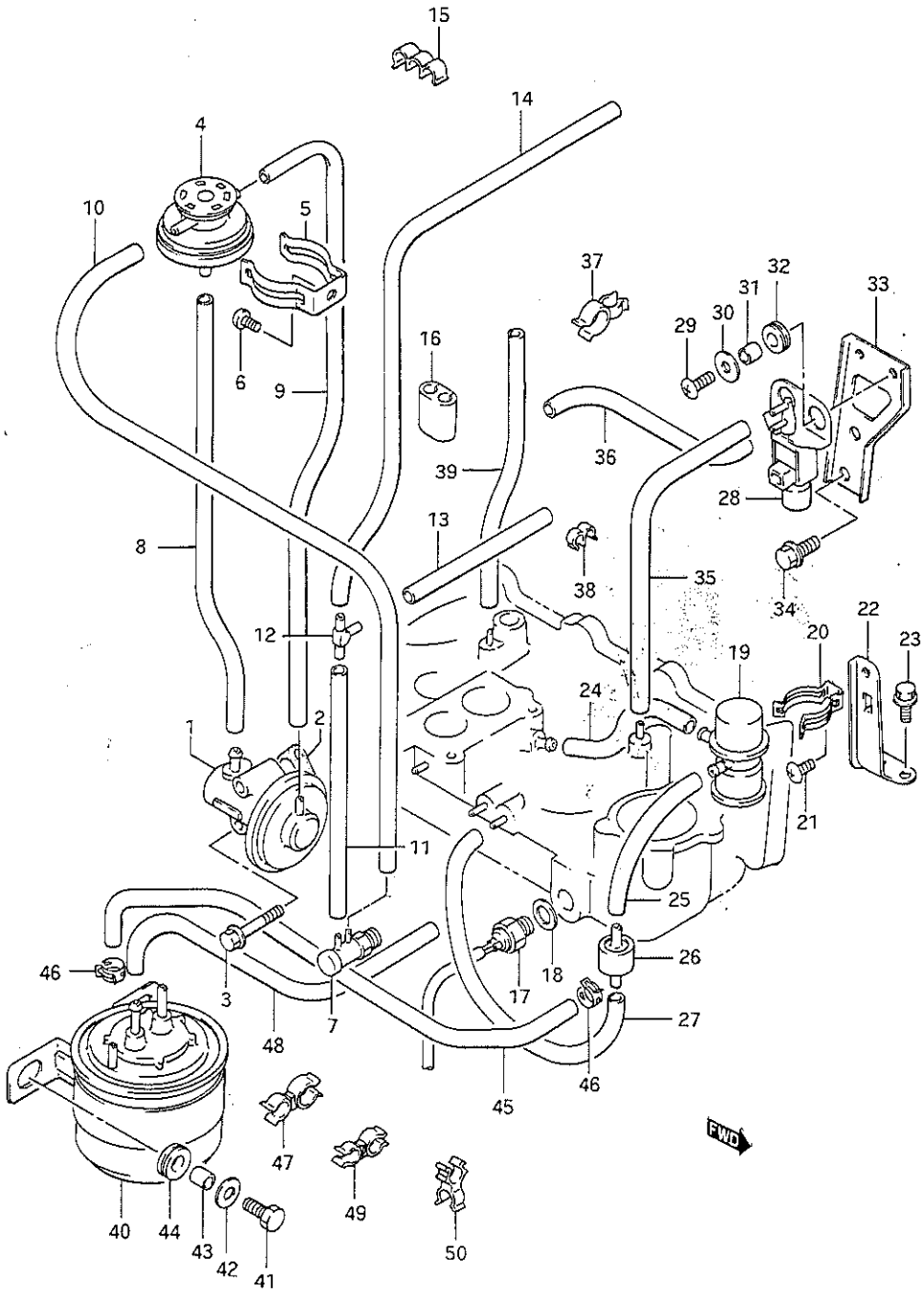

SJ413-4 E1

FIG.33 (1-E- 5) EMISSION CONTROL SYSTEM (E17,E18 AND E39:W/CATALYZER)

REF.NO.	PART NO.	DESCRIPTION	Q'TY Q/W	Q'TY V	REMARKS
35	09343-03097	HOSE, VSV to intake	1	1	L:180
36	09343-03035	HOSE, carburetor to VSV	1	1	L:370
37	09408-00060	CLAMP	1	1	
38	09408-00035	CLIP	2	2	
39	09343-03093	HOSE, HIC to intake	1	1	L:130
40	18560-83000	CANISTER	1	1	
41	01107-08163	BOLT	2	2	
42	09160-08075	WASHER (8.2x26x1.6)	2	2	
43	09180-08092	SPACER (8.8x12x6)	2	2	
44	09320-12011	CUSHION	2	2	
45	18474-83000	HOSE, carburetor purge	1	1	
46	09401-11407	CLAMP	2	2	
47	09408-00081	CLAMP	1	1	
48	09354-35755-15A	HOSE, canister purge air	1	1	L:1150->370
49	09408-00056	CLAMP	1	1	
50	09408-00067	CLAMP	1	1	

SJ413-4 E1

FIG.34

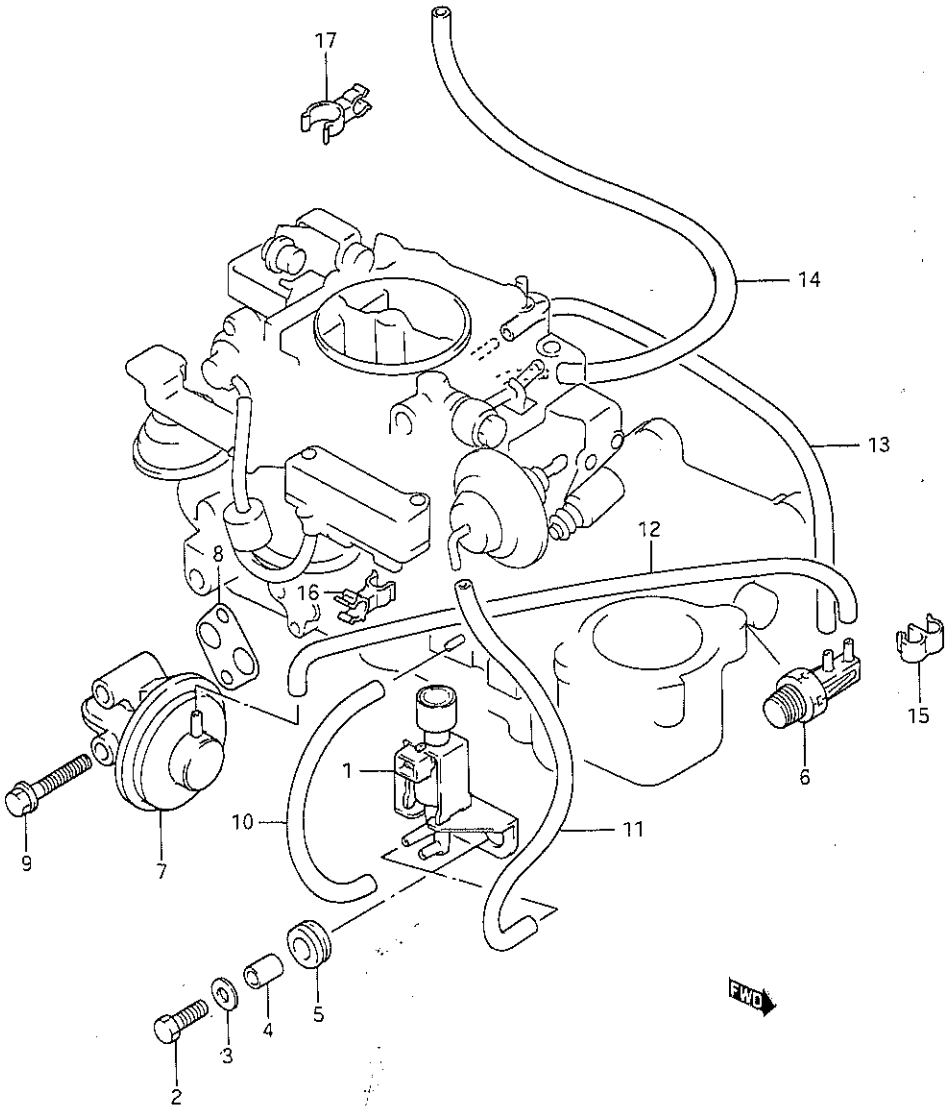

FIG.34 (1-E- 6) EMISSION CONTROL SYSTEM (E22,E25:W/CATALYZER)

REF.NO.	PART NO.	DESCRIPTION	Q'TY Q	V	REMARKS
1	18550-82021	VALVE, 3way solenoid	1	1	
2	01107-06203	BOLT	2	2	
3	09160-06027	WASHER (6.5x20x1.2)	2	2	
4	09180-06106	SPACER (6.8x10x7)	2	2	
5	09308-10004	GROMMET	2	2	
6	18550-73031	VALVE, BVS	1	1	
7	18111-82320	VALVE, EGR	1	1	
8	18529-78101	GASKET	1	1	
9	01537-06453	BOLT	2	2	
10	09343-03088	HOSE, VSV to intake	1	1	L:66
11	09343-03044	HOSE, VSV to CARB	1	1	L:150
12	09343-03035	HOSE, EGR to BVSV	1	1	L:370
13	09343-03032	HOSE, BVSV to CARB	1	1	L:280
14	09343-03114	HOSE, distributor to CARB	1	1	L:310
15	09408-00033	CLIP	1	1	
16	09408-00067	CLIP	1	1	
17	09408-00060	CLIP	1	1	

SJ413-4 E1

FIG.35

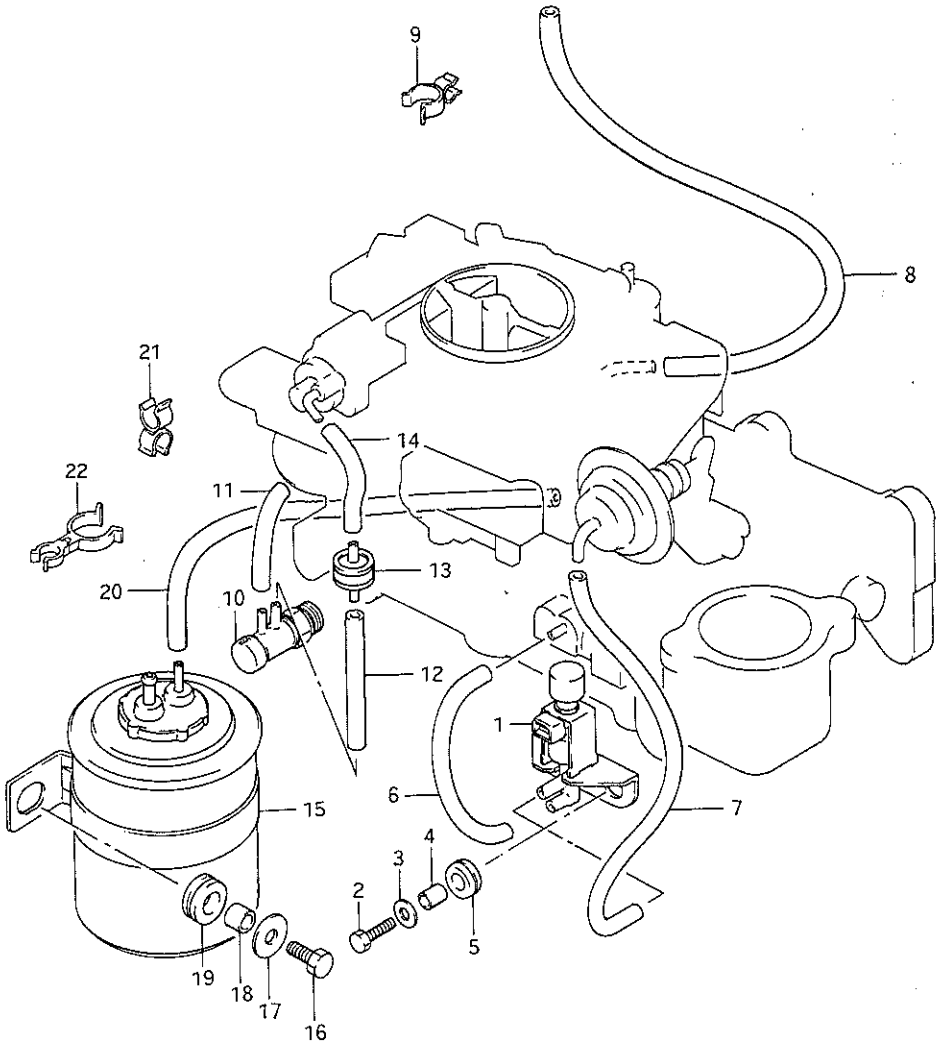

SJ413-4 E1

FIG.35 (1-E- 7) EMISSION CONTROL SYSTEM (E43)

REF.NO.	PART NO.	DESCRIPTION	Q'TY Q/W	Q'TY V	REMARKS
1	18550-82021	VALVE, 3way solenoid	1	1	
2	01107-06203	BOLT	2	2	
3	09160-06027	WASHER (6.5x20x1.2)	2	2	
4	09180-06106	SPACER (6.8x10x7)	2	2	
5	09308-10004	GROMMET	2	2	
6	09343-03090	HOSE, VSV to intake	1	1	L:95
7	09343-03044	HOSE, VSV to carburetor	1	1	L:150
8	09343-03114	HOSE, distributor to CARB	1	1	L:310
9	09408-00060	CLIP	1	1	
10	18123-80400	VALVE, BVS	1	1	
11	09343-03088	HOSE, BVSV to intake	1	1	L:65
12	09343-03090	HOSE, BVSV to JET	1	1	L:95
13	18115-83010	JET	1	1	
14	09343-03087	HOSE, JET to CARB	1	1	L:50
15	18560-80010	CANISTER	1	1	
16	01107-08163	BOLT	2	2	
17	09160-08075	WASHER (8.2x26x1.6)	2	2	
18	09180-08092	SPACER (8.8x12x6)	2	2	
19	09320-12011	GROMMET	2	2	
20	09354-35753-250	HOSE, canister purge air	1	1	L:250
21	09408-00067	CLAMP	1	1	
22	09408-00069	CLAMP	1	1	

SJ413-4 E1

FIG. 36

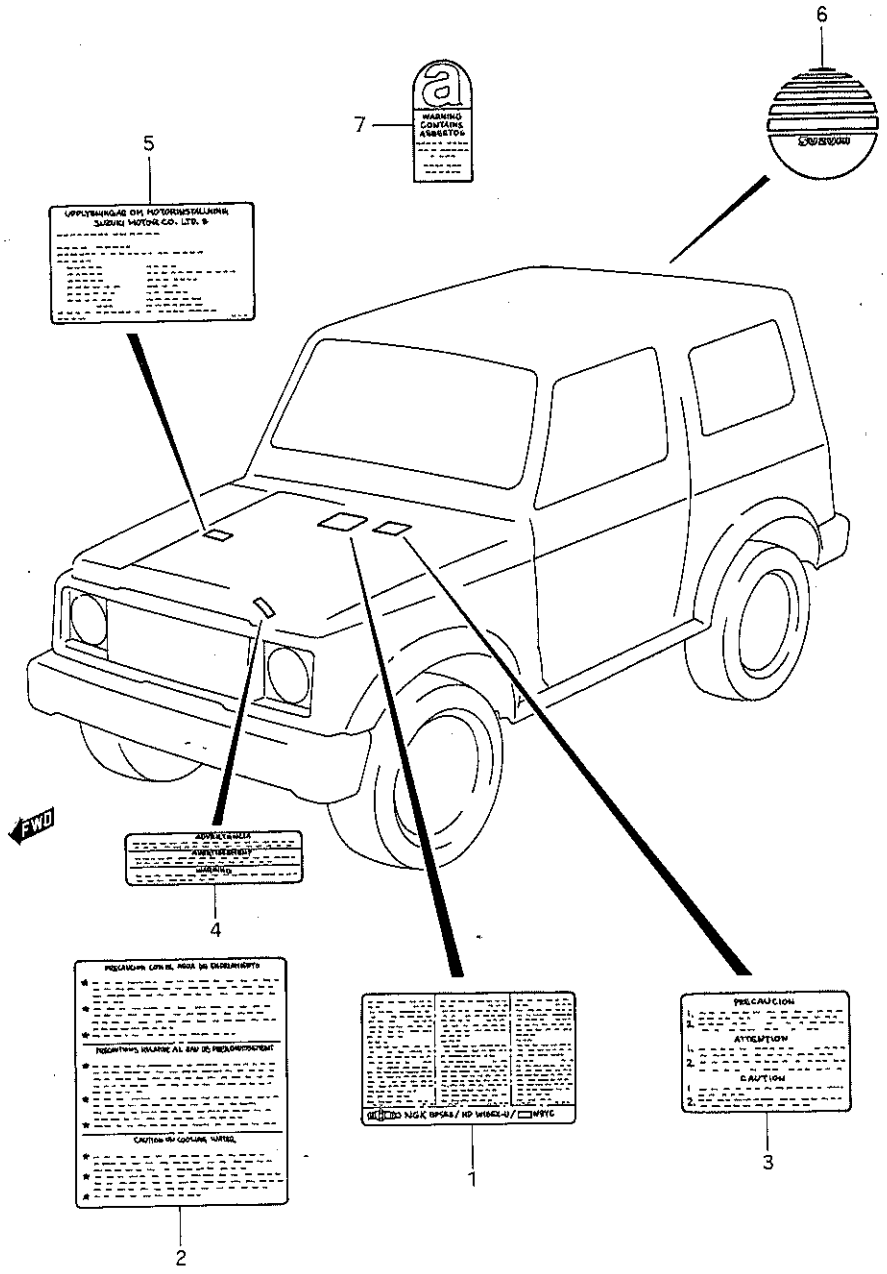

FIG.36 (1-E- 8) LABEL

REF.NO.	PART NO.	DESCRIPTION	Q'TY Q/W	Q'TY V	REMARKS
1-1	11962-83020	LABEL, information	1	1	
1-2	11962-83010	LABEL, information	1	1	E2,E6,E15,E16,E17,E18, E19,E22,E25,E30,E54,E55 E59,E54,E68
2	17999-73000	LABEL, cooling mater caution	1	1	
3	17999-80010	LABEL, cooling mater caution	1	1	
4	11958-83000	LABEL, cooling fan caution	1	1	
5-1	11955-83110	LABEL, emission control	1	1	E17
5-2	11955-83090	LABEL, emission control	1	1	E18
5-3	11955-82070	LABEL, emission control	-	1	E30
5-4	11955-83050	LABEL, emission control	1	1	E55
6-1	12597-83001	LABEL, exhaust gas control	1	-	E17,E18 E22,E25,E59:W/catalyzer
6-2	12597-82001	LABEL, exhaust gas control	-	1	E17,E18 E22,E25,E59:W/catalyzer
7	11967-82000	LABEL, asbestos warning	1	1	

FIG. 37

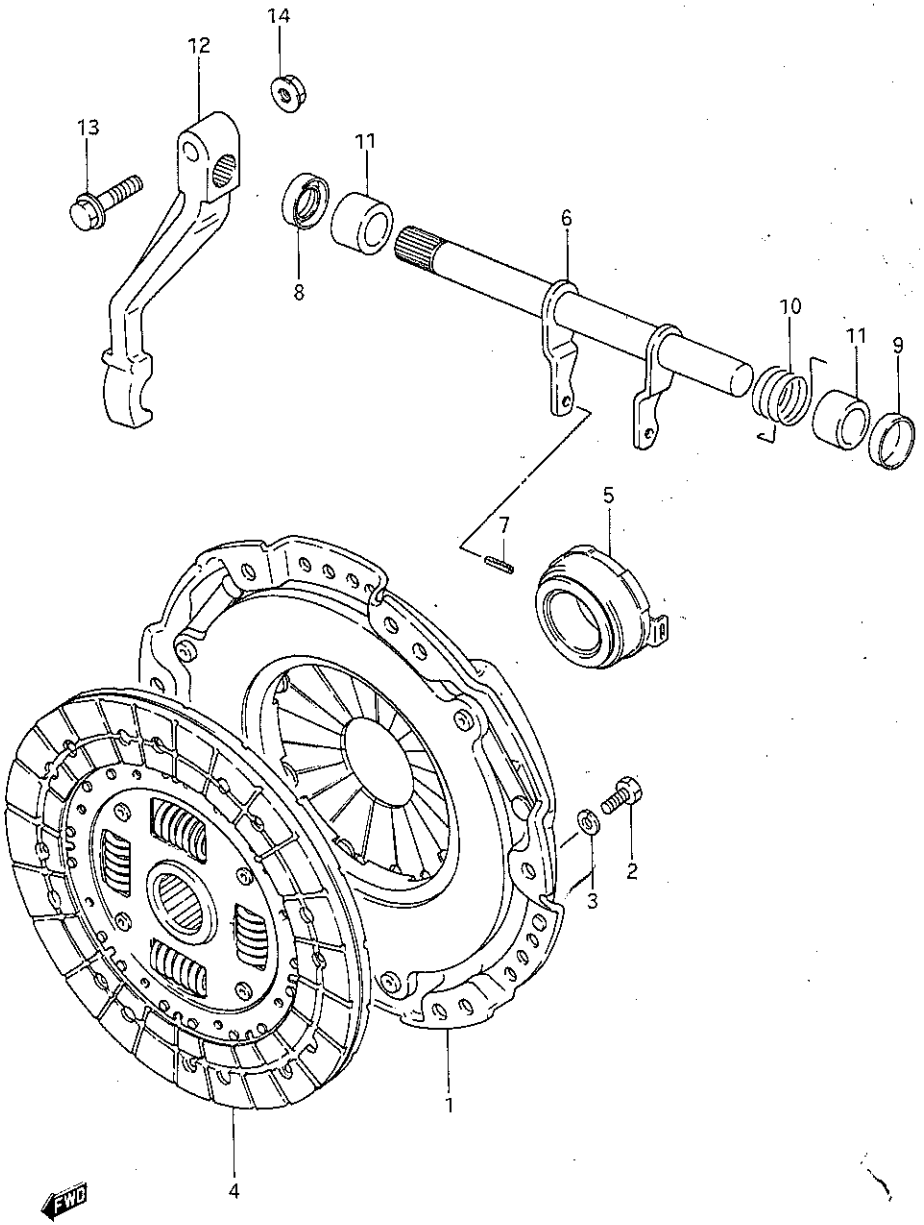

FIG.37 (1-F- 2) CLUTCH

REF.NO.	PART NO.	DESCRIPTION	Q'TY Q/W	Q'TY V	REMARKS
1	22100-83020	COVER ASSY, clutch 22100-83050			
2	01107-08163	BOLT	6	6	
3	08321-21083	LOCK WASHER	6	6	
4	22400-83021	DISC, clutch 22400 8/A00			10K01
5	09269-33001	BEARING, clutch release	1	1	23265-70C00
6	23260-83012	SHAFT, clutch release	1	1	
7	09205-03019	PIN	1	1	
8	09284-14003	OIL SEAL	1	1	
9	09241-22003	PLUG	1	1	
10	09448-20006	SPRING	1	1	
11	09300-14012	BUSH	2	2	
12	23266-83001	ARM, clutch release	1	1	
13	01517-08353	BOLT	1	1	
14	08316-16083	NUT	1	1	

FIG.38

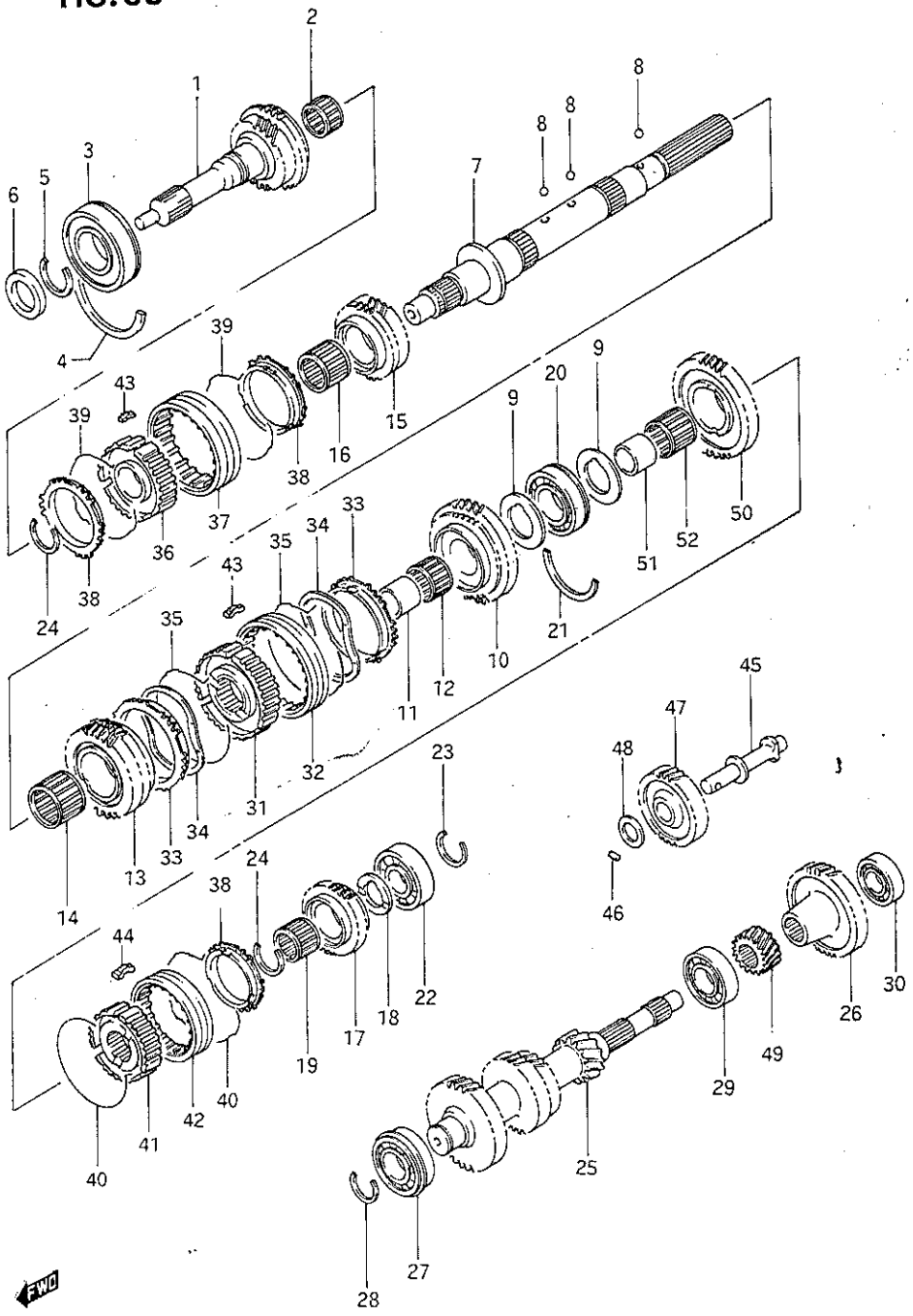

SJ413-4 E1

FIG.38 (1-F- 3) TRANSMISSION

REF.NO.	PART NO.	DESCRIPTION	Q'TY Q/W	Q'TY V	REMARKS
1	24110-83001	SHAFT, input (NT:23)	1	1	
2	09263-20056	BEARING	1	1	
3	09262-28005	BEARING	1	1	
4	09390-68002	C RING	1	1	
5	09380-28007	CIRCLIP	1	1	
6	09283-25077	OIL SEAL	1	1	
7	24121-83001	SHAFT, main	1	1	
8	06111-06003	BALL	3	3	
9	09166-30007	WASHER	2	2	
10	24210-83010	GEAR, mainshaft low (NT:36)	1	1	
11	09300-30003	BUSH	1	1	
12	09263-35015	BEARING	1	1	
13	24220-83010	GEAR, mainshaft 2nd (NT:32)	1	1	
14	09263-35015	BEARING	1	1	
15	24230-83000	GEAR, mainshaft 3rd (NT:29)	1	1	
16	09263-30031	BEARING	1	1	
17	24250-83000	GEAR, mainshaft 5th (NT:23)	1	1	
18	09166-25009	WASHER	1	1	
19	09263-28021	BEARING	1	1	
20	09262-30072	BEARING	1	1	
21	09390-62010	C RING	1	1	
22	09262-25073	BEARING	1	1	
23	09380-25011	CIRCLIP	1	1	
24	09380-28007	CIRCLIP	2	2	
25	24131-83002	SHAFT, counter	1	1	NT:35/31/25/15
26	24351-83000	GEAR, counter shaft 5th	1	1	NT:44
27	09262-28015	BEARING, front	1	1	
28	09380-28007	CIRCLIP	1	1	
29	09262-28006	BEARING, center	1	1	
30	09262-20075	BEARING, rear	1	1	

SJ413-4 F1

FIG.38

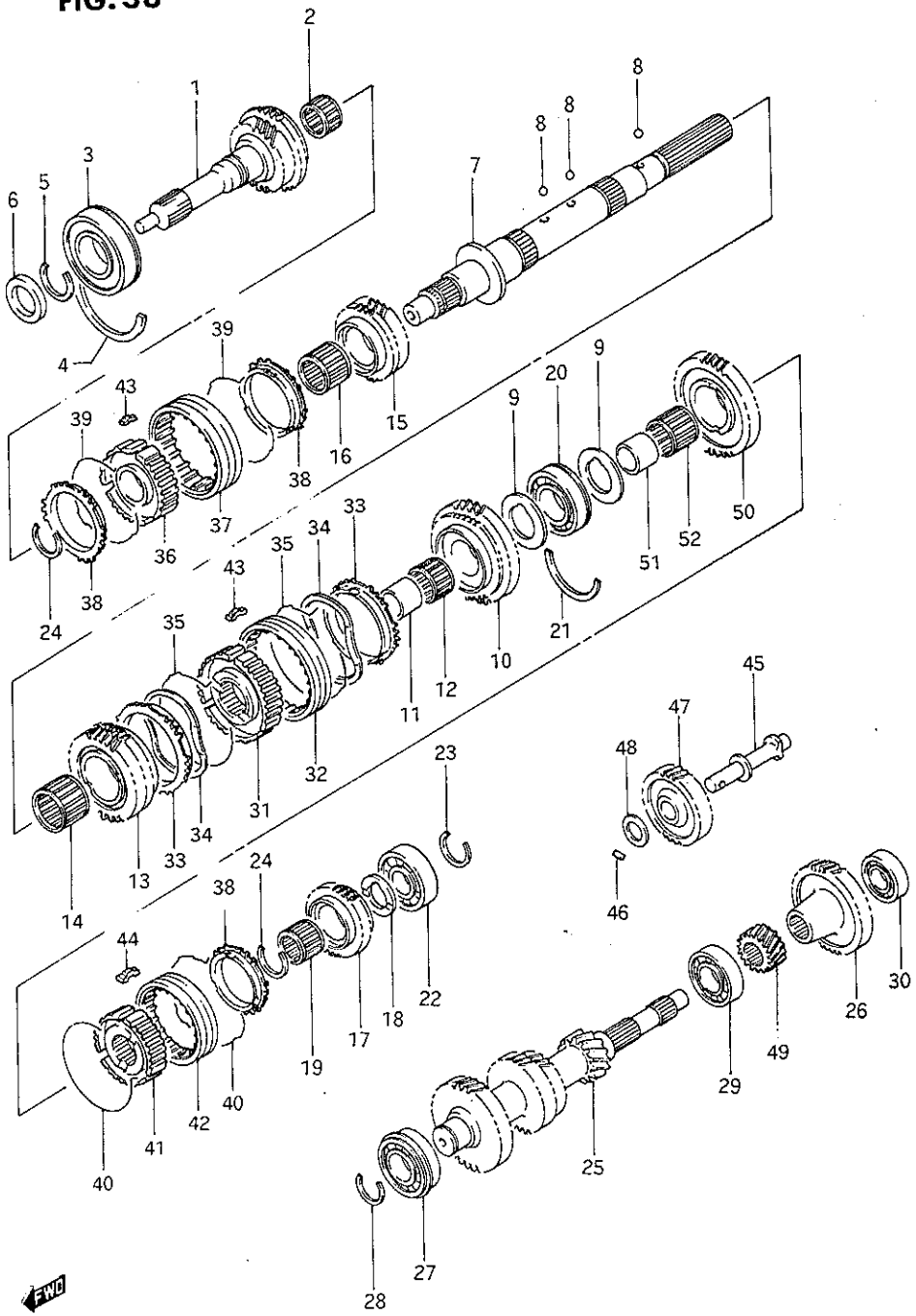

SJ413-4 E1

FIG.38 (1-F~ 4) TRANSMISSION

REF.NO.	PART NO.	DESCRIPTION	Q'TY Q/W	Q'TY V	REMARKS
31	24411-83000	HUB, synchronizer low	1	1	
32	24421-83004	SLEEVE, synchronizer low	1	1	
33	24431-83001	RING, synchronizer low	2	2	
34	24436-83000	SPRING, synchronizer low	2	2	
35	09388-00017	SPRING, low	2	2	
36	24412-83000	HUB, synchronizer high	1	1	
37	24422-83003	SLEEVE, synchronizer high	1	1	
38	24432-83001	RING, synchronizer high	3	3	
39	09388-00019	SPRING, high	2	2	
40	09388-00019	SPRING, 5th speed	2	2	
41	24413-83001	HUB, reverse drive	1	1	
42	24423-83003	SLEEVE, reverse drive	1	1	
43	09422-05011	KEY	6	6	
44	09422-05012	KEY	3	3	
45	24551-83000	SHAFT, reverse idle gear	1	1	
46	09261-06003	PIN	1	1	
47	24560-83001	GEAR, reverse idle (NT:33)	1	1	
48	09166-16014	WASHER	1	1	
49	24671-83000	GEAR, countershaft reverse	1	1	NT:18
50	24681-83000	GEAR, mainshaft reverse	1	1	NT:41
51	09300-30003	BUSH	1	1	
52	09263-35015	BEARING	1	1	

SJ413-4 E1

FIG.39

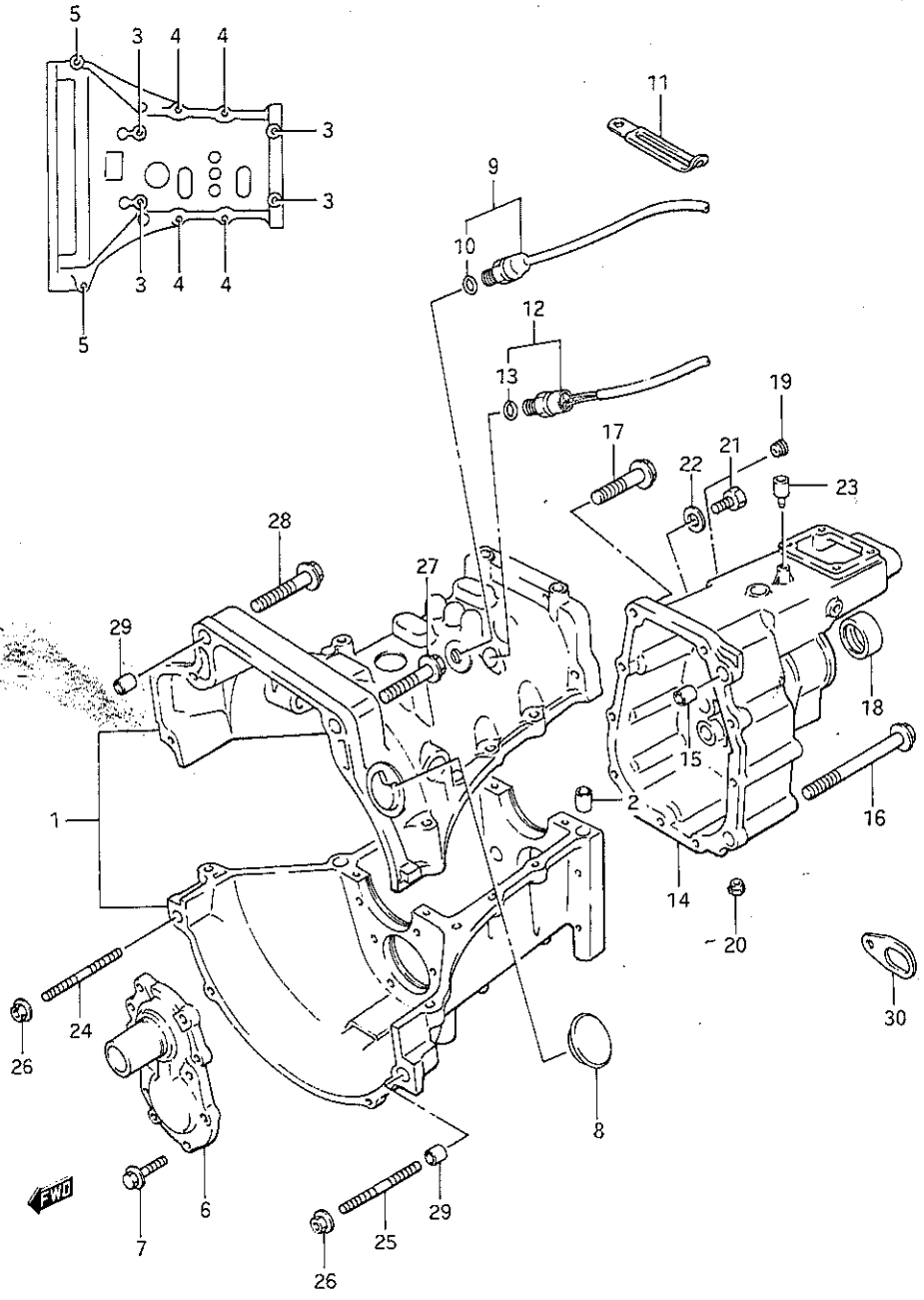

FIG.39 (1-F- 5) TRANSMISSION CASE

REF.NO.	PART NO.	DESCRIPTION	Q'TY Q/W	Q'TY V	REMARKS
1-1	24700-83000	CASE ASSY, transmission	1	1	
1-2	24700-83050	CASE ASSY, transmission	1	1	E22,E25:W/catalyzer
2	09206-13011	.KNOCK PIN	2	2	
3	09103-08131	.BOLT, No.1	4	4	
4	01537-08303	.BOLT, No.2	4	4	
5	01537-08653	.BOLT, No.3	2	2	
6	24741-83001	RETAINER, input shaft bearing	1	1	
7	09103-08130	BOLT	8	8	
8	09250-26005	CAP, inspection timing	1	1	
9	37610-83000	SWITCH, back up	1	1	
10	09280-11002	.O RING	1	1	
11	09404-08402	CLAMP	1	1	
12	37710-83000	SWITCH, neutral	1	1	E22,E25:W/catalyzer
13	09280-11002	.O RING	1	1	E22,E25:W/catalyzer
14	24770-83004	CASE, extension	1	1	
15	09206-13011	KNOCK PIN	2	2	
16	09103-08132	BOLT, No.1 (8x100)	3	3	
17	01517-08353	BOLT, No.2	7	7	
18	24780-83010	OIL SEAL, extension case	1	1	
19	09246-16009	PLUG, oil filler	1	1	
20	09246-16010	PLUG, oil drain	1	1	
21	01107-08123	PLUG, oil drain	1	1	
22	09168-08015	GASKET	1	1	
23	24821-09001	PLUG, breather	1	1	
24	01421-10353	STUD BOLT, No.1	1	1	
25	01421-10453	STUD BOLT, No.2	1	1	
26	08316-16103	NUT	2	2	
27	01537-10603	BOLT, No.1	1	1	
28	01537-10703	BOLT, No.2	1	1	
29	09206-13001	KNOCK PIN	2	2	
30	11851-85000	HOOK, engine	1	1	

SJ413-4 E1

FIG. 40

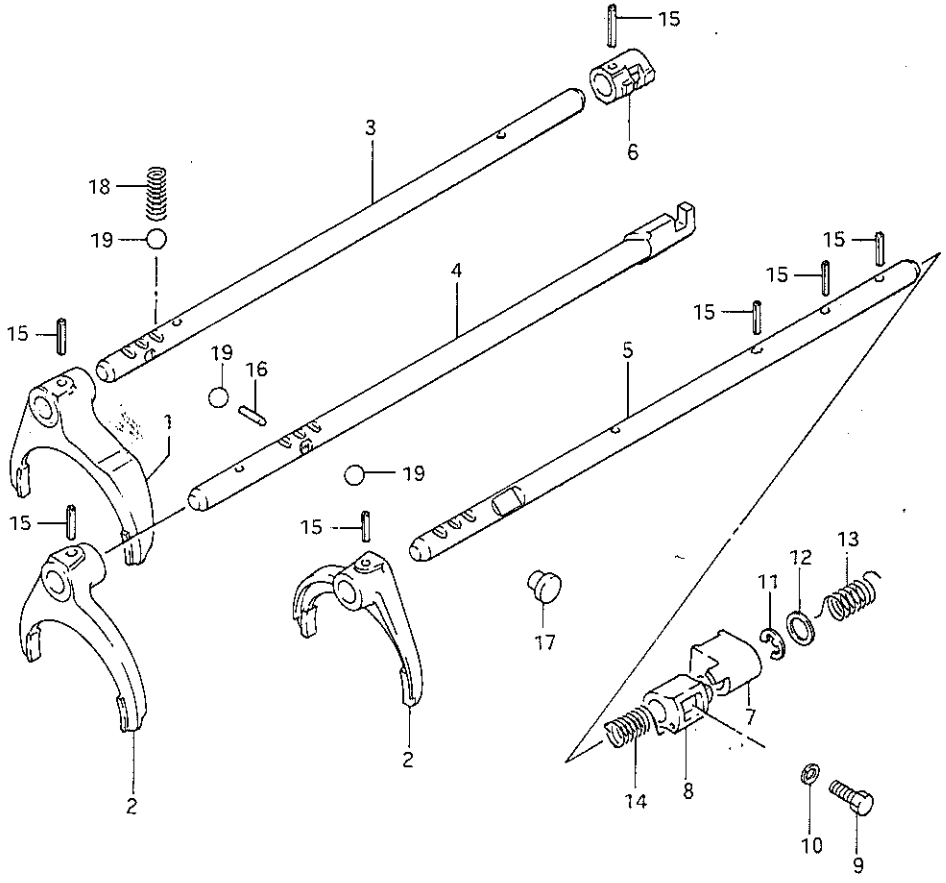

FIG.40 (1-F- 6) GEAR SHIFTING FORK

REF.NO.	PART NO.	DESCRIPTION	Q'TY Q/W	Q'TY V	REMARKS
1	25211-83002	FORK, low speed	1	1	
2	25221-83001	FORK, high/reverse speed	2	2	
3	25411-83001	SHAFT, low speed fork	1	1	
4	25420-83001	SHAFT, high speed fork	1	1	
5-1	25451-83001	SHAFT, reverse fork	1	1	
5-2	25451-83501	SHAFT, reverse fork	1	1	F.22,F.25:W/catalyzer
6	25241-83000	YOKE, low speed shaft	1	1	
7	25261-83002	YOKE, 5th gear	1	1	
8	25271-83002	YOKE, reverse shaft	1	1	
9	09135-08006	BOLT	1	1	
10	08321-21083	LOCK WASHER	1	1	
11	08352-11106	E RING	1	1	
12	08212-14201	WASHER	1	1	
13	09448-18016	SPRING	1	1	
14	09448-18017	SPRING	1	1	
15	09205-05012	PIN	7	7	
16-1	09261-03015	ROLLER, shaft locating	1	1	
16-2	09261-03015	ROLLER, shaft locating	2	2	F.22,F.25:W/catalyzer
17	09250-10006	PLUG	1	1	
18	09440-09019	SPRING	3	3	
19-1	06111-12004	BALL	5	5	
19-2	06111-12004	BALL	6	6	F.22,F.25:W/catalyzer

SJ413-4 E1

FIG.41

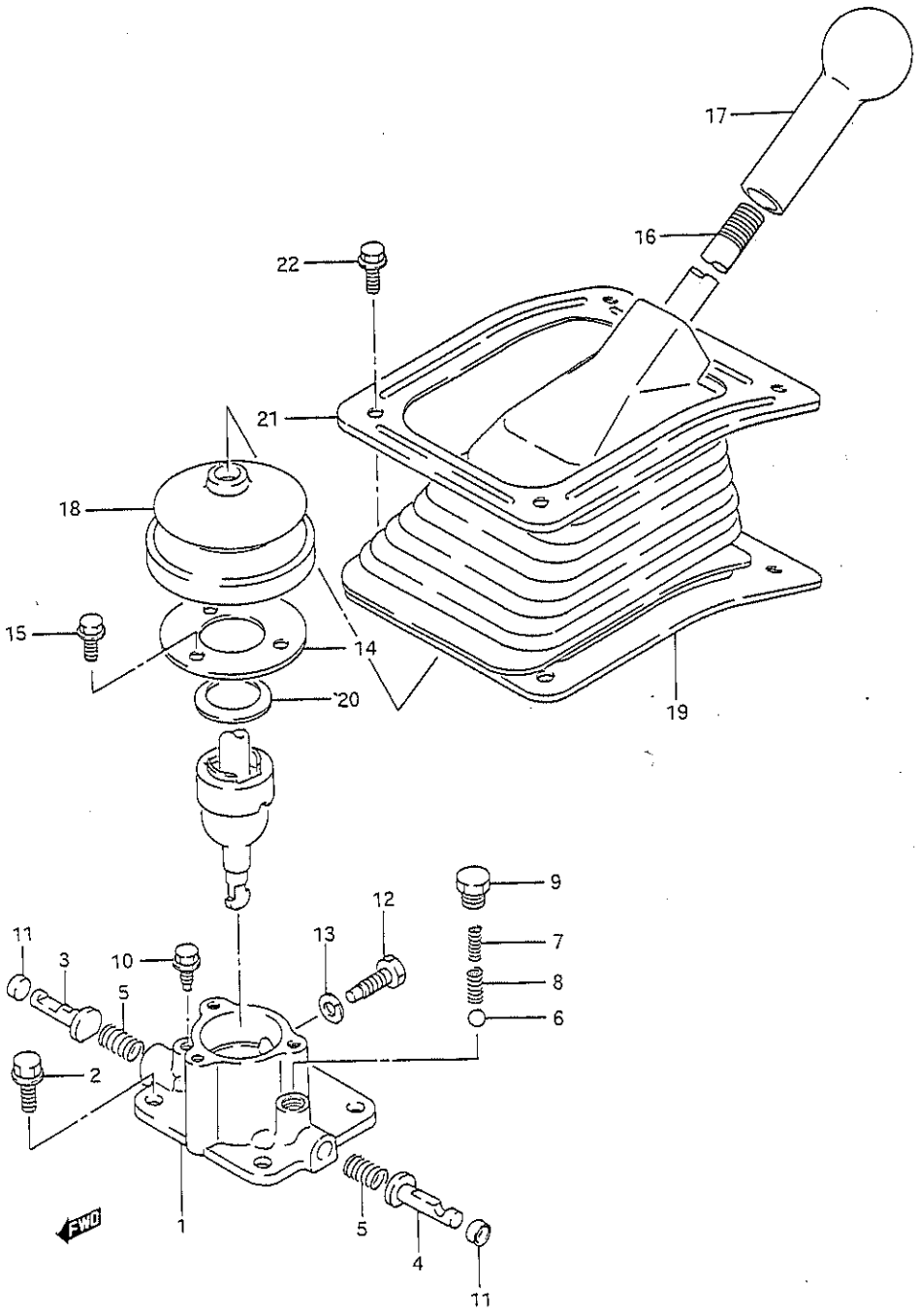

SJ413-4 E1

FIG.41 (1-F- 7) GEAR SHIFTING CONTROL

REF.NO.	PART NO.	DESCRIPTION	Q'TY Q/W	Q'TY V	REMARKS
1	25121-83001	CASE, shifting lever	1	1	
2	01517-08203	BOLT	4	4	
3	25341-69002	PIN, low speed select guide	1	1	
4	25342-69002	PIN, reverse select guide	1	1	
5	09440-11005	SPRING, select return	2	2	
6	06112-10004	BALL	1	1	
7	09440-04019	SPRING, inner	1	1	
8	09440-07005	SPRING, outer	1	1	
9	09128-10002	SCREW, reverse guide pin	1	1	
10	09128-06032	SCREW, low speed guide pin	1	1	
11	09241-08003	PLUG	2	2	
12	09135-08006	BOLT, lever locating	1	1	
13	08321-21083	LOCK WASHER	1	1	
14	25125-80001	COVER, lever case	1	1	
15	01517-06163	BOLT	3	3	
16	28101-83010	LEVER, gear shifting control	1	1	
17	28113-83010	KNOB, lever	1	1	
18	28135-80000	BOOT, lever No.1	1	1	
19	28136-83000	BOOT, lever No.2	1	1	
20	09164-24003	WASHER	1	1	
21	28137-83000	COVER, boot	1	1	
22	01517-06123	BOLT	4	4	

SJ413-4 E1

FIG.42

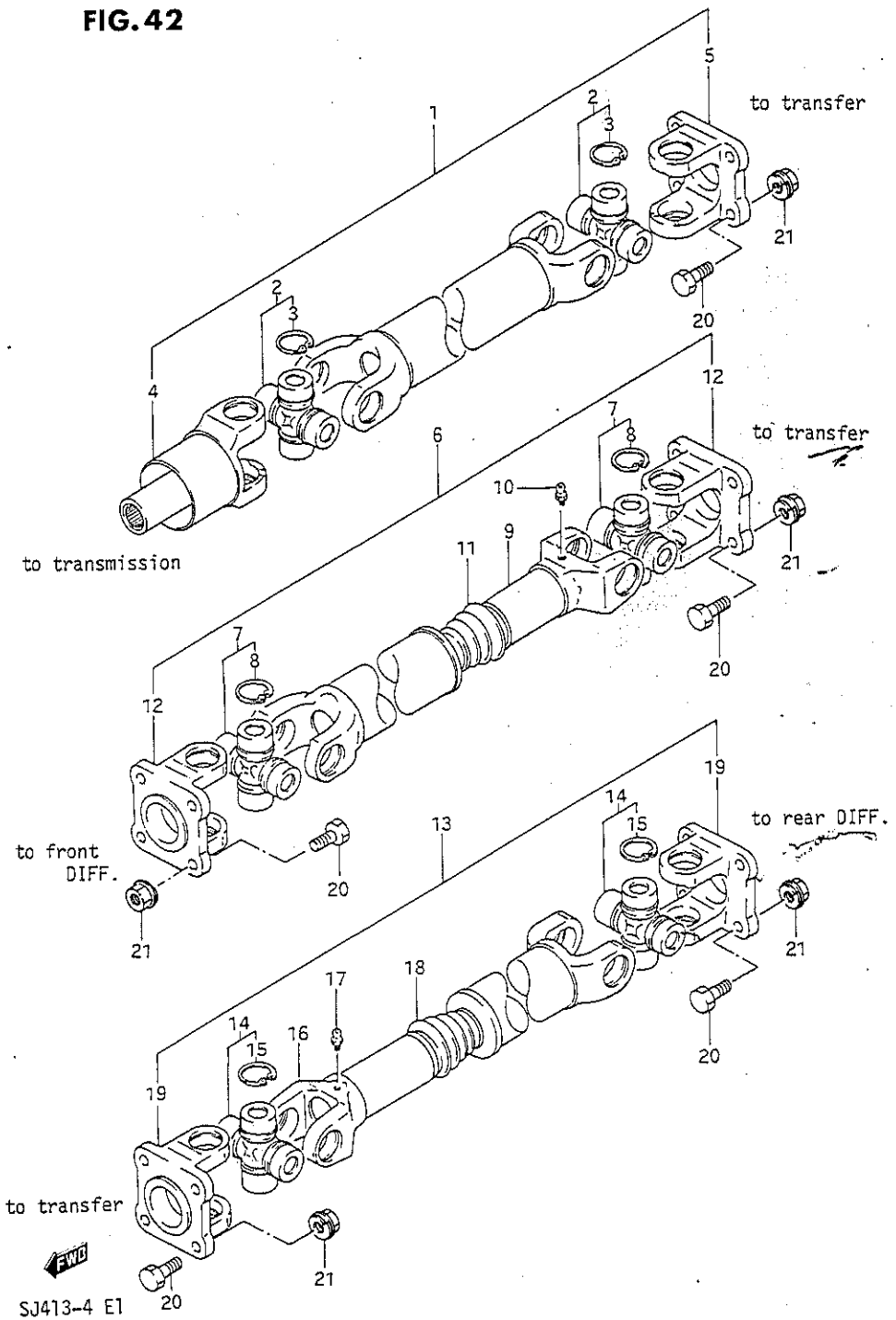

FIG.42 (1-F- 8) PROPELLER SHAFT

REF.NO.	PART NO.	DESCRIPTION	Q'TY Q/W	Q'TY V	REMARKS
1	27101-83001	SHAFT ASSY, propeller No.1	1	1	
2	27200-83810	.JOINT ASSY, universal	2	2	
3	08331-41256	..CIRCLIP	8	8	
4	27140-83001	.YOKE, sliding	1	1	
5	27131-83001	.YOKE, joint flange	1	1	
6	27102-83001	SHAFT ASSY, propeller No.2	1	1	front drive
7	27200-83810	.JOINT ASSY, universal	2	2	
8	08331-41256	..CIRCLIP	8	8	
9	27180-83001	.YOKE, sliding	1	1	
10	08351-21008	.GREASE NIPPLE	1	1	
11	27153-83000	.BOOT	1	1	
12	27131-83001	.YOKE, joint flange	2	2	
13-1	27103-83001	SHAFT ASSY, propeller No.3	1	1	Q,V,rear drive
13-2	27103-83201	SHAFT ASSY, propeller No.3	1	-	W,rear drive
14	27200-83810	.JOINT ASSY, universal	2	2	
15	08331-41256	..CIRCLIP	8	8	
16	27180-83001	.YOKE, sliding	1	1	
17	08351-21008	.GREASE NIPPLE	1	1	
18	27153-83000	.BOOT	1	1	
19	27131-83001	.YOKE, joint flange -	2	2	
20	09100-08270	BOLT (8x27)	20	20	
21	09159-08068	NUT	20	20	

27200-83810

FIG.43

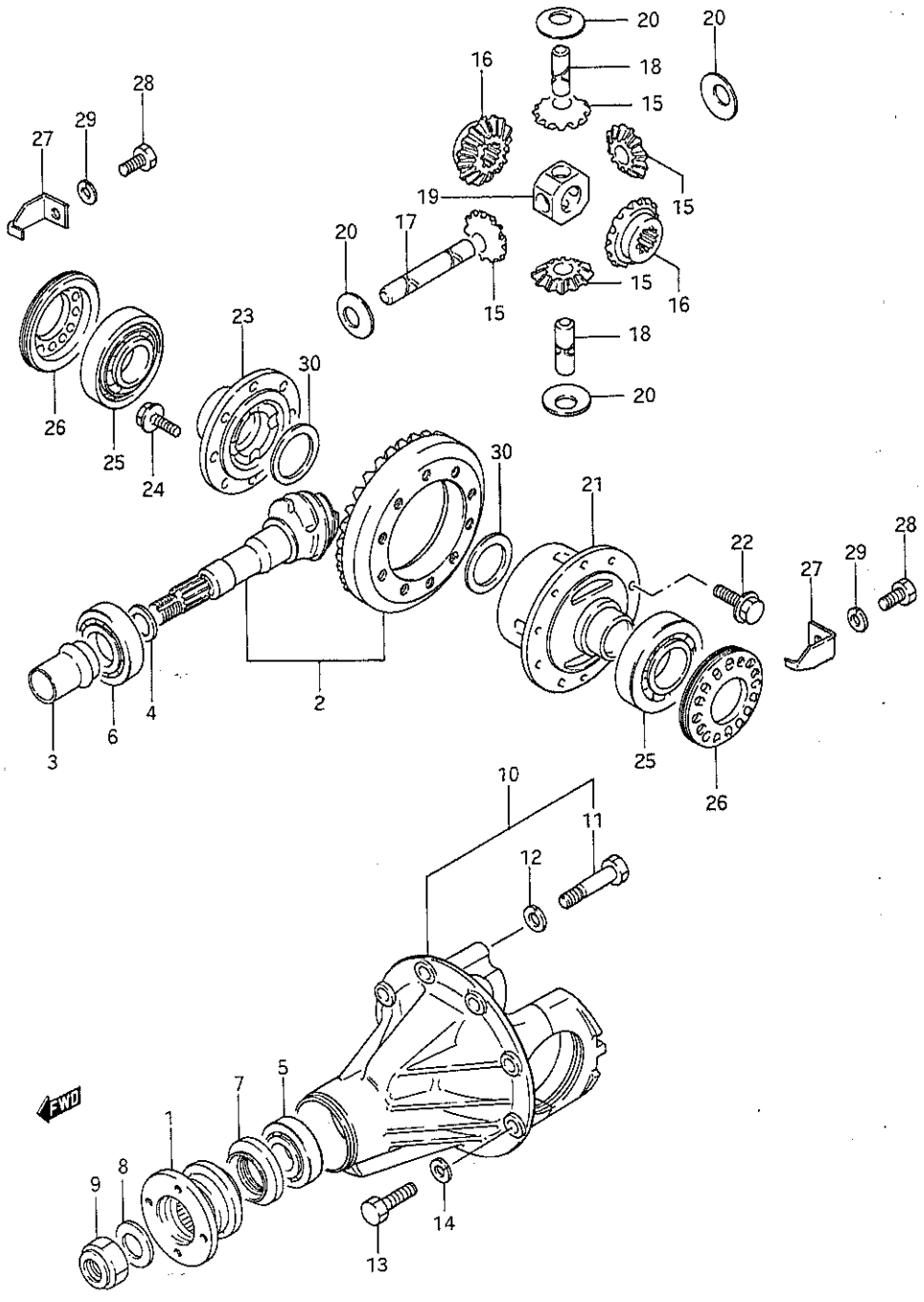

FIG.43 (1-F- 9) DIFFERENTIAL GEAR

REF.NO.	PART NO.	DESCRIPTION	Q'TY Q/W	Q'TY V	REMARKS
1	27110-83001	FLANGE, universal joint	2	2	
2	27300-83821	PINION & GEAR SET, bevel	2	2	
3	27315-83001	SPACER, bevel pinion	2	2	
4-1	09181-35023	SHIM (T:0.30)	AR	0~2	
4-2	09181-35012	SHIM (T:1.00)	AR	0~2	
4-3	09181-35013	SHIM (T:1.03)	AR	0~2	
4-4	09181-35014	SHIM (T:1.06)	AR	0~2	
4-5	09181-35015	SHIM (T:1.09)	AR	0~2	
4-6	09181-35016	SHIM (T:1.12)	AR	0~2	
4-7	09181-35017	SHIM (T:1.15)	AR	0~2	
4-8	09181-35018	SHIM (T:1.18)	AR	0~2	
4-9	09181-35019	SHIM (T:1.21)	AR	0~2	
4-10	09181-35020	SHIM (T:1.24)	AR	0~2	
4-11	09181-35021	SHIM (T:1.27)	AR	0~2	
4-12	09181-35022	SHIM (T:1.30)	AR	0~2	
5	09265-30002	BEARING, front	2	2	
6	09265-35002	BEARING, rear	2	2	
7	09283-40013	OIL SEAL	2	2	
8	09160-20056	WASHER	2	2	
9	09159-20003	NUT	2	2	
10	27450-83000	CARRIER ASSY, differential	2	2	
11	09111-12009	.BOLT	8	8	
12	08321-31126	.LOCK WASHER	8	8	
13	01107-08253	BOLT	16	16	
14	08321-31083	LOCK WASHER	16	16	
15	27331-83000	PINION, differential	8	8	
16-1	27341-83100	GEAR, differential front	2	2	
16-2	27341-83000	GEAR, differential rear	2	2	
17	27351-83000	SHAFT, pinion No.1	2	2	
18	27355-83000	SHAFT, pinion No.2	4	4	
19	27356-63000	JOINT, pinion	2	2	
20	09164-15006	WASHER	8	8	

FIG.43

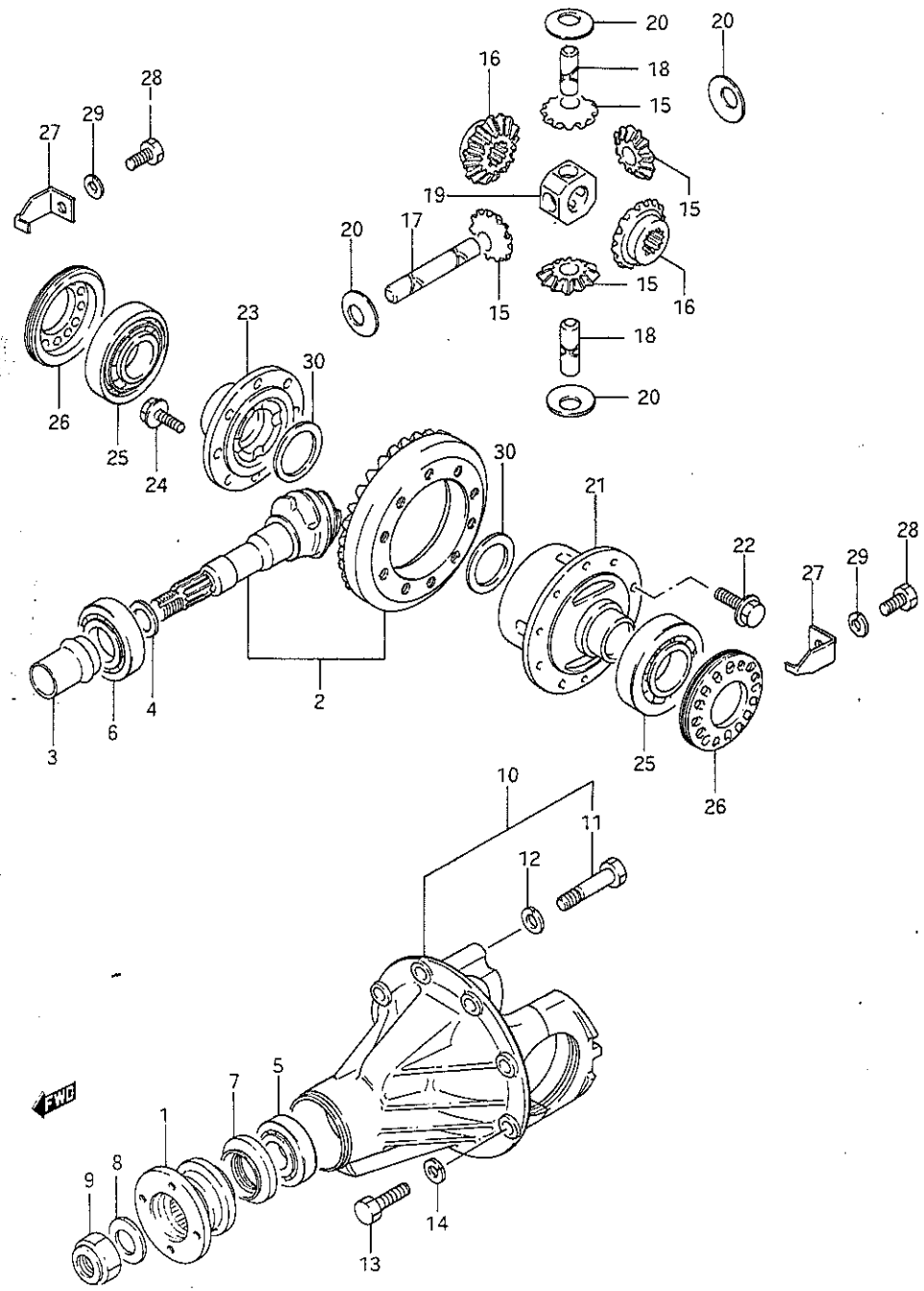

SJ413-4 E1

FIG.43 (1-F-10) DIFFERENTIAL GEAR

REF.NO.	PART NO.	DESCRIPTION	Q'TY Q/W	Q'TY V	REMARKS
21	27411-83000	CASE, differential	2	2	
22	09103-10028	BOLT (10x20)	20	20	
23	27421-83000	CASE, differential	2	2	
24	09103-08030	BOLT (8x18.5)	16	16	
25	09265-45002	BEARING	4	4	
26	27461-83000	ADJUSTER, bearing	4	4	
27	27462-63202	PLATE, bearing lock	4	4	
28	01107-08126	BOLT	4	4	
29	08321-21086	LOCK WASHER	4	4	
30-1	09160-35006	THRUST WASHER, No.1 (T:0.9)	AR	0~2	
30-2	09160-35002	THRUST WASHER, No.2 (T:1.0)	AR	0~2	
30-3	09160-35003	THRUST WASHER, No.3 (T:1.1)	AR	0~2	
30-4	09160-35004	THRUST WASHER, No.4 (T:1.2)	AR	0~2	

SJ413-4 E1

FIG.44

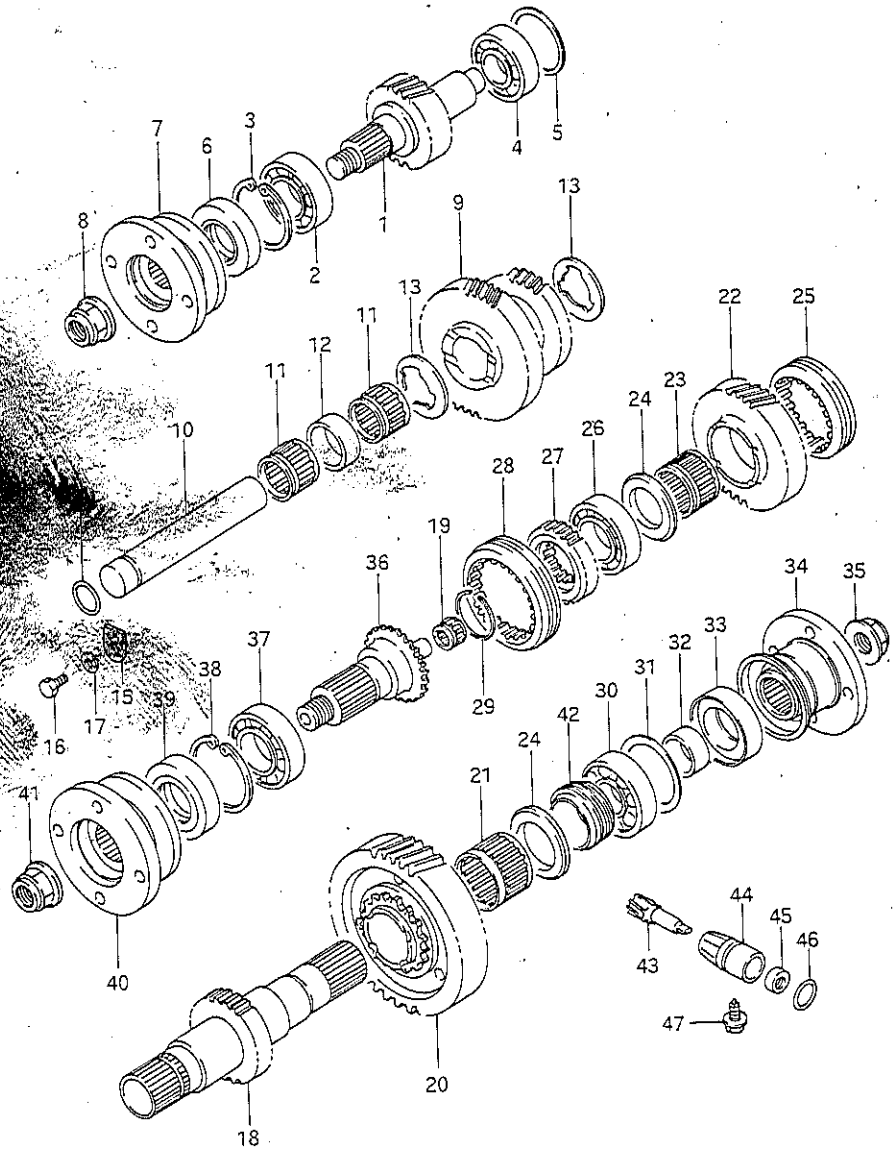

SJ413-4 E1

FIG.44 (1-F-11) TRANSFER GEAR

REF.NO.	PART NO.	DESCRIPTION	Q'TY Q/W	Q'TY V	REMARKS
1-1	29111-83050	SHAFT, input	1	1	
1-2	29111-83060	SHAFT, input	1	1	E14,E15
2	29981-80050	BEARING, front	1	1	
3	29992-80050	CIRCLIP	1	1	
4	29982-80050	BEARING, rear	1	1	
5-1	29117-80050	SHIM, input shaft (T:0.1)	AR	0~2	
5-2	29118-80050	SHIM, input shaft (T:0.3)	AR	0~2	
5-3	29119-80050	SHIM, input shaft (T:0.5)	AR	0~1	
6	29971-80051	OIL SEAL	1	1	
7	27110-83051	FLANGE, universal joint	1	1	
8	29951-83050	NUT	1	1	
9	29121-83050	GEAR, counter	1	1	
10	29131-80050	SHAFT, counter	1	1	
11	29983-80050	BEARING	2	2	
12	29962-80050	SPACER	1	1	
13	29956-80050	WASHER	2	2	
14	29975-80050	O RING	1	1	
15	29136-80050	PLATE, counter shaft	1	1	
16	01107-08163	BOLT	1	1	
17	08321-31083	LOCK WASHER	1	1	
18	29141-80050	SHAFT, output rear	1	1	
19	29986-80050	BEARING, pilot	1	1	
20	29211-83050	GEAR, output low	1	1	
21	29984-80050	BEARING	1	1	
22	29221-83050	GEAR, output high	1	1	
23	29985-80050	BEARING	1	1	
24	29959-80050	WASHER, output gear	2	2	
25	29241-80050	SLEEVE, reduction clutch	1	1	
26	08173-63060	BEARING, front	1	1	

SJ413-4 E1

FIG.44

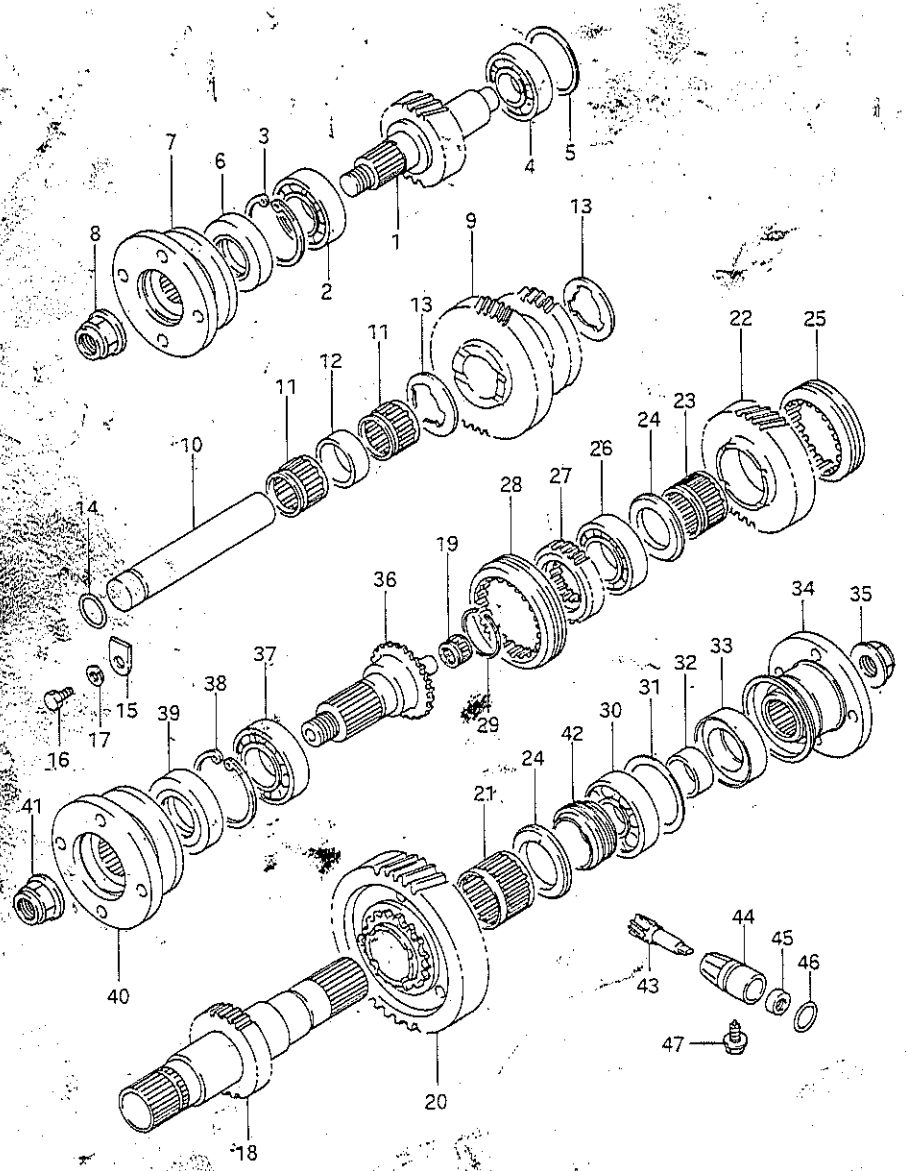

FIG.44 (1-F-12) TRANSFER GEAR

REF.NO.	PART NO.	DESCRIPTION	Q'TY Q/W	Q'TY V	REMARKS
27	29231-80050	HUB, front drive clutch	1	1	
28	29241-80050	SLEEVE, front drive clutch	1	1	
29	29911-80050	CIRCLIP	1	1	
30	29981-80050	BEARING, rear	1	1	
31-1	29147-80050	SHIM, output shaft (T:0.1)	AR	0~2	
31-2	29148-80050	SHIM, output shaft (T:0.3)	AR	0~2	
31-3	29149-80050	SHIM, output shaft (T:0.5)	AR	0~1	
32	29143-80050	RETAINER, output shaft	1	1	
33	29972-80050	OIL SEAL	1	1	
34	27110-83251	FLANGE, universal joint	1	1	
35	29951-83050	NUT	1	1	
36	29151-80050	SHAFT, output front	1	1	
37	29981-80050	BEARING	1	1	
38	29992-80050	CIRCLIP	1	1	
39	29971-80051	OIL SEAL	1	1	
40	27110-83051	FLANGE, universal joint	1	1	
41	29951-83050	NUT	1	1	
42	29411-83050	GEAR, speedometer drive	1	1	NT:7
43	29421-80450	GEAR, speedometer driven	1	1	NT:20
44	29431-80050	CASE, speedometer gear	1	1	
45	29973-80050	OIL SEAL	1	1	
46	09280-19001	O RING	1	1	
47	09128-06032	BOLT	1	1	

SJ413-4 E1

FIG.45

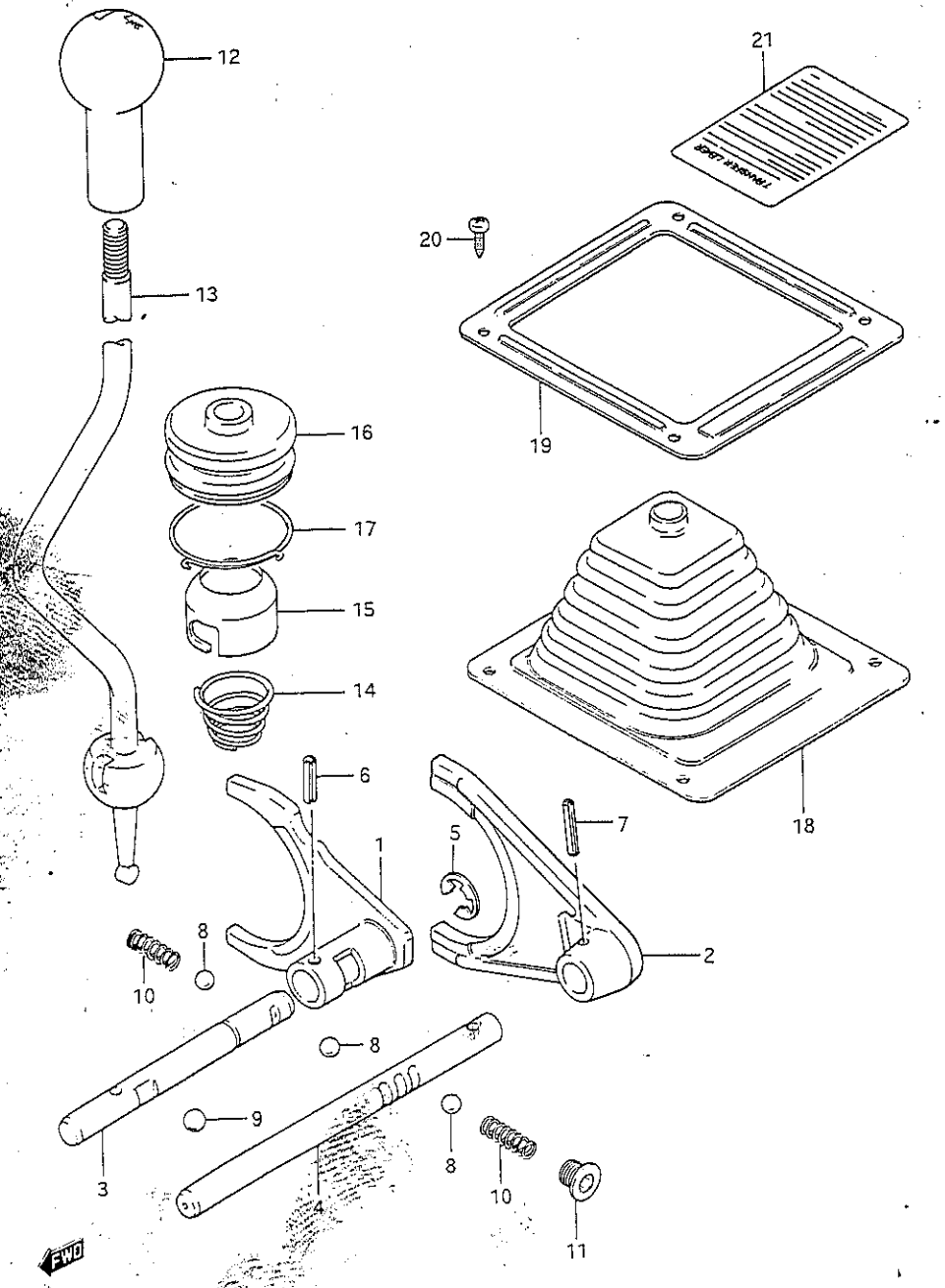

SJ413-4 E1

FIG.45 (1-F-13) TRANSFER GEAR SHIFTING

REF.NO.	PART NO.	DESCRIPTION	Q'TY Q/W	Q'TY V	REMARKS
1	29310-80050	FORK, front drive shifting	1	1	
2	29321-80052	FORK, reduction shifting	1	1	
3	29331-80051	SHAFT, front drive shifting	1	1	
4	29332-80052	SHAFT, reduction shifting	1	1	
5	08332-11106	E RING	1	1	
6	09205-04003	SPRING PIN, front drive fork	1	1	
7	09205-04001	SPRING PIN, reduction fork	1	1	
8	06112-10004	BALL	3	3	
9	06111-12004	BALL	1	1	
10	29995-80050	SPRING	2	2	
11	29941-80050	SCREW	1	1	
12	29344-83010	KNOB, control lever	1	1	
13	29341-80700	LEVER, control	1	1	
14	29996-80050	SPRING	1	1	
15	29348-80050	SHEET, lever spring	1	1	
16	29345-80051	BOOT, lever No.1	1	1	
17	09401-50402	CLAMP	1	1	
18	29346-80002	BOOT, lever No.2	1	1	
19	29347-80001	COVER, boot	1	1	
20	03141-06163	SCREW	4	4	
21-1	28381-83000	EMBLEM, shift control	1	1	
21-2	28381-83061	EMBLEM, shift control	1	1	E22,E39

SJ413-4 E1

FIG.46

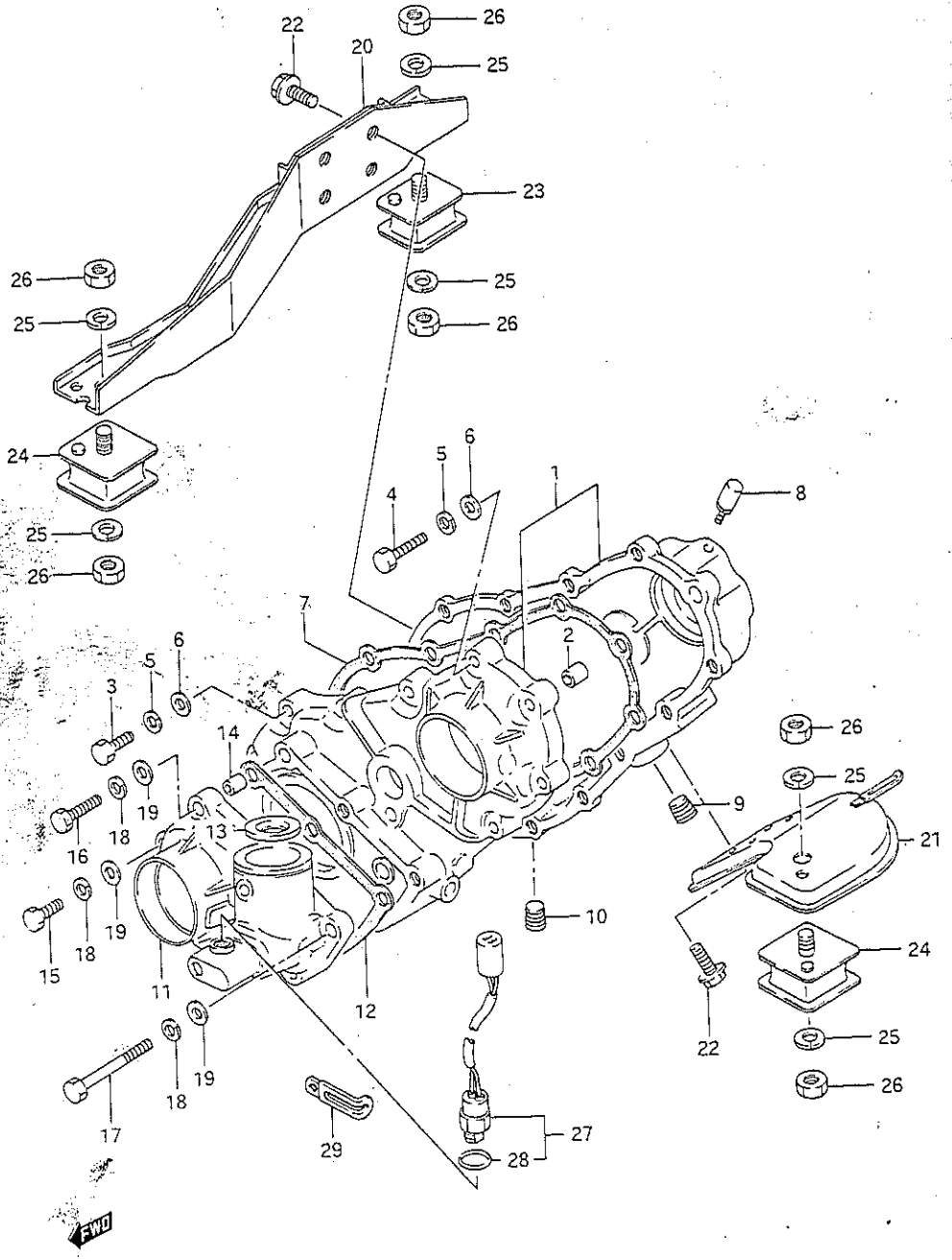

FIG.46 (1-F-14) TRANSFER CASE

REF.NO.	PART NO.	DESCRIPTION	Q'TY Q/W	Q'TY V	REMARKS
1-1	29510-80052	CASE ASSY, transfer	1	1	
1-2	29510-80061	CASE ASSY, transfer	1	1	E14,E15
2	29527-80050	.PIN	2	2	
3	01107-08303	.BOLT, No.1 (8x30)	3	3	
4	01107-08403	.BOLT, No.3 (8x40)	8	8	
5	08321-21083	.LOCK WASHER	11	11	
6	08322-11083	.WASHER	11	11	
7	29525-80050	GASKET, case center	1	1	
8	29515-80050	PLUG, breather	1	1	
9	29945-80051	PLUG, oil filler	1	1	
10	29946-80051	PLUG, oil drain	1	1	
11	29530-80050	CASE, transfer front	1	1	
12	29535-80050	GASKET, case front	1	1	
13	29540-80050	SHEET	1	1	
14	29527-80050	PIN	2	2	
15	01107-08303	BOLT, No.1 (8x30)	2	2	
16	01107-08403	BOLT, No.2 (8x40)	3	3	
17	01107-08803	BOLT, No.3 (8x80)	2	2	
18	08321-21083	LOCK WASHER	7	7	
19	08322-11083	WASHER	7	7	
20	29620-80700	BRACKET, mounting RH	1	1	
21	29630-80700	BRACKET, mounting LH	1	1	
22	01517-08203	BOLT	8	8	
23	29610-83001	MOUNTING, RH rear	1	1	
24	29610-83001	MOUNTING, RH front & LH	2	2	
25	08321-31103	LOCK WASHER	6	6	
26	08310-12103	NUT	6	6	
27	37620-80000	SWITCH, 4 wheel drive	1	1	
28	09280-11002	.O RING	1	1	
29	09404-08413	CLAMP	2	2	

SJ413-4 E1

FIG. 47

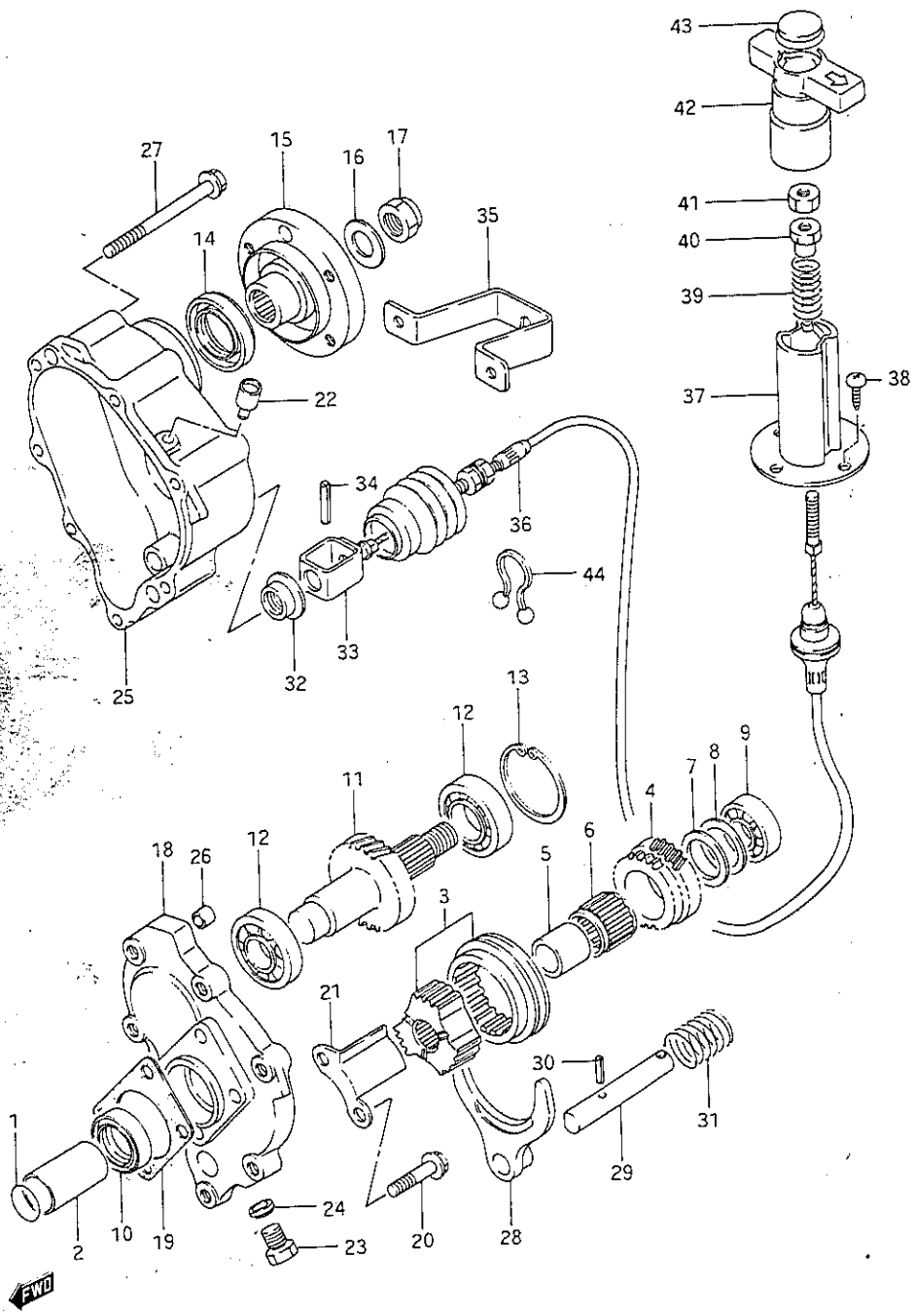

FIG.47 (1-F-15) POWER TAKE OFF (E14,E15)

REF.NO.	PART NO.	DESCRIPTION	Q'TY Q/W	Q'TY V	REMARKS
1	29976-80050	O RING	1	1	
2	29963-80050	SPACER	1	1	
3	29200-80811	HUB SET, PTO drive	1	1	
4	29821-80040	GEAR, PTO drive (NT:22)	1	1	
5	09300-17008	BUSH	1	1	
6	09263-25033	BEARING	1	1	
7	08211-17363	THRUST WASHER (T:0.2)	1	1	
8	08211-17251	THRUST WASHER (T:0.1)	1	1	
9	09262-17023	BEARING	1	1	
10	29974-80050	OIL SEAL	1	1	
11	29831-80040	SHAFT, PTO output (NT:23)	1	1	
12	09262-20079	BEARING	2	2	
13	08331-21479	CIRCLIP	1	1	
14	09283-28010	OIL SEAL	1	1	
15	27110-79000	FLANGE, universal joint	1	1	
16	09160-16006	WASHER (16.5x30x2.6)	1	1	
17	09159-16003	NUT	1	1	
18	29911-80040	CASE, PTO front	1	1	
19	29916-80050	GASKET, PTO	1	1	
20	01517-08253	BOLT	4	4	
21	29928-80040	FENCE, PTO oil	1	1	
22	24821-09001	PLUG, breather	1	1	
23	09247-10001	PLUG, oil filler	2	2	
24	09168-10002	GASKET	2	2	
25	29921-80041	CASE, PTO rear	1	1	
26	04211-09169	KNOCK PIN	2	2	
27	01537-08703	BOLT	7	7	
28	29310-63001	FORK, PTO gear shifting	1	1	
29	29844-80040	SHAFT, PTO gear shifting	1	1	
30	09205-04003	SPRING PIN	1	1	
31	09440-20011	SPRING	1	1	
32	09285-12005	OIL SEAL	1	1	
33	29845-80040	HOOK, PTO control cable	1	1	
34	09205-04001	SPRING PIN	1	1	
35	29847-80040	BRACKET, PTO control cable	1	1	

SJ413-4 E1

FIG.47

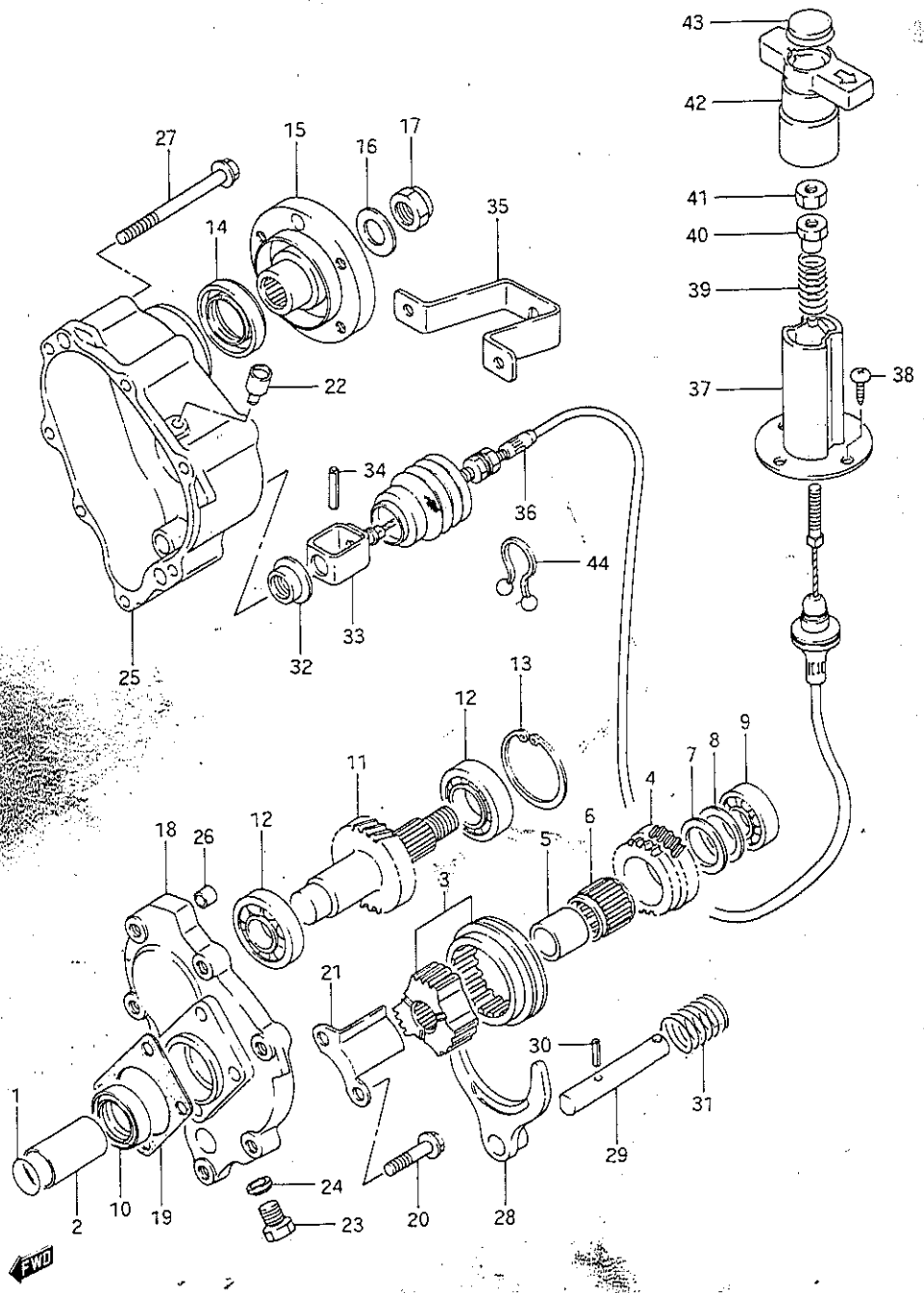

SJ413-4 E1

FIG.47 (1-F-16) POWER TAKE OFF (E14,E15)

REF.NO.	PART NO.	DESCRIPTION	Q'TY Q/W	Q'TY V	REMARKS
36	29850-80040	CABLE ASSY, PTO control	1	1	
37	29841-80040	GUIDE, PTO control cable	1	1	
38	03241-06123	SCREW	4	4	
39	09440-14017	SPRING	1	1	
40	27963-80002	ADJUSTER, PTO control	1	1	
41	08310-22063	NUT	1	1	
42	27960-80000	KNOB, PTO control	1	1	
43	27962-80001	CAP, control knob	1	1	
44	09408-00031	CLAMP	1	1	

SJ413-4 E1

FIG.48

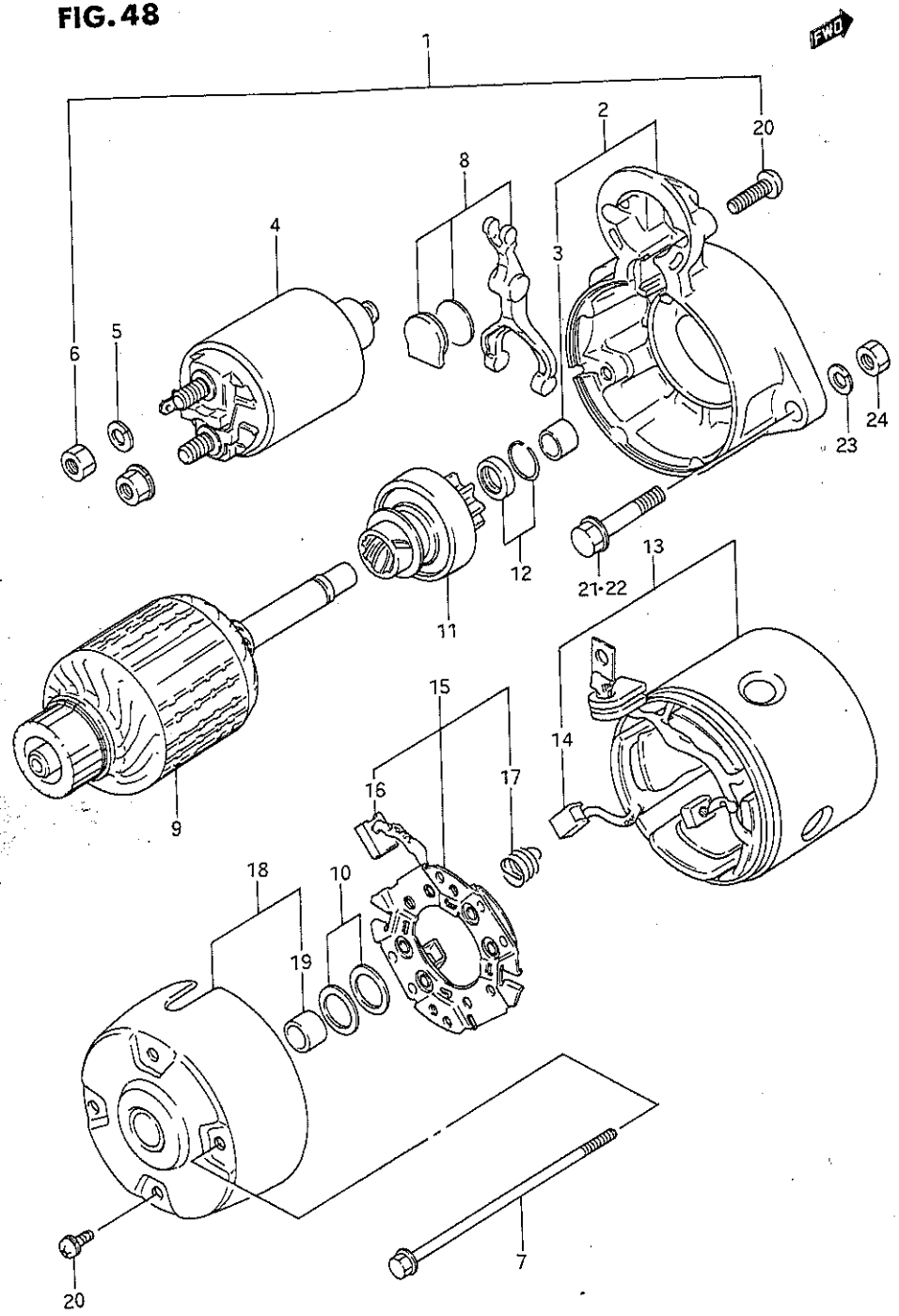

SJ413-4 E1

FIG.48 (1-G- 2) STARTING MOTOR

REF.NO.	PART NO.	DESCRIPTION	Q'TY Q/W	Q'TY V	REMARKS
1-1	31100-83010	MOTOR ASSY, starting	1	1	
1-2	31100-83030	MOTOR ASSY, starting	1	1	E15,E16,E17
2	31151-83010	.BRACKET, front	1	1	
3	31152-79030	..BUSH	1	1	
4	31220-83020	.SWITCH ASSY	1	1	
5	08321-21086	..LOCK WASHER	1	1	
6	08310-12086	..NUT	1	1	
7	31261-82130	.BOLT	2	2	
8	31191-82030	.LEVER	1	1	
9-1	31311-82030	.ARMATURE	1	1	
9-2	31311-82631	.ARMATURE	1	1	E15,E16,E17
10	31361-79030	.WASHER SET	1	1	
11-1	31320-82130	.CLUTCH ASSY	1	1	
11-2	31320-82631	CLUTCH ASSY	1	1	E15,E16,E17
12	31313-79030	.STOP RING SET	1	1	
13-1	31110-80092	.YOKE ASSY	1	1	
13-2	31110-83030	.YOKE ASSY	1	1	E15,E16,E17
14	31131-80090	..BRUSH (+)	2	2	
15	31173-79030	.HOLDER, brush	1	1	
16	31132-80090	..BRUSH (-)	1	1	
17	31135-72030	..SPRING, brush	3	3	
18	31170-80092	.HOUSING, commutator end	1	1	
19	31172-79030	..BUSH	1	1	
20	31136-79030	.SCREW SET	1	1	
21	01517-08306	BOLT	1	1	
22	01517-08406	BOLT	1	1	
23	08321-21086	LOCK WASHER	1	1	
24	08310-12086	NUT	1	1	

SJ413-4 E1

FIG.49

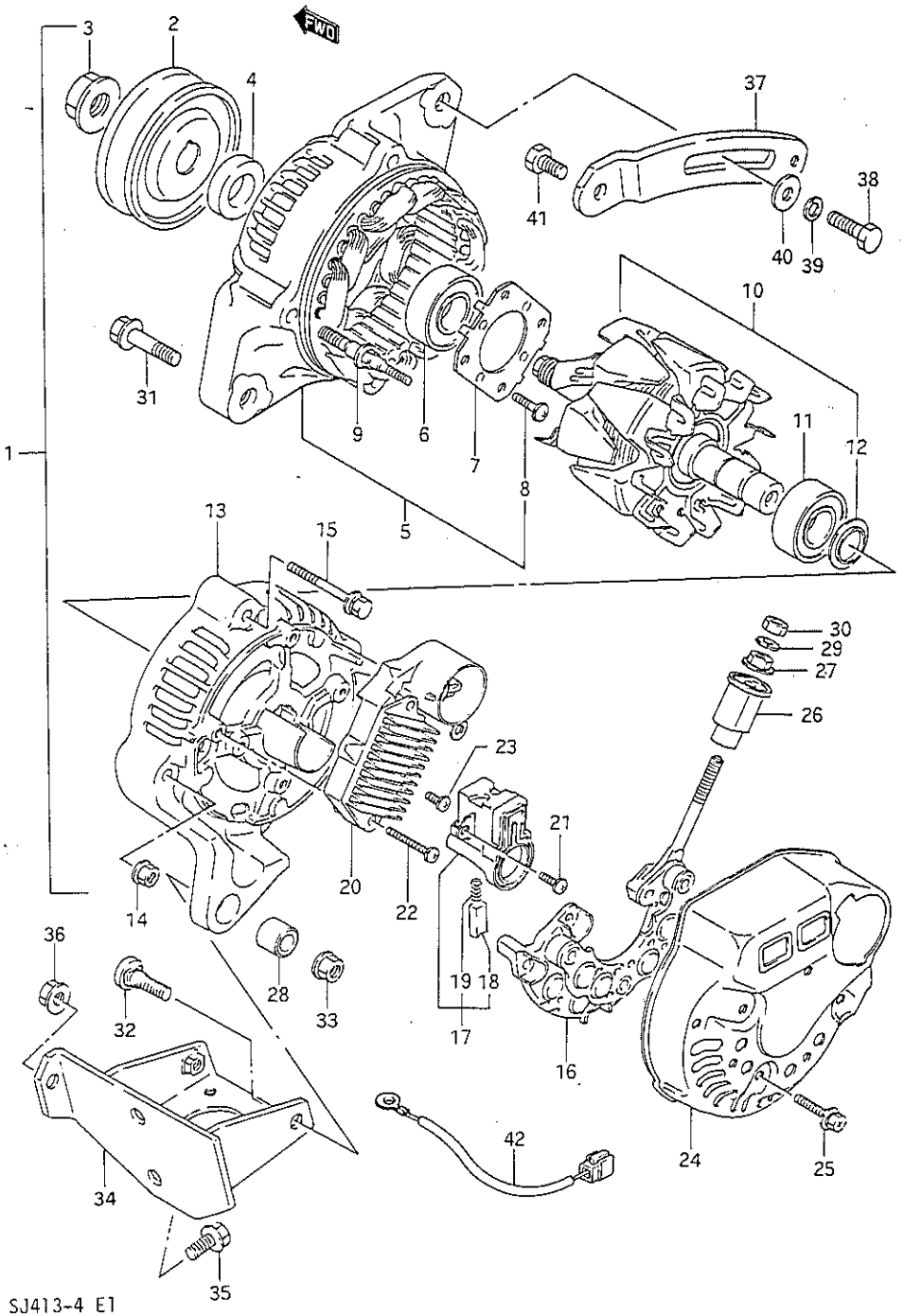

SJ413-4 E1

FIG.49 (1-G- 3) GENERATOR

REF.NO.	PART NO.	DESCRIPTION	Q'TY Q/W	Q'TY V	REMARKS
1	31400-83010	GENERATOR ASSY	1	1	
2	31171-71310	.PULLEY, generator	1	1	
3	31775-85250	.NUT, generator pulley	1	1	
4	31792-85250	.SPACER, generator	1	1	
5	31580-51A10	.FRAME ASSY, drive end	1	1	
6	31582-82610	..BEARING, drive end	1	1	
7	31585-85250	..RETAINER, bearing	1	1	
8	31586-85250	..SCREW, retainer	4	4	
9	31587-85250	..STUD BOLT	2	2	
10	31710-51A10	.ROTOR ASSY, generator	1	1	
11	31612-51A20	..BEARING, end housing	1	1	
12	31613-82610	..COVER, bearing	1	1	
13	31611-86510	.FRAME, end rear	1	1	
14	08310-11056	.NUT	2	2	
15	31651-85250	.BOLT	2	2	
16	31621-86510	.HOLDER ASSY, rectifier	1	1	
17	31656-82611	.HOLDER ASSY, brush	1	1	
18	31631-82610	..BRUSH	2	2	
19	31635-82610	..SPRING, brush	2	2	
20	32500-86510	.REGULATOR ASSY, generator	1	1	
21	31516-85250	.SCREW	6	6	
22	31517-82610	.SCREW	2	2	
23	31515-85250	.SCREW	1	1	
24	31614-86510	.COVER, end rear	1	1	
25	31691-85250	.BOLT	3	3	
26	31514-86510	.INSULATOR, terminal	1	1	
27	08310-11066	.NUT	1	1	
28	31616-85250	.BUSH	1	1	
29	08321-21063	LOCK WASHER	1	1	
30	08310-11063	NUT	1	1	
31	01517-08353	BOLT, front	1	1	
32	09107-08005	BOLT, rear	1	1	
33	08316-26083	NUT	1	1	

SJ413-4 F1

FIG.49

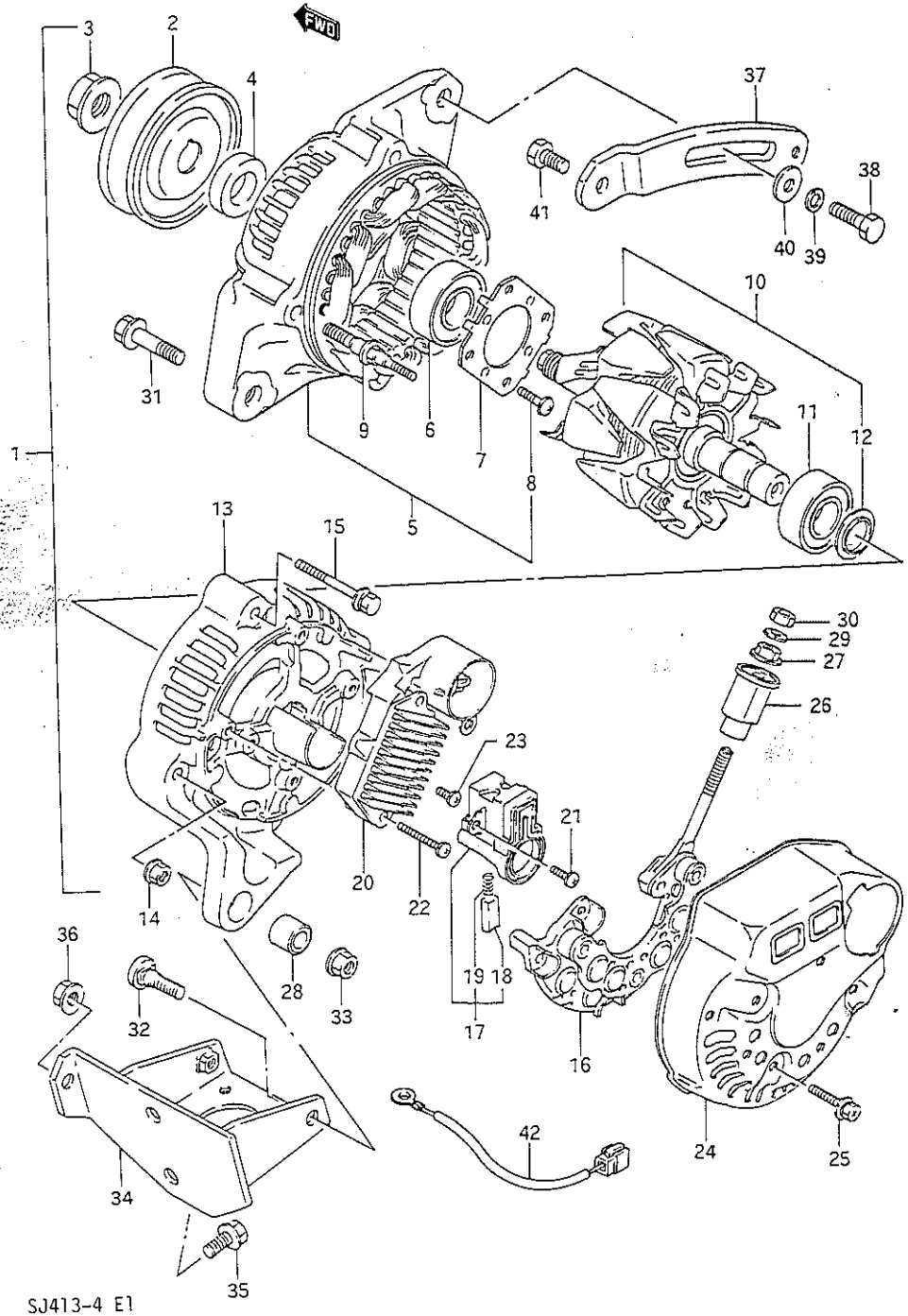

SJ413-4 E1

FIG.49 (1-G- 4) GENERATOR

REF.NO.	PART NO.	DESCRIPTION	Q'TY Q/W	Q'TY V	REMARKS
34	17910-82000	BRACKET, generator	1	1	
35	01517-08203	BOLT	2	2	
36	08316-16083	NUT	1	1	
37	17921-82000	ARM, generator adjusting	1	1	
38	01107-08253	BOLT	1	1	
39	08321-21083	LOCK WASHER	1	1	
40	09160-08030	WASHER (8.2x22x3.2)	1	1	
41	01517-08203	BOLT	1	1	
42-1	36748-80000	WIRE, generator	1	1	
42-2	36748-83010	WIRE, generator	1	1	E17,E18,E39:W/catalyzer

SJ413-4 E1

FIG.50

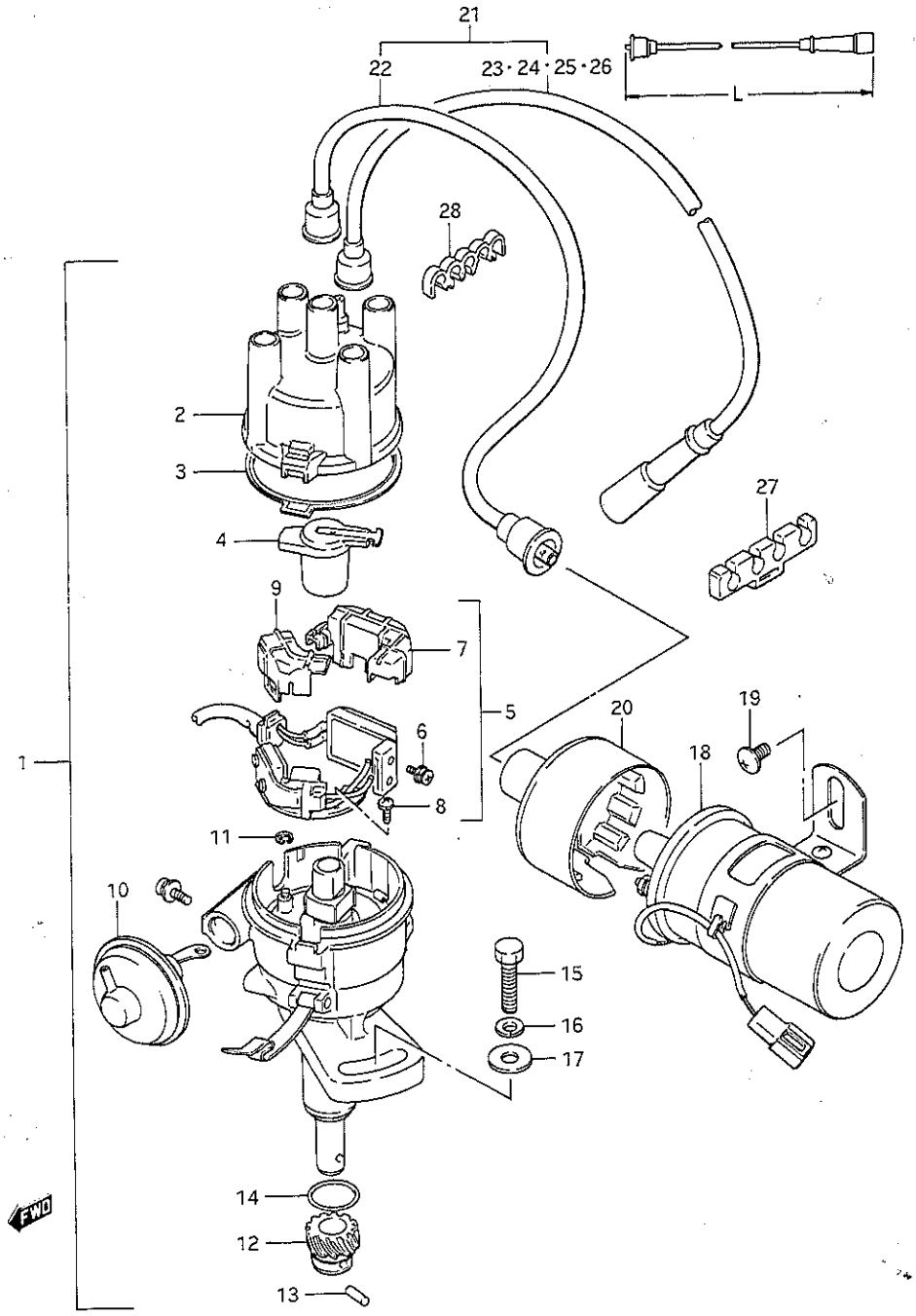

SJ413-4 E1

FIG.50 (1-G- 5) DISTRIBUTOR

REF.NO.	PART NO.	DESCRIPTION	Q'TY Q/W	Q'TY V	REMARKS
1-1	33100-83011	DISTRIBUTOR ASSY	1	1	
1-2	33100-83021	DISTRIBUTOR ASSY	1	1	E2,E6,E15,E16,E19,E22, E25,E30,E34,E35,E41, E43,E46,E54,E68,E98
1-3	33100-83021	DISTRIBUTOR ASSY	1	1	E39:N/catalyzer
2	33321-75110	.CAP	1	1	
3	33324-79610	.SEAL, cap	1	1	
4	33310-82110	.ROTOR ASSY	1	1	
5	33370-83011	.IGNITER ASSY	1	1	
6	33152-82010	..SCREW, igniter	2	2	
7	33297-81060	..COVER, igniter dust	1	1	
8	33151-80020	..SCREW, generator	2	2	
9	33279-80020	.COVER, generator dust	1	1	
10-1	33230-80061	.CONTROLLER ASSY, vacuum	1	1	
10-2	33230-83020	.CONTROLLER ASSY, vacuum	1	1	E2,E6,E15,E16,E19,E22, E25,E30,E34,E35,E41, E43,E46,E54,E68,E98
10-3	33230-83020	.CONTROLLER ASSY, vacuum	1	1	E39:N/catalyzer
11	33239-76410	.E RING	1	1	
12	33267-83010	.GEAR	1	1	
13	33268-83010	.PIN	1	1	
14	33278-52010	.O RING	1	1	
15	09100-08226	BOLT (8x30)	1	1	
16	08321-21083	LOCK WASHER	1	1	
17	09160-08080	WASHER (8.2x22x3.2)	1	1	
18	33410-83010	COIL ASSY, ignition	1	1	
19	02142-06103	SCREW	1	1	
20	33471-77011	CAP, ignition coil	1	1	E2,E15,E16,E19,E22,E25, E34,E35,E39,E41,E54,E68, E98
21	33700-83010	CORD ASSY, hightension	1	1	
22	33710-83010	.CORD, No.1 (L:330)	1	1	
23	33730-83010	.CORD, No.2 (L:640)	1	1	
24	33740-83010	.CORD, No.3 (L:625)	1	1	
25	33760-80020	.CORD, No.4 (L:550)	1	1	
26	33730-80020	.CORD, No.5 (L:580)	1	1	
27	33883-63200	CLAMP, No.1	1	1	
28	33883-83020	CLAMP, No.2	1	1	

Note : E17,E18,E39 (W/catalyzer) See next fig.

SJ413-4 E1

FIG.51

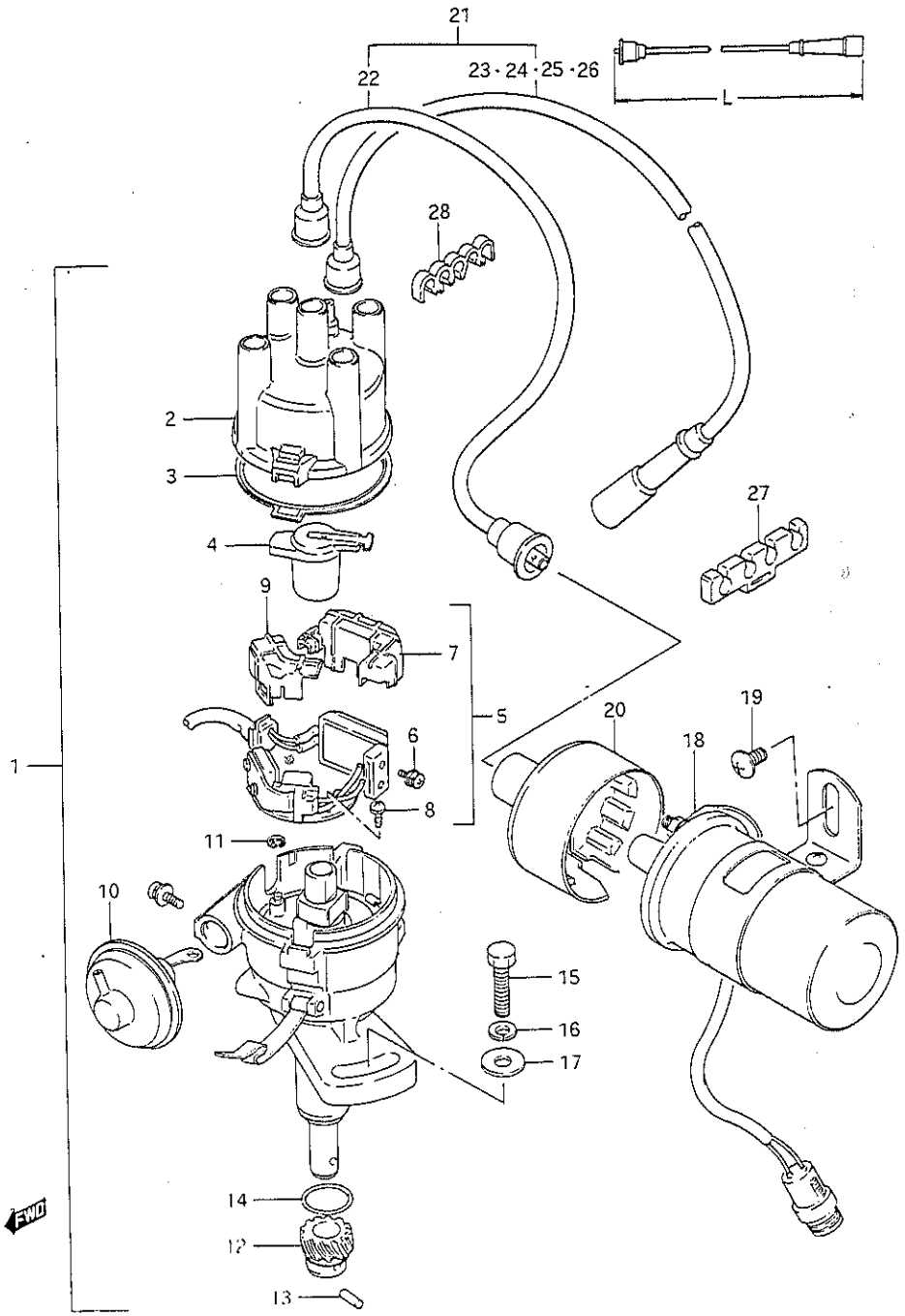

SJ413-4 E1

FIG.51 (1-G- 6) DISTRIBUTOR (E17,E18,E39;W/CATALYZER)

REF.NO.	PART NO.	DESCRIPTION	Q'TY Q/W	Q'TY V	REMARKS
1	33100-83032	DISTRIBUTOR ASSY	1	1	
2	33321-75110	.CAP	1	1	
3	33324-79610	.SEAL, cap	1	1	
4	33310-82010	.ROTOR ASSY	1	1	
5	33370-83032	.IGNITER ASSY	1	1	
6	33152-82010	..SCREW, igniter	2	2	
7	33297-80020	..COVER, igniter dust	1	1	
8	33151-80020	..SCREW, generator	2	2	
9	33279-80020	.COVER, generator dust	1	1	
10	33230-80061	.CONTROLLER ASSY, vacuum	1	1	
11	33239-76410	.E RING	1	1	
12	33267-83010	.GEAR	1	1	
13	33268-83010	.PIN	1	1	
14	33278-52010	.O RING	1	1	
15	09100-08226	BOLT (8x30)	1	1	
16	08321-21083	LOCK WASHER	1	1	
17	09160-08080	WASHER (8.2x22x3.2)	1	1	
18	33410-83020	COIL ASSY, ignition	1	1	
19	02142-06103	SCREW	1	1	
20	33471-77011	CAP, ignition coil	1	1	
21	33700-83020	CORD ASSY, hightension	1	1	
22	33710-83020	.CORD, No.1 (L:330)	1	1	
23	33730-83020	.CORD, No.2 (L:650)	1	1	
24	33740-83020	.CORD, No.3 (L:635)	1	1	
25	33750-83020	.CORD, No.4 (L:560)	1	1	
26	33760-83020	.CORD, No.5 (L:590)	1	1	
27	33883-63200	CLAMP, No.1	1	1	
28	33883-83020	CLAMP, No.2	1	1	

SJ413-4 E1

FIG.52

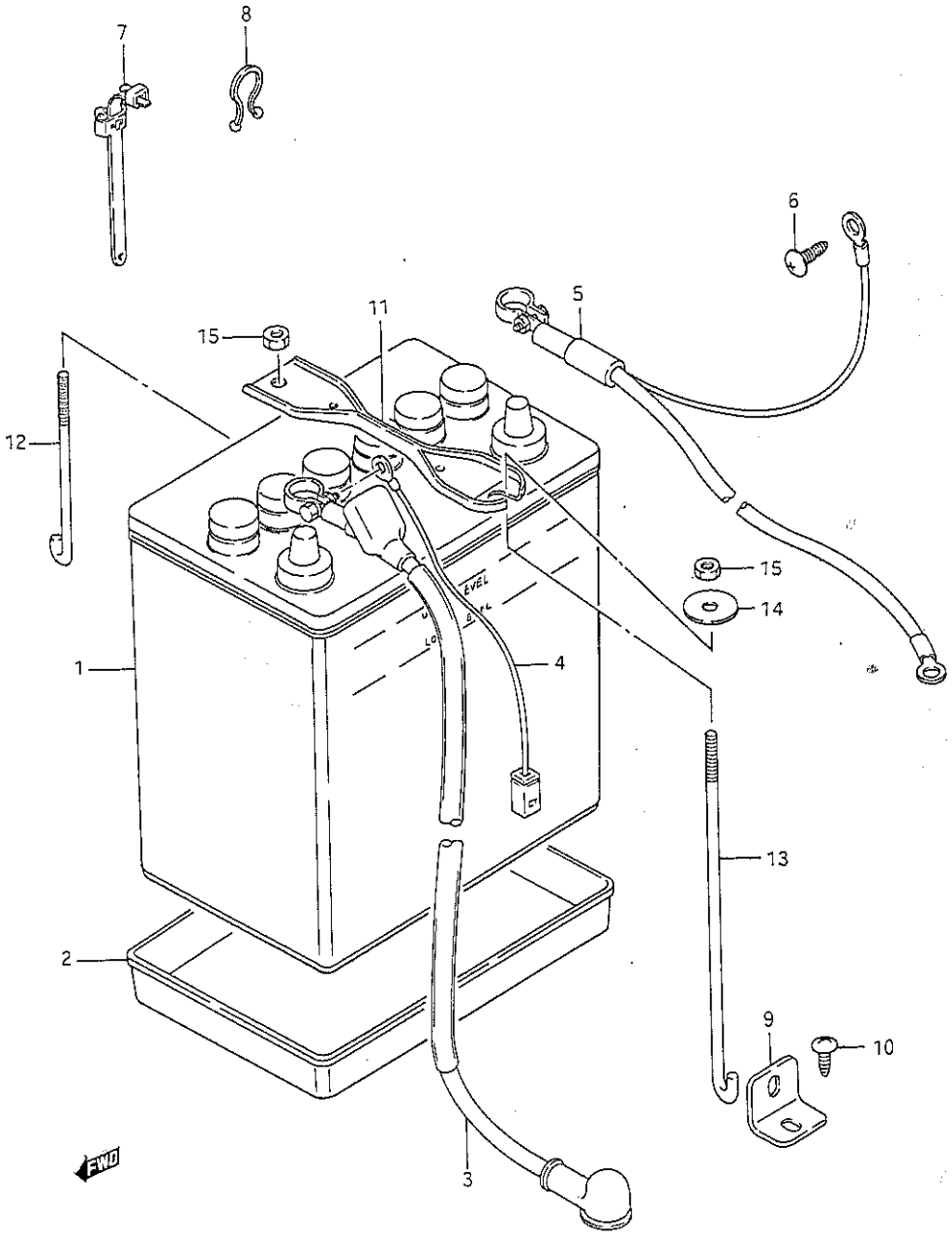

SJ413-4 E1

FIG.52 (1-G- 7) BATTERY

REF.NO.	PART NO.	DESCRIPTION	Q'TY Q/W	Q'TY V	REMARKS
1-1	33610-80020	BATTERY (12V,24AH)	1	1	
1-2	33610-80030	BATTERY (12V,45AH)	1	1	E15,E16,E17
2-1	33661-51020	TRAY, battery	1	1	
2-2	33660-73010	TRAY, battery	1	1	E15,E16,E17
2-3	33660-73010	TRAY, battery	-	1	E81
3-1	33800-70A00	CABLE, starting motor	1	1	
3-2	33800-70A10	CABLE, starting motor	1	1	E15,E16,E17
4-1	36740-80000	.FUSE ASSY, main	1	1	
4-2	36740-80000	.FUSE ASSY, main	2	2	E15,E16,E17
5-1	33850-70A00	CABLE, battery ground	1	1	
5-2	33850-80030	CABLE, battery ground	1	1	E15,E16,E17
6	09129-06002	SCREW	1	1	
7	09407-10402	CLAMP, cable & fuse	1	1	
8	09408-00012	CLAMP, generator lead wire	1	1	
9	72525-80001	STAY, battery bolt	1	1	
10	02142-06106	SCREW	1	1	
11	72511-78000	BAND, battery	1	1	
12	72521-80001	BOLT, battery No.1 (L:107)	1	1	
13	63461-80000	BOLT, battery No.2 (L:208)	1	1	
14	09160-05013	WASHER (5.2x16x1)	1	1	
15	08310-11056	NUT	2	2	

SJ413-4 E1

FIG.53

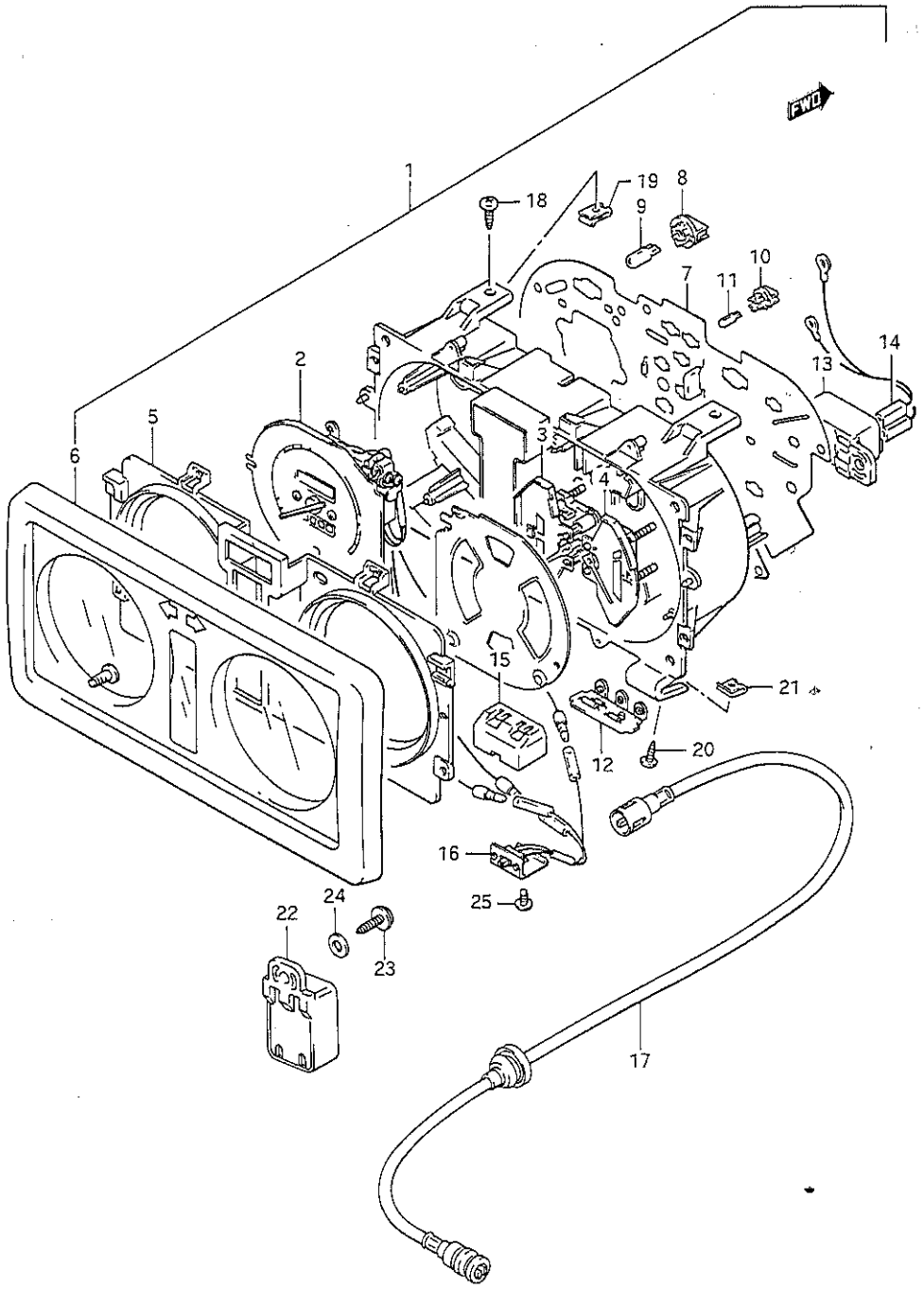

FIG.53 (1-G- 8) SPEEDOMETER (N/TACHOMETER)

REF.NO.	PART NO.	DESCRIPTION	Q'TY Q/W	Q'TY V	REMARKS
1-1	34100-70A50	SPEEDOMETER ASSY (Kilo)	1	1	
1-2	34100-70A60	SPEEDOMETER ASSY (Mile/Kilo)	1	1	
1-3	34100-70A80	SPEEDOMETER ASSY (Mile/Kilo)	1	1	E2,E68
1-4	34100-71A40	SPEEDOMETER ASSY (Kilo)	1	1	E15,E19,E22,E25,E34,E54
1-5	34100-70A90	SPEEDOMETER ASSY (Kilo)	1	1	E18,E39:W/catalyzer
1-6	34100-71A40	SPEEDOMETER ASSY (Kilo)	1	1	E39:N/catalyzer
1-7	34100-71A70	SPEEDOMETER ASSY (Kilo)	1	1	E43
2-1	34120-70A50	.BODY, speedometer (Kilo)	1	1	
2-2	34120-70A60	.BODY, speedometer (Mile/Kilo)	1	1	
2-3	34120-70A80	.BODY, speedometer (Mile/Kilo)	1	1	E2,E68
2-4	34120-71A40	.BODY, speedometer (Kilo)	1	1	E15,E19,E22,E25,E34,E54
2-5	34120-70A90	.BODY, speedometer (Kilo)	1	1	E18,E39:W/catalyzer
2-6	34120-71A40	.BODY, speedometer (Kilo)	1	1	E39:N/catalyzer
2-7	34120-71A70	.BODY, speedometer (Kilo)	1	1	E43
3	34320-70A30	.BODY, fuel meter	1	1	
4	34420-70A30	.BODY, thermometer	1	1	
5	34112-70A30	.PLATE, window	1	1	
6	34113-70A30	.GLASS, front	1	1	
7-1	34152-70A50	.PLATE, meter print	1	1	
7-2	34152-70A80	.PLATE, meter print	1	1	E2,E15,E19,E22,E25, E34,E54,E68
7-3	34152-70A90	.PLATE, meter print	1	1	E18,E39:W/catalyzer
7-4	34152-70A80	.PLATE, meter print	1	1	E39:N/catalyzer
7-5	34152-71A70	.PLATE, meter print	1	1	E43
8	34173-64010	.SOCKET	2	2	
9	09471-12028	.BULB (12V,3.4W)	2	2	

SJ413-4 E1

FIG.53

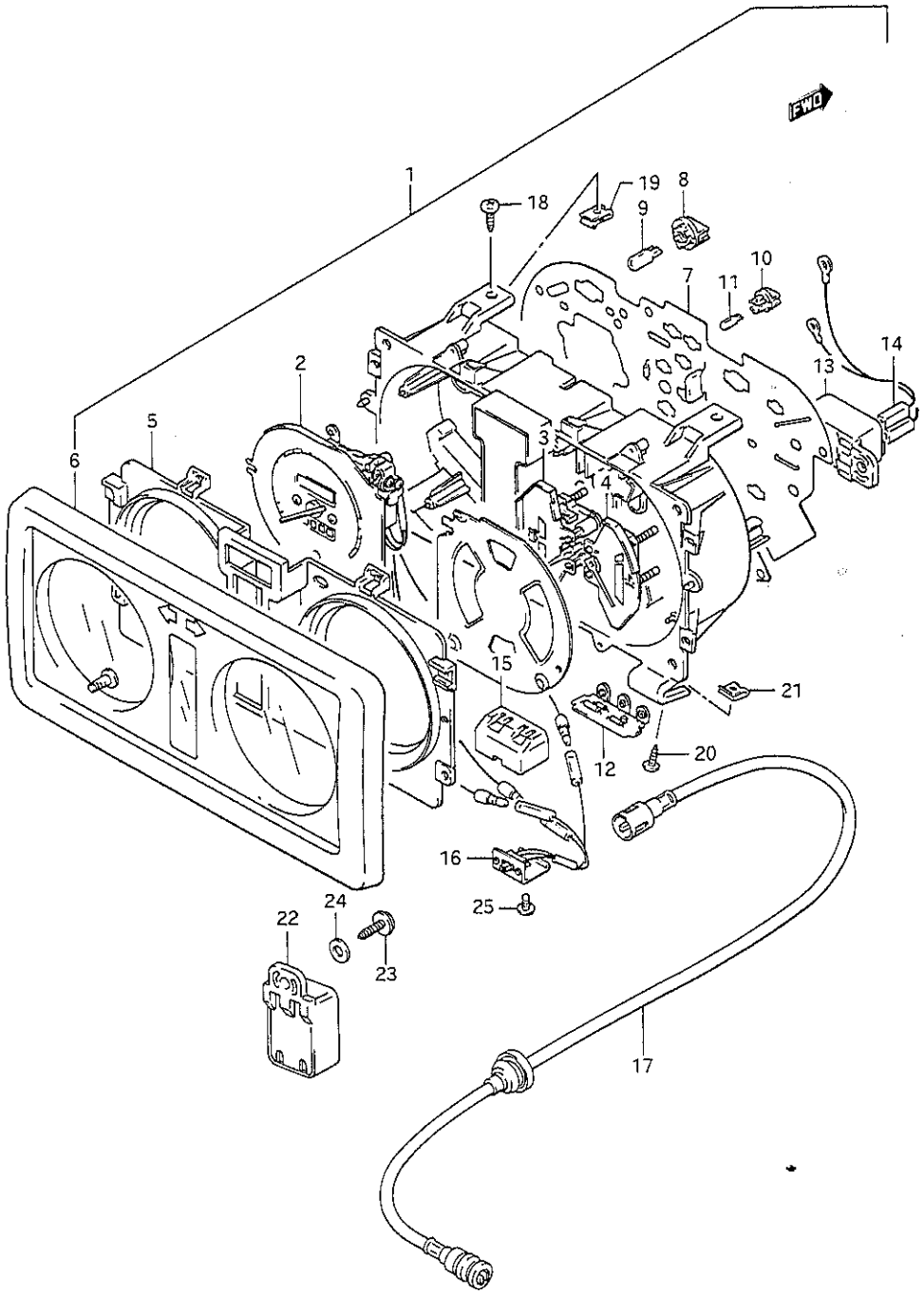

FIG.53 (1-G- 9) SPEEDOMETER (N/TACHOMETER)

REF.NO.	PART NO.	DESCRIPTION	Q'TY Q/W	Q'TY V	REMARKS
10-1	34175-78900	.SOCKET	7	7	
10-2	34175-78900	.SOCKET	10	10	E2,E15,E19,E22,E25, E34,E54,E68
10-3	34175-78900	.SOCKET	11	11	E18,E39:W/catalyzer
10-4	34175-78900	.SOCKET	10	10	E39:N/catalyzer
10-5	34175-78900	.SOCKET	9	9	E43
11-1	09471-12055	.BULB (12V,1.4W)	7	7	
11-2	09471-12055	.BULB (12V,1.4W)	10	10	E2,E15,E19,E22,E25, E34,E54,E68
11-3	09471-12055	.BULB (12V,1.4W)	11	11	E18,E39:W/catalyzer
11-4	09471-12055	.BULB (12V,1.4W)	10	10	E39:N/catalyzer
11-5	09471-12055	.BULB (12V,1.4W)	9	9	E43
12	34154-80360	.PLATE, hazard warning	1	1	E2,E15,E18,E19,E22, E25,E34,E39,E54,E68
13	34160-67010	.BUZZER ASSY	1	1	E43
14	34165-80250	.WIRE	1	1	E43
15	34180-82000	.TIMER	1	1	E43
16	34130-80520	.SWITCH ASSY	1	1	E18,E39:W/catalyzer
17-1	34910-80030	CABLE, speedometer	1	1	LHD
17-2	34910-80020	CABLE, speedometer	1	1	RHD
18	03121-05165	SCREW	1	1	
19	09148-05005	NUT	1	1	
20	03141-05165	SCREW	1	1	
21	09148-05013	NUT	1	1	
22	34160-67010	BUZZER, speed warning	1	1	E43
23	03511-05166	SCREW	1	1	E43
24	08322-21056	WASHER	1	1	E43
25	02142-05086	SCREW	1	1	E18,E39:W/catalyzer

SJ413-4 E1

FIG.54

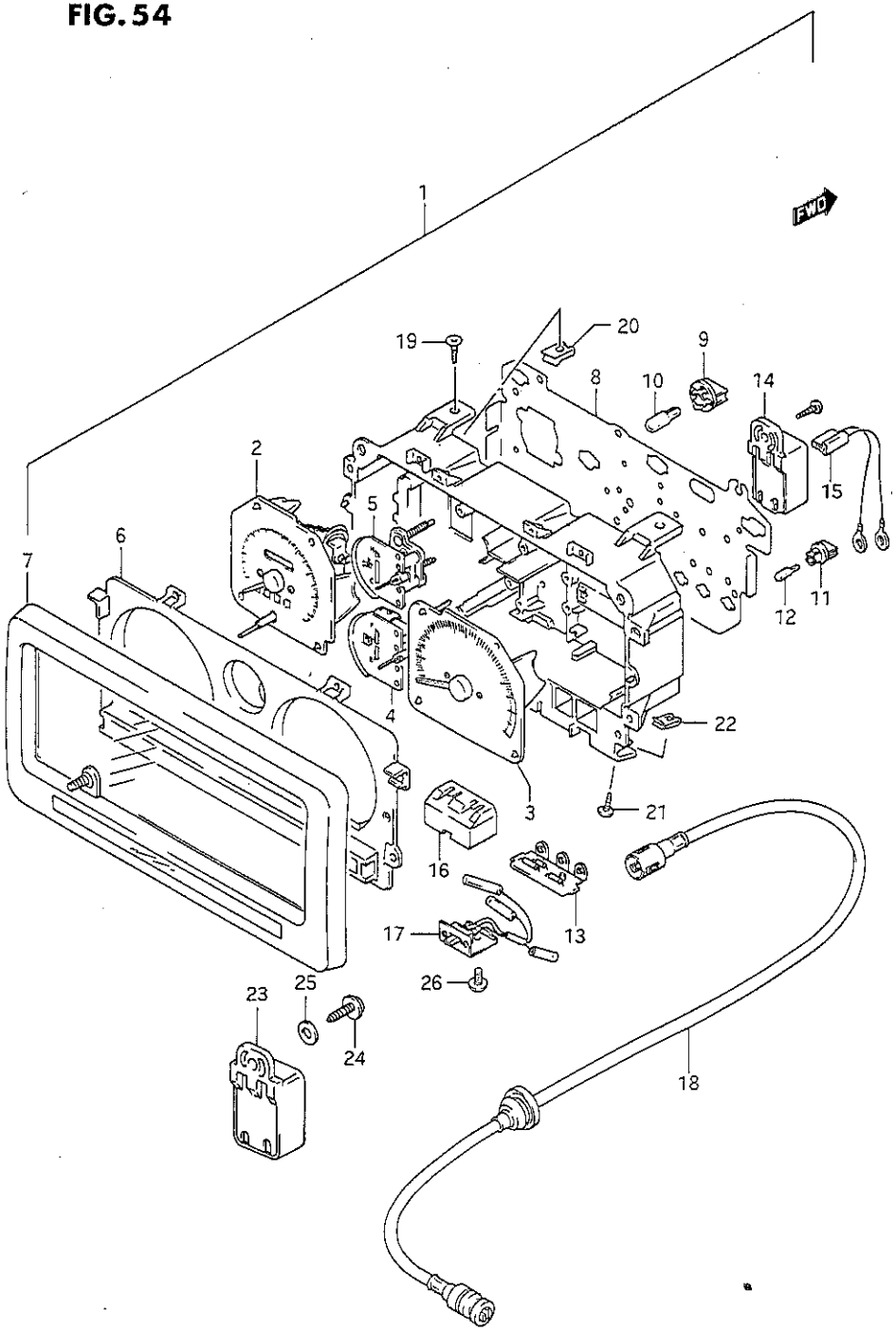

FIG.54 (1-G-10) SPEEDOMETER (W/TACHOMETER)

REF.NO.	PART NO.	DESCRIPTION	Q'TY Q/W	Q'TY V	REMARKS
1-1	34100-70A00	SPEEDOMETER ASSY (Kilo)	1	1	
1-2	34100-70A10	SPEEDOMETER ASSY (Mile/Kilo)	1	1	
1-3	34100-71A00	SPEEDOMETER ASSY (Mile/Kilo)	1	1	E2,E68
1-4	34100-71A50	SPEEDOMETER ASSY (Kilo)	1	1	E6,E15,E16,E19,E22, E25,E34
1-5	34100-71A10	SPEEDOMETER ASSY (Kilo)	1	1	E17,E18,E39 W/catalyzer
1-6	34100-71A50	SPEEDOMETER ASSY (Kilo)	1	1	E39:N/catalyzer
1-7	34100-71A80	SPEEDOMETER ASSY (Kilo)	1	1	E43
2-1	34120-70A00	.BODY, speedometer (Kilo)	1	1	
2-2	34120-70A10	.BODY, speedometer (Kilo/Mile)	1	1	
2-3	34120-71A00	.BODY, speedometer (Mile/Kilo)	1	1	E2,E68
2-4	34120-71A50	.BODY, speedometer (Kilo)	1	1	E6,E15,E16,E19,E22, E25,E34
2-5	34120-70A20	.BODY, speedometer (Kilo)	1	1	E17,E18,E39 W/catalyzer
2-6	34120-71A50	.BODY, speedometer (Kilo)	1	1	E39:N/catalyzer
2-7	34120-71A80	.BODY, speedometer (Kilo)	1	1	E43
3	34220-70A00	.BODY, tachometer	1	1	
4	34320-70A00	.BODY, fuelmeter	1	1	
5	34420-70A00	.BODY, thermometer	1	1	
6	34112-70A00	.PLATE, window	1	1	
7	34113-70A00	.GLASS, front	1	1	
8-1	34152-70A00	.PLATE, print	1	1	
8-2	34152-71A00	.PLATE, print	1	1	E2,E6,E15,E16,E19,E22, E25,E34,E68
8-3	34152-71A10	.PLATE, print	1	1	E17,E18,E39 W/catalyzer
8-4	34152-71A00	.PLATE, Print	1	1	E39:N/catalyzer
8-5	34152-71A80	.PLATE, print	1	1	E43
9	34173-64010	.SOCKET	4	4	
10	09471-12028	.BULB (12V,3.4W)	4	4	

SJ413-4 E1

FIG.54

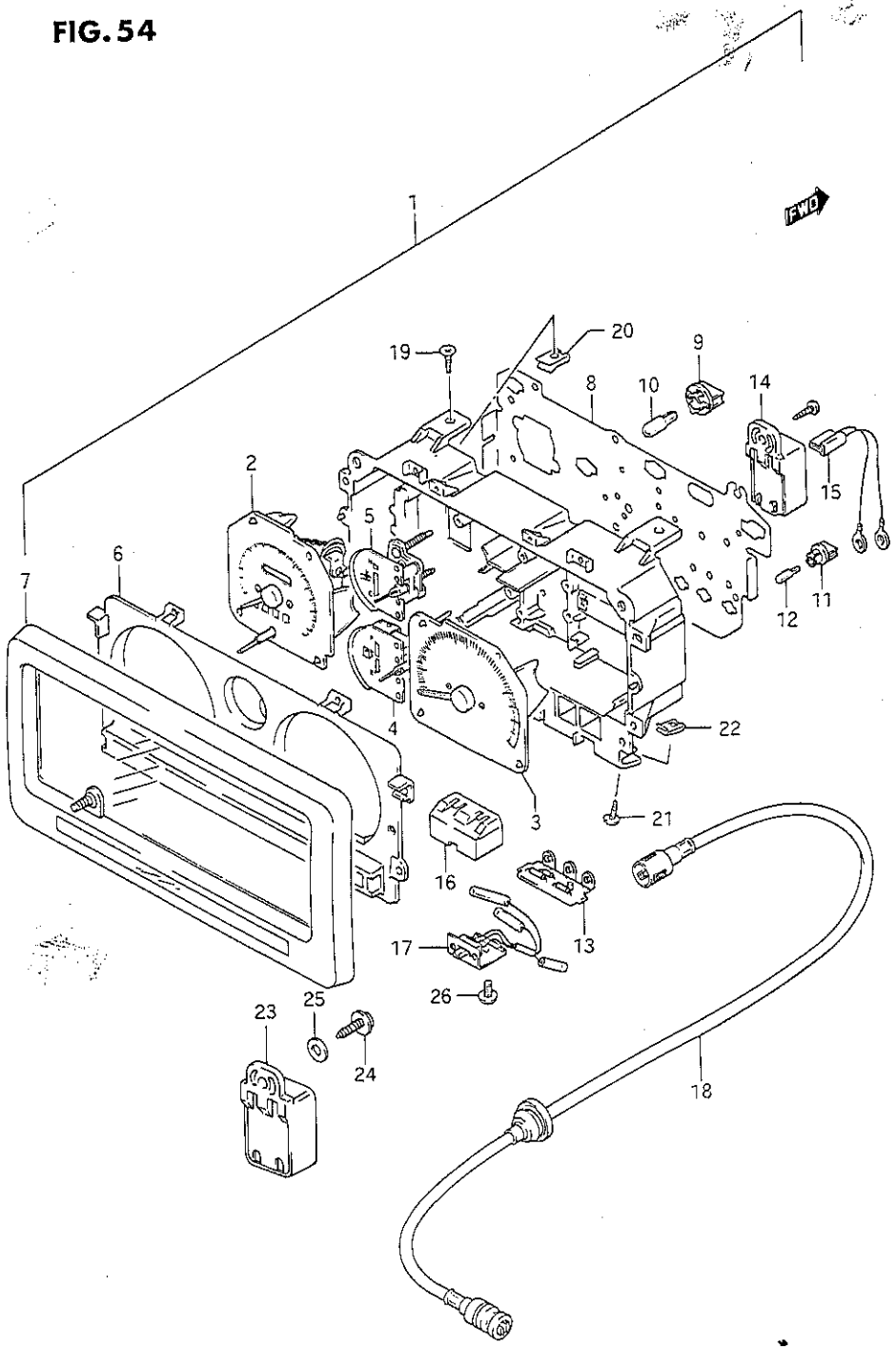

FIG.54 (1-G-11) SPEEDOMETER (W/TACHOMETER)

REF.NO.	PART NO.	DESCRIPTION	Q'TY Q/W	Q'TY V	REMARKS
11-1	34175-78900	.SOCKET	6	6	
11-2	34175-78900	.SOCKET	9	9	E2,E6,E15,E16,E19,E22, E25,E34,E68
11-3	34175-78900	.SOCKET	10	10	E17,E18,E39 W/catalyzer
11-4	34175-78900	.SOCKET	9	9	E39:N/catalyzer
11-5	34175-78900	.SOCKET	8	8	E43
12-1	09471-12055	.BULB (12V,1.4W)	6	6	
12-2	09471-12055	.BULB (12V,1.4W)	9	9	E2,E6,E15,E16,E19,E22, E25,E34,E68
12-3	09471-12055	.BULB (12V,1.4W)	10	10	E17,E18,E39 W/catalyzer
12-4	09471-12055	.BULB (12V,1.4W)	9	9	E39:N/catalyzer
12-5	09471-12055	.BULB (12V,1.4W)	8	8	E43
13	34154-80360	.PLATE, hazard warning	1	1	E2,E6,E15,E16,E17,E18 E19,E22,E25,E34,E39,E68
14	34160-67010	.BUZZER ASSY	1	1	E43
15	34165-80380	.WIRE	1	1	E43
16	34180-82000	.TIMER	1	1	E43
17	34130-80520	.SWITCH ASSY	1	1	E17,E18,E39:W/catalyzer
18-1	34910-80030	CABLE, speedometer	1	1	LHD
18-2	34910-80020	CABLE, speedometer	1	1	RHD
19	03121-05165	SCREW	1	1	
20	09148-05005	NUT	1	1	
21	03141-05165	SCREW	1	1	
22	09148-05013	NUT	1	1	
23	34160-67010	BUZZER, speed warning	1	1	E43
24	03511-05166	SCREW	1	1	E43
25	08322-21056	WASHER	1	1	E43
26	02142-05086	SCREW	1	1	E17,E18:W/catalyzer

SJ413-4 E1

FIG.55

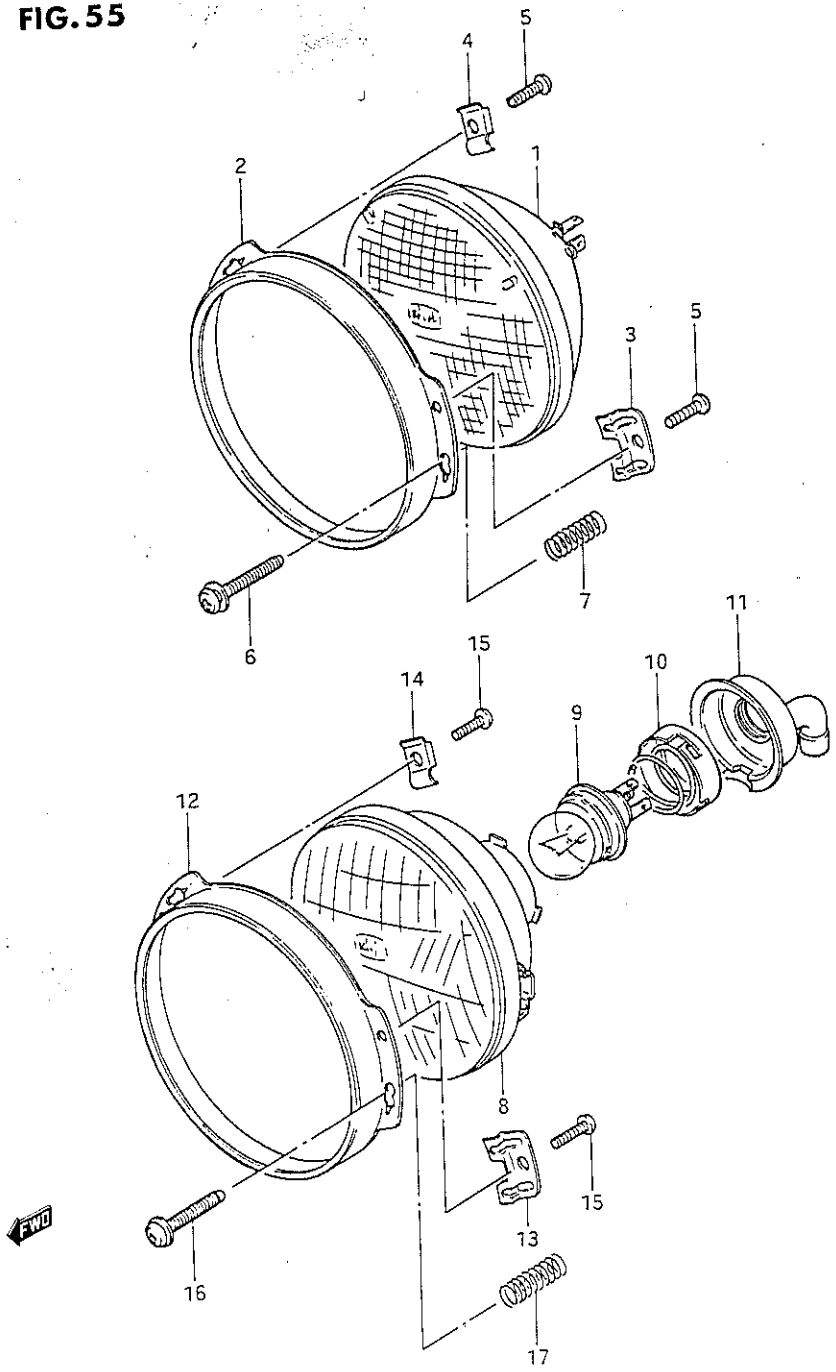

FIG.55 (1-G-12) HEADLAMP

REF.NO.	PART NO.	DESCRIPTION	Q'TY Q/W	Q'TY V	REMARKS
1-1	35121-80000	UNIT, headlamp	2	2	LHD
1-2	35121-51032	UNIT, headlamp	2	2	RHD
2	35131-64031	RIM	2	2	
3	35132-72600	PLATE, No.1	2	2	
4	35136-51030	PLATE, No.2	4	4	
5	02112-04087	SCREW	6	6	
6	35151-78020	SCREW	6	6	
7	35154-51030	SPRING	6	6	
8-1	35121-73040	UNIT	2	2	E2,E6,E27,E68
8-2	35121-72600	UNIT	2	2	E18,E19,E22,E25,E34, E39,E44,E54
8-3	35121-78400	UNIT	2	2	E15,E16,E17
9-1	09471-12048	BULB (Executed locally) (12V,45/40W PHLIPS No.12620)	2	2	E2,E6,E15,E16,E17,E18, E19,E22,E25,E27,E34, E39,E54,E68
9-2	09471-12049	BULB (Executed locally) (12V,45/40W PHILIPS No.12620/86)	2	2	E44
10	35136-34670	SEITER, bulb	2	2	E2,E6,E15,E16,E17,E18, E19,E22,E25,E27,E34, E39,E44,E54,E68
11	35179-72600	COVER	2	2	E2,E6,E15,E16,E17,E18, E19,E22,E25,E27,E34, E39,E44,E54,E68
12	35131-64031	RIM	2	2	E2,E6,E15,E16,E17,E18, E19,E22,E25,E27,E34, E39,E44,E54,E68
13	35132-72600	PLATE, No.1	2	2	E2,E6,E15,E16,E17,E18, E19,E22,E25,E27,E34, E39,E44,E54,E68
14	35136-72600	PLATE, No.2	4	4	E2,E6,E15,E16,E17,E18, E19,E22,E25,E27,E34, E39,E44,E54,E68
15	02112-04087	SCREW	6	6	E2,E6,E15,E16,E17,E18, E19,E22,E25,E27,E34, E39,E44,E54,E68
16	35151-78020	SCREW	6	6	E2,E6,E15,E16,E17,E18, E19,E22,E25,E27,E34, E39,E44,E54,E68
17-1	35154-77000	SPRING	6	6	E2,E6,E15,E16,E17,E18, E19,E22,E25,E27,E34, E39,E54,E68
17-2	35154-51030	SPRING	6	6	E44

SJ413-4 E1

FIG.56

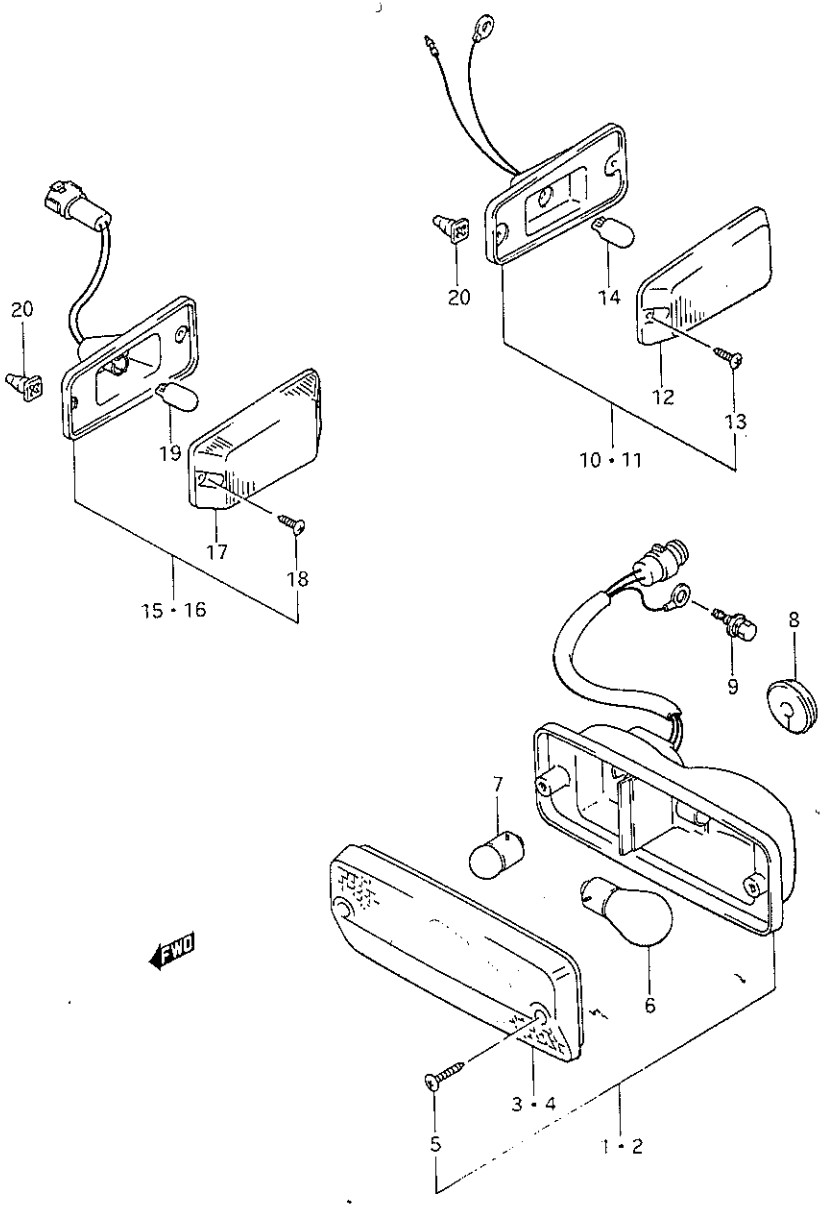

FIG.56 (1-G-13) FRONT LAMP

REF.NO.	PART NO.	DESCRIPTION	Q'TY Q/W	Q'TY V	REMARKS
1-1	35601-80052	LAMP ASSY, combination RH	1	1	lens:amber
1-2	35601-80032	LAMP ASSY, combination RH	1	1	lens:clear
2-1	35602-80052	LAMP ASSY, combination LH	1	1	lens:amber
2-2	35602-80032	LAMP ASSY, combination LH	1	1	lens:clear
3-1	35612-78000	.LENS, RH (Amber)	1	1	
3-2	35612-79012	.LENS, RH (Clear)	1	1	
4-1	35632-78000	.LENS, LH (Amber)	1	1	
4-2	35632-79012	.LENS, LH (Clear)	1	1	
5	03112-04309	.SCREW	4	4	
6-1	09471-12056	.BULB, turn signal (12V,21W)	2	2	W/lens:amber
6-2	09471-12045	.BULB, turn signal (12V,21W)	2	2	W/lens:clear
7-1	09471-12058	.BULB, parking lamp (12V,5W)	2	2	W/lens:amber
7-2	09471-12059	.BULB, parking lamp (12V,5W)	2	2	W/lens:clear
8	09308-08007	GROMMET	2	2	
9	09115-06001	BOLT	2	2	
10	36410-80001	LAMP, side turn signal RH	1	1	
11	36430-80001	LAMP, side turn signal LH	1	1	
12	36412-80000	.LENS	2	2	
13	03112-04169	.SCREW	4	4	
14	09471-12076	.BULB (12V,5W)	2	2	
15	36410-70A00	LAMP, side turn signal RH	1	1	E2,E15,E16,E17,E18, E19,E22,E25,E34,E39, E54,E68
16	36430-70A00	LAMP, side turn signal LH	1	1	E2,E15,E16,E17,E18, E19,E22,E25,E34,E39, E54,E68
17	36412-78400	.LENS	2	2	E2,E15,E16,E17,E18, E19,E22,E25,E34,E39, E54,E68
18	03112-04169	.SCREW	4	4	E2,E15,E16,E17,E18, E19,E22,E25,E34,E39, E54,E68
19	09471-12079	.BULB (12V,4W)	2	2	E2,E15,E16,E17,E18, E19,E22,E25,E34,E39, E54,E68
20	09159-04002	NUT	4	4	

SJ413-4 E1

FIG.57

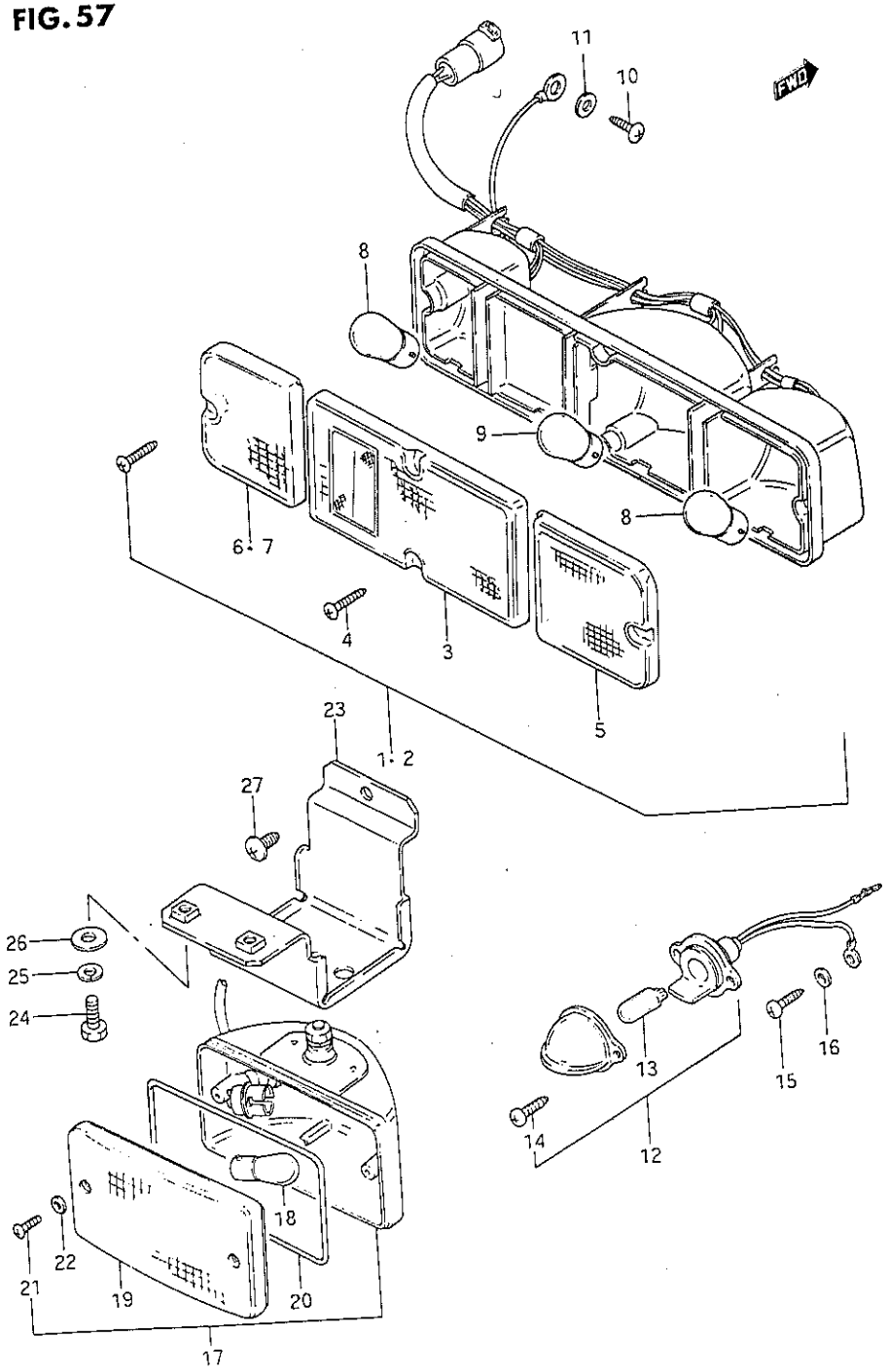

SJ413-4 E1

FIG.57 (1-G-14) REAR LAMP

REF.NO.	PART NO.	DESCRIPTION	Q'TY Q/W	Q'TY V	REMARKS
1-1	35603-80002	LAMP ASSY, combination RH	1	1	
1-2	35603-80013	LAMP ASSY, combination RH	1	1	see note
2-1	35604-80002	LAMP ASSY, combination LH	1	1	
2-2	35604-80013	LAMP ASSY, combination LH	1	1	see note
3-1	35712-80000	.LENS, tail & stop	2	2	
3-2	35712-80011	.LENS, tail & stop	2	2	see note
4	03112-05259	.SCREW	8	8	
5	35662-80000	.LENS, turn signal	2	2	
6	36252-80000	.LENS, back up RH	1	1	
7	36272-80000	.LENS, back up LH	1	1	
8-1	09471-12056	.BULB, turn & back up(12V,21W)	4	4	
8-2	09471-12045	.BULB, turn & back up(12V,21W)	4	4	see note
9-1	09471-12057	.BULB, tail & stop (12V,21/5W)	2	2	
9-2	09471-12046	.BULB, tail & stop (12V,21/5W)	2	2	see note
10	03111-05126	SCREW, earth	2	2	
11	08322-21056	WASHER	2	2	
12-1	35910-80001	LAMP ASSY, license	2	2	
12-2	35910-80011	LAMP ASSY, license	2	2	see note
13-1	09471-12076	.BULB (12V,5W)	2	2	
13-2	09471-12081	.BULB (12V,5W)	2	2	see note
14	03111-04165	.SCREW	4	4	
15	03111-05126	SCREW	2	2	
16	08322-21056	WASHER	2	2	

Note : E2,E6,E15,E16,E17,E18,E19,E22,E25,E27,E34,E39,E44,E54,E68

SJ413-4 E1

FIG.57

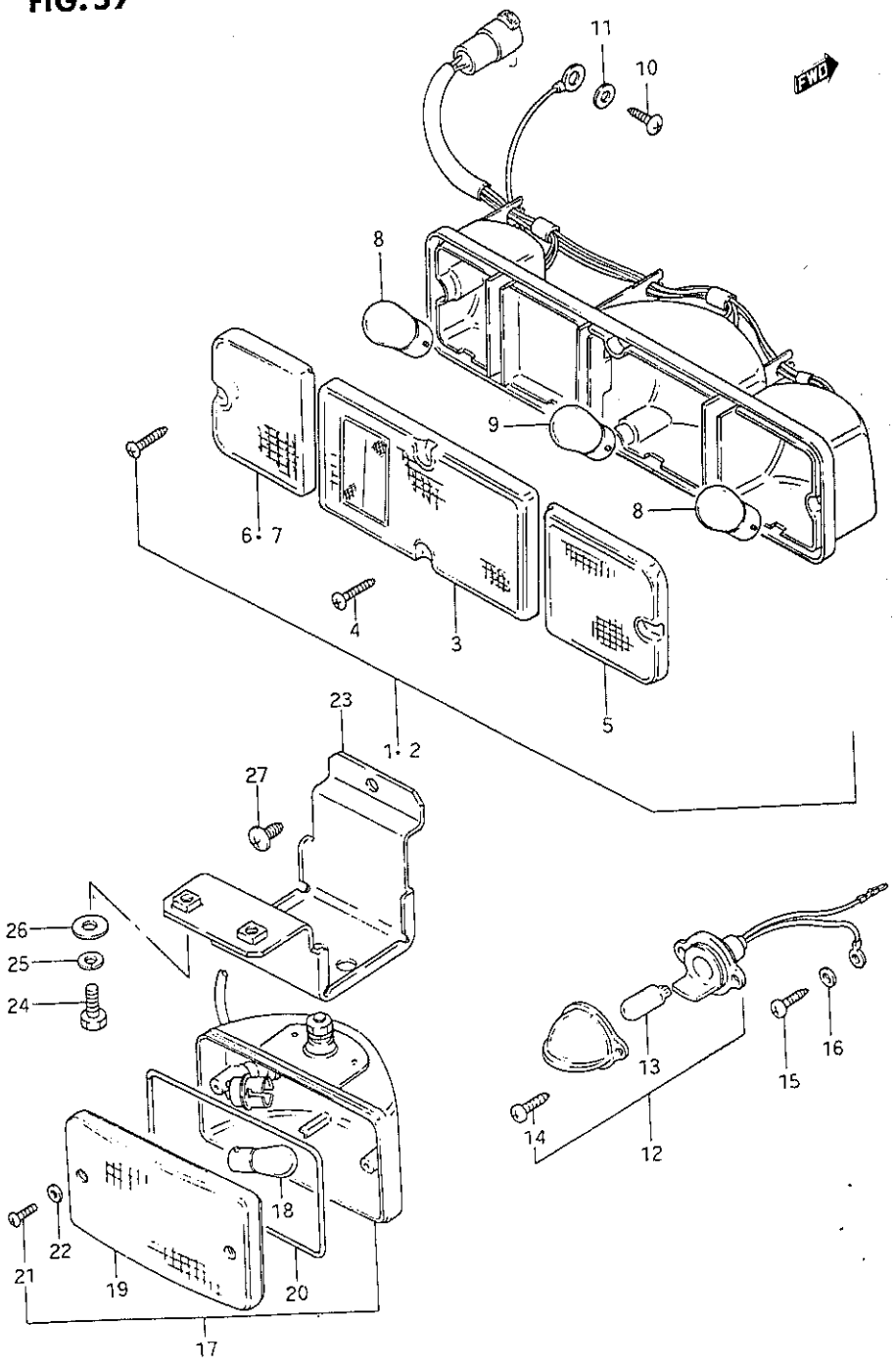

SJ413-4 E1

FIG.57 (1-G-15) REAR LAMP

REF.NO.	PART NO.	DESCRIPTION	Q'TY Q/W	Q'TY V	REMARKS
17	36570-79000	LAMP ASSY, rear fog	1	1	E2,E16,E17,E18,E19, E22,E25,E34,E39,E54, E68
18	09471-12064	.BULB (12V,21W)	1	1	E2,E16,E17,E18,E19, E22,E25,E34,E39,E54, E68
19	36572-79000	.LENS	1	1	E2,E16,E17,E18,E19, E22,E25,E34,E39,E54, E68
20	36573-79000	.GASKET	1	1	E2,E16,E17,E18,E19, E22,E25,E34,E39,E54, E68
21	03212-04169	.SCREW	2	2	E2,E16,E17,E18,E19, E22,E25,E34,E39,E54, E68
22	35129-04030	.WASHER	2	2	E2,E16,E17,E18,E19, E22,E25,E34,E39,E54, E68
23-1	36580-80001	BRACKET, fog lamp	1	1	E2,E16,E17,E18,E19, E22,E25,E34,E39,E54, E68
23-2	36580-80301	BRACKET, fog lamp	1	-	W E2,E16,E17,E18,E19,E22, E25,E34,E39,E54
24	01107-06166	BOLT	2	2	E2,E16,E17,E18,E19, E22,E25,E34,E39,E54, E68
25	08321-21066	LOCK WASHER	2	2	E2,E16,E17,E18,E19, E22,E25,E34,E39,E54, E68
26	09160-06019	WASHER	2	2	E2,E16,E17,E18,E19, E22,E25,E34,E39,E54, E68
27	03141-06123	SCREW	1	1	E2,E16,E17,E18,E19, E22,E25,E34,E39,E54, E68

SJ413-4 E1

FIG.58

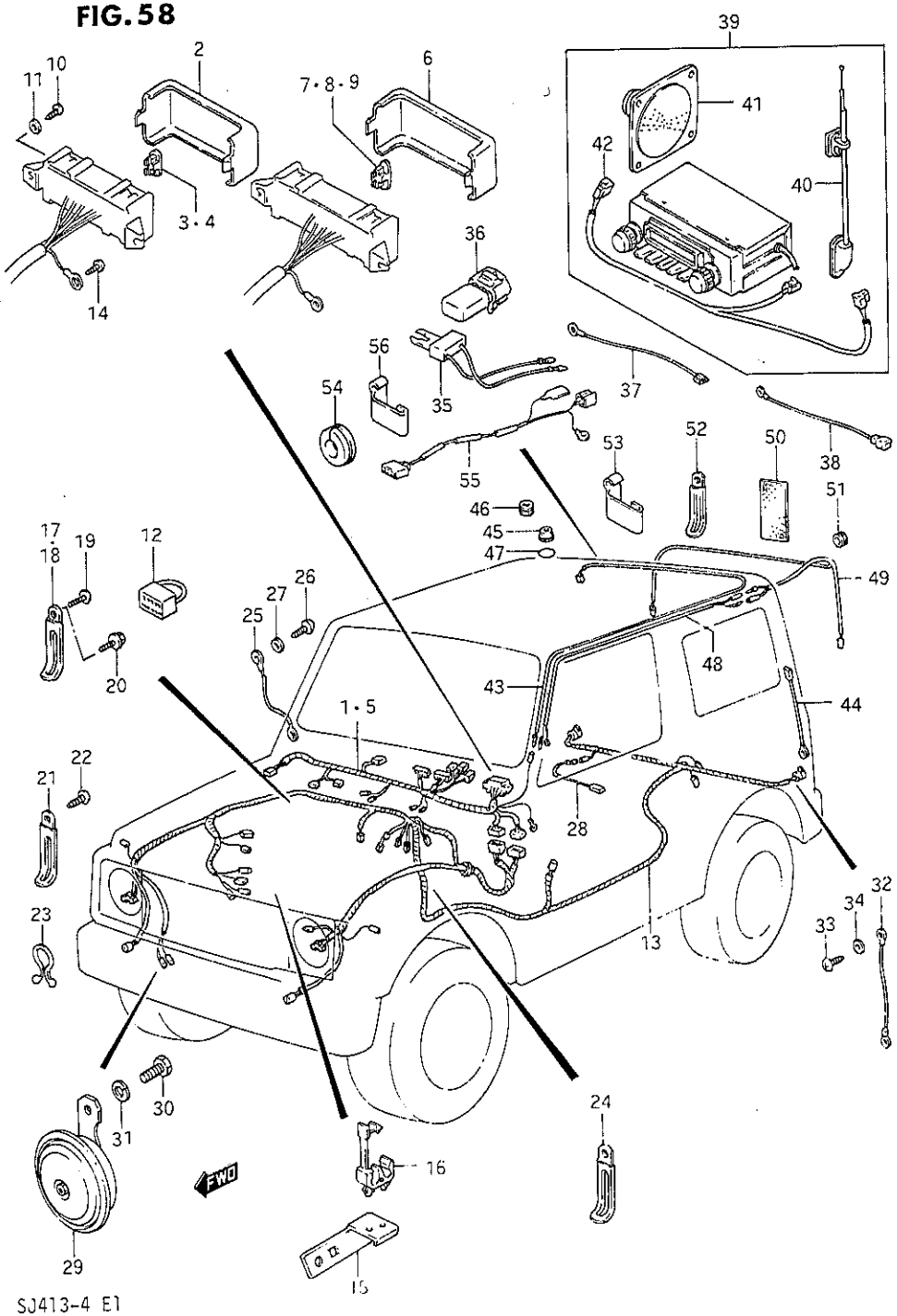

SJ413-4 E1

FIG.58 (1-H- 2) WIRING HARNESS

REF.NO.	PART NO.	DESCRIPTION	Q'TY Q/W	Q'TY V	REMARKS
1-1	36610-70A10	HARNESS, wiring No.1	1	1	LHD
1-2	36610-74A60	HARNESS, wiring No.1	1	-	W:LHD(W/resin top)
1-3	36610-70A00	HARNESS, wiring No.1	1	1	RHD
1-4	36610-74A50	HARNESS, wiring No.1	1	-	W:RHD(W/resin top)
1-5	36610-70A90	HARNESS, wiring No.1	-	1	E27
1-6	36610-71A40	HARNESS, wiring No.1	1	1	E43
1-7	36610-74A10	HARNESS, wiring No.1	1	-	W:E43(W/resin top)
2	36717-80021	.COVER, fuse box	1	1	
3	09481-10101	.FUSE (10A)	AR	AR	
4	09481-15101	.FUSE (15A)	AR	AR	
5-1	36610-70A20	HARNESS, wiring No.1	1	1	E2,E6,E68
5-2	36610-71A20	HARNESS, wiring No.1	1	1	E15
5-3	36610-74A20	HARNESS, wiring No.1	1	-	W:E15(W/resin top)
5-4	36610-70A50	HARNESS, wiring No.1	1	1	E16,E17
5-6	36610-70A30	HARNESS, wiring No.1	1	1	E18,E19,E25,E34, E39,E54
5-7	36610-70A80	HARNESS, wiring No.1	1	1	E22,E25:W/catalyzer
5-8	36610-70A30	HARNESS, wiring No.1	1	1	E25:N/catalyzer
5-9	36610-74A00	HARNESS, wiring No.1	1	-	W:E22,E25(W/resin top)
6	36717-80011	.COVER, fuse box	1	1	
7	09481-05101	.FUSE (5A)	AR	AR	
8	09481-10101	.FUSE (10A)	AR	AR	
9	09481-15101	.FUSE (15A)	AR	AR	
10	03111-05126	SCREW	2	2	
11	08322-21056	WASHER	2	2	
12	36830-80000	WIRE, joint DIM-DIP	-	1	E68:N/DIM-DIP

FIG.58

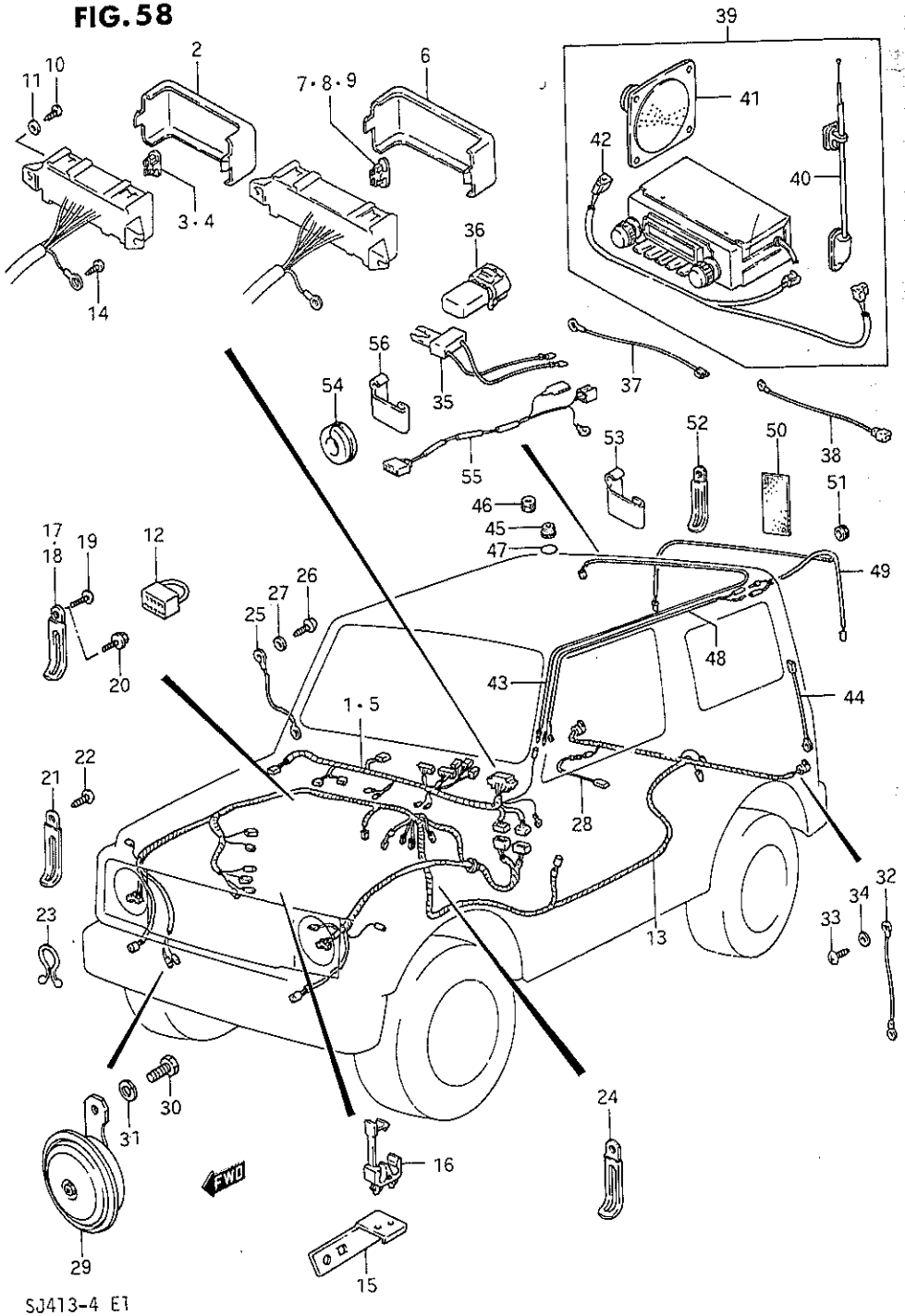

SJ413-4 E1

FIG.58 (1-H- 3) WIRING HARNESS

REF.NO.	PART NO.	DESCRIPTION	Q'TY Q/W	Q'TY V	REMARKS
13-1	36620-70A00	HARNESS, wiring No.2	1	1	
13-2	36620-75A10	HARNESS, wiring No.2	1	-	W:N/resin top
13-3	36620-75A00	HARNESS, wiring No.2	1	-	W:W/resin top
13-4	36620-70A10	HARNESS, wiring No.2	1	1	E2,E6,E68
13-5	36620-74A50	HARNESS, wiring No.2	1	-	W:E2,E6
13-6	36620-70A40	HARNESS, wiring No.2	1	1	E15,E16
13-7	36620-74A40	HARNESS, wiring No.2	1	-	W:E15,E16(N/resin top)
13-8	36620-74A30	HARNESS, wiring No.2	1	-	W:E15(W/resin top)
13-9	36620-70A90	HARNESS, wiring No.2	1	1	E17
13-10	36620-74A90	HARNESS, wirinb No.2	1	-	W:E17
13-11	36620-70A60	HARNESS, wiring No.2	1	1	E18
13-12	36620-74A60	HARNESS, wiring No.2	1	-	W:E18
13-13	36620-70A20	HARNESS, wiring No.2	1	1	E19,E34,E54
13-14	36620-74A10	HARNESS, wiring No.2	1	1	W:E19,E34,E54
13-15	36620-70A70	HARNESS, wiring No.2	1	1	E22,E25:W/catalyzer
13-16	36620-70A20	HARNESS, wiring No.2	1	-	E25:N/catalyzer
13-17	36620-74A00	HARNESS, wiring No.2	1	-	W:E22,E25(W/resin top)
13-18	36620-74A10	HARNESS, wiring No.2	1	-	W:E25(N/resin top)
13-19	36620-70A80	HARNESS, wiring No.2	-	1	E27
13-20	36620-70A60	HARNESS, wiring No.2	1	1	E39,W/catalyzer
13-21	36620-70A20	HARNESS, wiring No.2	1	1	E39:N/catalyzer
13-22	36620-74A60	HARNESS, wiring No.2	1	-	W:E39(W/catalyzer)
13-23	36620-70A20	HARNESS, wiring No.2	1	-	W:E39(N/catalyzer)
14	09129-06002	SCREW, front earth	1	1	
15	36625-83000	BRACKET, harness	1	1	
16	09403-16306	CLAMP, harness & cable	1	1	
17	09404-06404	CLAMP, harness No.1	7	7	
18-1	09404-06405	CLAMP, harness No.2	2	2	
18-2	09404-06405	CLAMP, harness No.2	3	3	E17,E18,E39:W/catalyzer
19	03141-05128	SCREW	7	7	
20	01517-06103	SCREW	2	2	
21	09404-06405	CLAMP, sensor wire	1	1	E17,E18,E39:W/catalyzer
22	02142-05123	SCREW	1	1	E17,E18,E39:W/catalyzer
23	09408-00012	CLAMP, vacuum switching valve lead wire	1	1	E17,E18,E39:W/catalyzer
24	09404-08402	CLAMP, harness No.2	1	1	

SJ413-4 E1

FIG.58

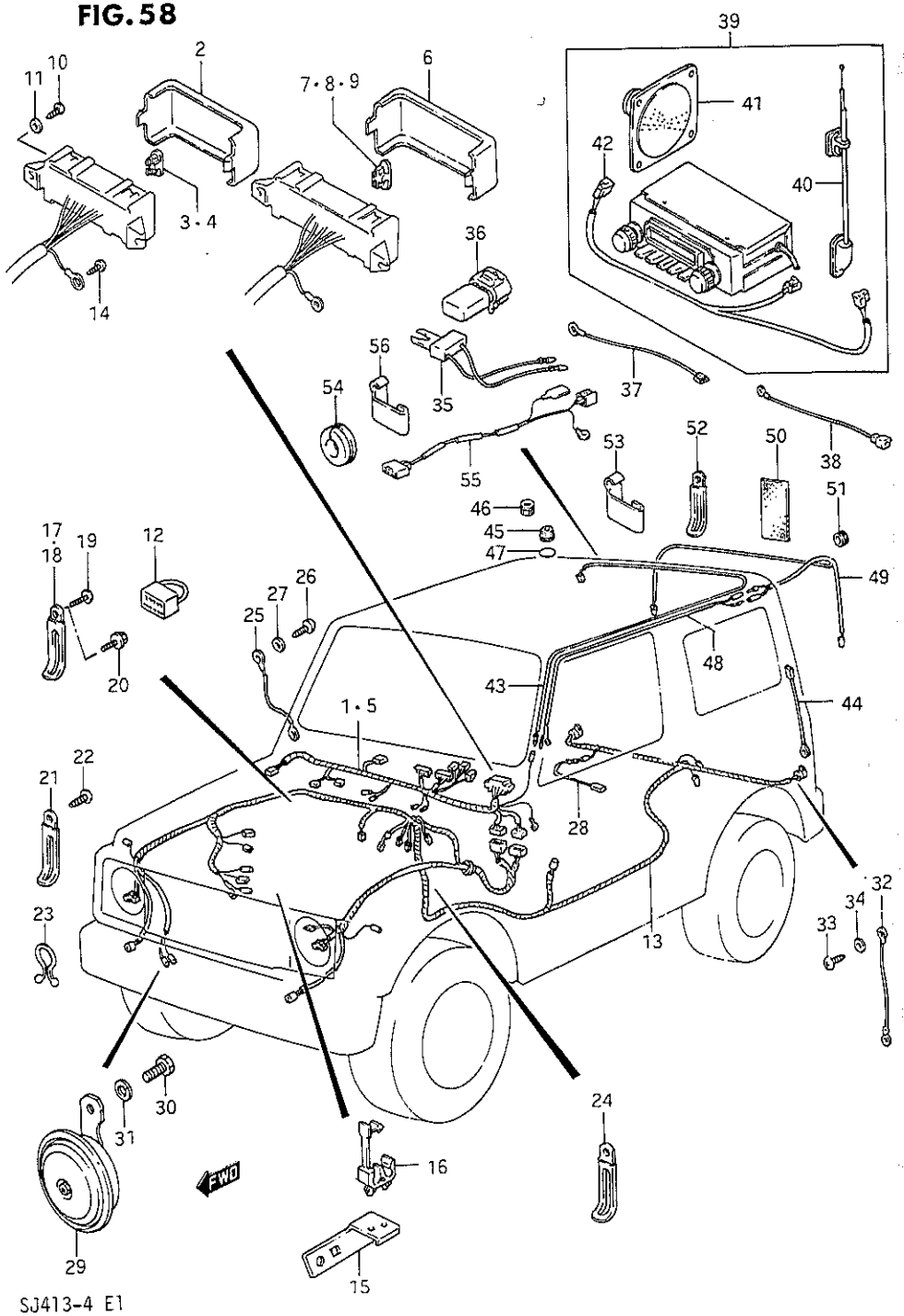

SJ413-4 E1

FIG.58 (1-H- 4) WIRING HARNESS

REF.NO.	PART NO.	DESCRIPTION	Q'TY Q/W	Q'TY V	REMARKS
25	36821-80000	WIRE, window earth	1	-	
26	03112-05129	SCREW	2	-	
27	08322-21057	WASHER	2	-	
28	36822-80001	WIRE, fuel gauge	1	1	
29-1	38500-80010	HORN ASSY	1	1	
29-2	38500-82200	HORN ASSY	1	1	E2,E6,E15,E16,E17,E18, E19,E22,E25,E34,E39, E54,E68
30	01107-08126	BOLT	1	1	
31	08321-21086	LOCK WASHER	1	1	
32	36821-83000	WIRE, earth	1	1	
33	03111-05126	SCREW	1	1	
34	08322-21056	WASHER	1	1	
35	33551-60A00	CONDENSER, noise suppresser	1	1	
36	33552-86000	FILTER ASSY, noise suppresser	1	1	
37	39312-83000	WIRE, noise suppresser	1	1	
38	39312-83010	WIRE, noise suppresser	1	1	
39-1	39100-74A00	RADIO ASSY (AM)	1	1	
39-2	39100-74A10	RADIO ASSY (AM/FM,MONO)	1	1	
39-3	39100-74A20	RADIO ASSY (AM/FM,MULTI)	1	1	Mechanical Tuning
39-4	39100-74A50	RADIO ASSY (AM/FM,MULTI)	1	1	Electric Tuning
39-5	39100-74A40	RADIO ASSY (AM/FM,MULTI)	1	1	E2,E15,E16,E17,E18, E19,E22,E25,E34,E39, E41,E54,E68,E98
39-6	39100-74A30	RADIO ASSY (AM/FM,MULTI)	1	1	E6,E9,E94
39-7	39100-74A80	RADIO ASSY (AM/FM/CASSETTE)	1	1	
39-8	39100-74A70	RADIO ASSY (AM/FM/CASSETTE)	1	1	E2,E15,E16,E17,E18, E19,E22,E25,E34,E39, E41,E54,E68,E98
39-9	39100-74A60	RADIO ASSY (AM/FM/CASSITE)	1	1	E6,E9,E94
40	39250-78300	.ANTENNA	1	1	
41-1	39102-80000	.SPEAKER ASSY	1	1	AM AM/FM,MONO
41-2	39102-70A00	.SPEAKER ASSY	2	2	AM/FM,MULTI AM/FM,CASSETTE
42-1	36855-60A10	.WIRE, speaker	1	1	W/mechanical tuner
42-2	36855-60A00	.WIRE, speaker	1	1	W/electric tuner

SJ413-4 E1

FIG.58

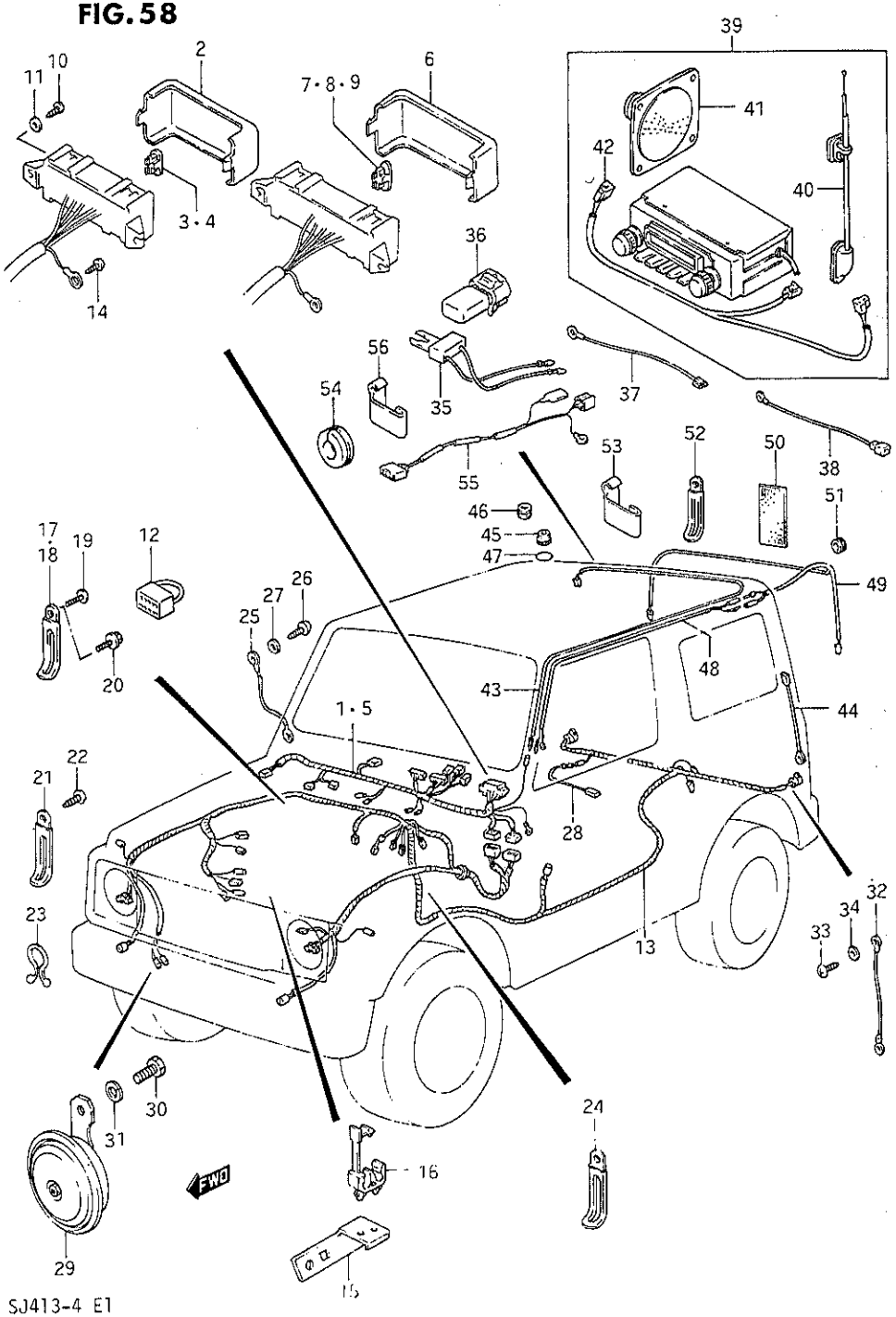

SJ413-4 E1

FIG.58 (1-H- 5) WIRING HARNESS

REF.NO.	PART NO.	DESCRIPTION	Q'TY Q/W	Q'TY V	REMARKS
43	36890-66700	WIRE, defogger	-	1	W/defogger
44	36891-66700	WIRE, defogger earth	-	1	W/defogger
45	09308-06003	GROMMET	-	2	W/defogger
46	09308-05011	GROMMET	-	2	W/defogger
47	67627-70000	FILM, rear defogger switch hole	-	4	N/defogger
48-1	36890-83000	WIRE, rear defogger plus	1	-	Q:W/resin top
48-2	36890-66700	WIRE, rear defogger plus	1	-	W:W/resin top
49-1	36890-83010	WIRE, rear defogger	1	-	Q:W/resin top
49-2	36891-83010	WIRE, rear defogger	1	-	W:W/resin top W/rear wiper
50	36930-82000	CLAMP, rear defogger wire	4	-	W/resin top
51	09308-07009	GROMMET, rear defogger wire	3	-	W:W/resin top
52	09404-06401	CLAMP	1	-	Q:W/resin top
53	09405-00918	CLAMP	1	-	W:W/resin top
54	09308-11006	GROMMET, rear defogger wire	1	-	W:W/rear wiper
55	36845-83003	WIRE, rear defogger & wiper	1	-	W:W/rear wiper
56	36846-83400	CLAMP, rear defogger wire	1	-	W:W/rear wiper

FIG.59

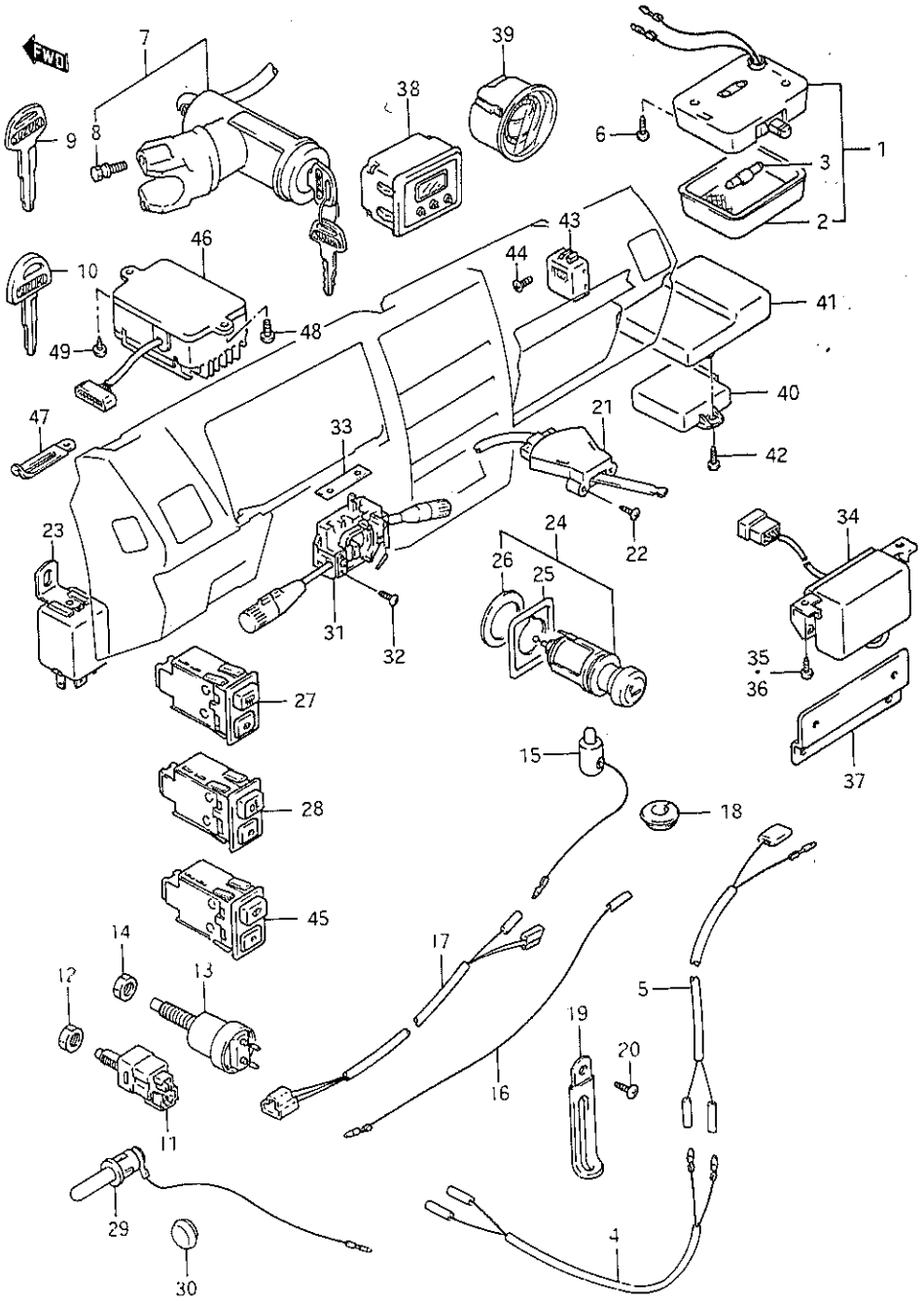

SJ413-4 E1

FIG.59 (1-H- 6) SWITCH

REF.NO.	PART NO.	DESCRIPTION	Q'TY Q/W	Q'TY V	REMARKS
1	36210-79003	LAMP ASSY, room	1	1	
2	36212-79001	.LENS	1	1	
3	09471-12073	.BULB (12V,5W)	1	1	
4	36820-80010	WIRE, room lamp (L:1450)	1	-	
5	36820-80001	WIRE, room lamp (L:2000)	1	1	
6	03212-04109	SCREW	2	2	
7	37100-73303	LOCK ASSY, steering	1	1	
8	37152-66010	.BOLT	2	2	
9	37145-70010	KEY, blank	1	1	OPT
10	37145-73302	KEY, blank	1	1	OPT:E2,E6,E15,E16,E17, E18,E19,E22,E25,E34,E39, E46,E54,E68
11	37740-60A00	SWITCH ASSY, stop	1	1	
12	08310-22106	NUT	1	1	
13	37830-71500	SWITCH ASSY, clutch	1	1	E22,E25:W/catalyzer
14	08310-22106	NUT	1	1	
15	37940-80000	SWITCH ASSY, parking brake	1	1	
16	36850-79500	WIRE, parking brake	1	1	
17	36823-80000	WIRE, parking brake	1	1	E43
18	09308-14006	GROMMET	1	1	
19	09404-06402	CLAMP	2	2	
20	03112-05129	SCREW	1	1	
21	37870-80000	SWITCH ASSY, heater fan	1	1	
22	03212-04109	SCREW	2	2	
23	38610-50A00	RELAY, signal & 4 way	1	1	
24	39400-83810	LIGHTER SET, cigarrette	1	1	
25	39471-78001	.RIM, lighter	1	1	
26	09160-23007	.WASHER	1	1	
27	37860-50A00	SWITCH ASSY, defogger	1	1	W/defogger
28	37280-50A00	SWITCH ASSY, rear fog	1	1	E2,E16,E17,E18,E19, E22,E25,E34,E39,E54,E68
29	37670-80001	SWITCH ASSY, door	1	1	
30	09250-14008	CAP	1	1	

SJ413-4 E1

FIG.59

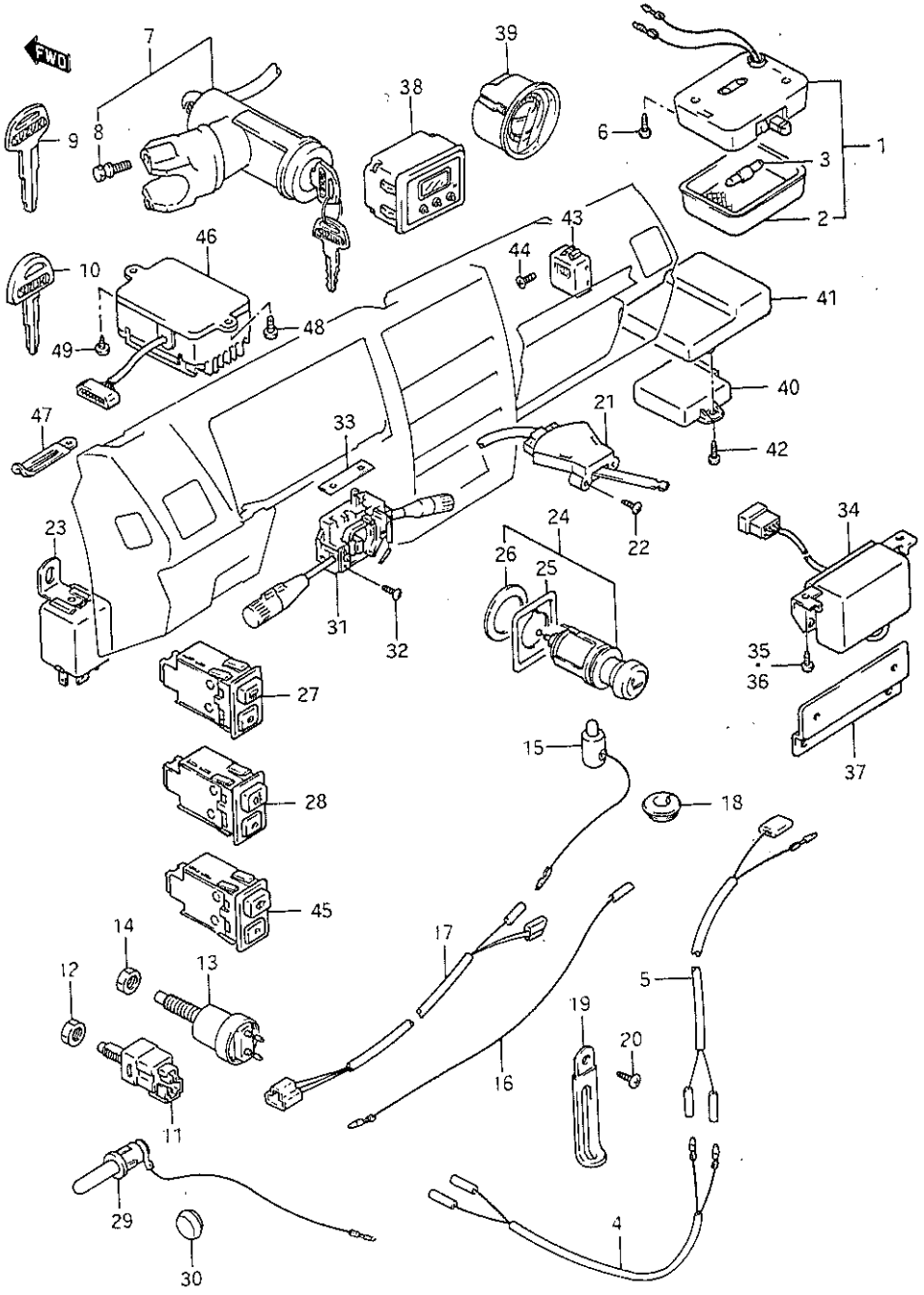

SJ413-4 E1

FIG.59 (1-H- 7) SWITCH

REF.NO.	PART NO.	DESCRIPTION	Q'TY Q/W	Q'TY V	REMARKS
31-1	37400-80510	SWITCH ASSY, combination	1	1	LHD:W/2 speed wiper
31-2	37400-80520	SWITCH ASSY, combination	1	1	LHD:W/Interval wiper
31-3	37400-80410	SWITCH ASSY, combination	1	1	RHD:W/2 speed wiper
31-4	37400-80420	SWITCH ASSY, combination	1	1	RHD:W/Interval wiper
32	03141-04086	SCREW	4	4	
33	37495-80000	SEAT, switch	1	-	
34	38660-82100	CONTROLLER, running light	1	1	E16,E17
35	03141-05128	SCREW	1	1	E16,E17
36	02142-05128	SCREW	1	1	E16,E17
37	38667-83000	BRACKET, controller	1	1	E17
38	34600-50A00	CLOCK ASSY	1	1	JX
39	34850-83000	CLINOMETER ASSY, wiper	1	1	special edition
40	33920-83030	CONTROLLER, emission	1	1	E17,E18,E39:W/catalyzer
41	33925-83000	COVER, controller	1	1	E17,E18,E39:W/catalyzer
42	02142-06506	SCREW	2	2	E17,E18,E39:W/catalyzer
43	38850-83020	CONTROLLER ASSY, fuel	1	1	E22,E25:W/catalyzer
44	02142-06088	SCREW	2	2	E22,E25:W/catalyzer
45	37370-50A00	SWITCH ASSY, rear wiper & washer	1	-	W:W/rear wiper
46	38660-82200	CONTROLLER ASSY, DIM-DIP	1	1	E2
47	09404-06404	CLAMP, DIM-DIP controller	1	1	E2
48	02142-06127	SCREW	1	1	E2
49	03141-05128	SCREW	1	1	E2

SJ413-4 E1

FIG.60

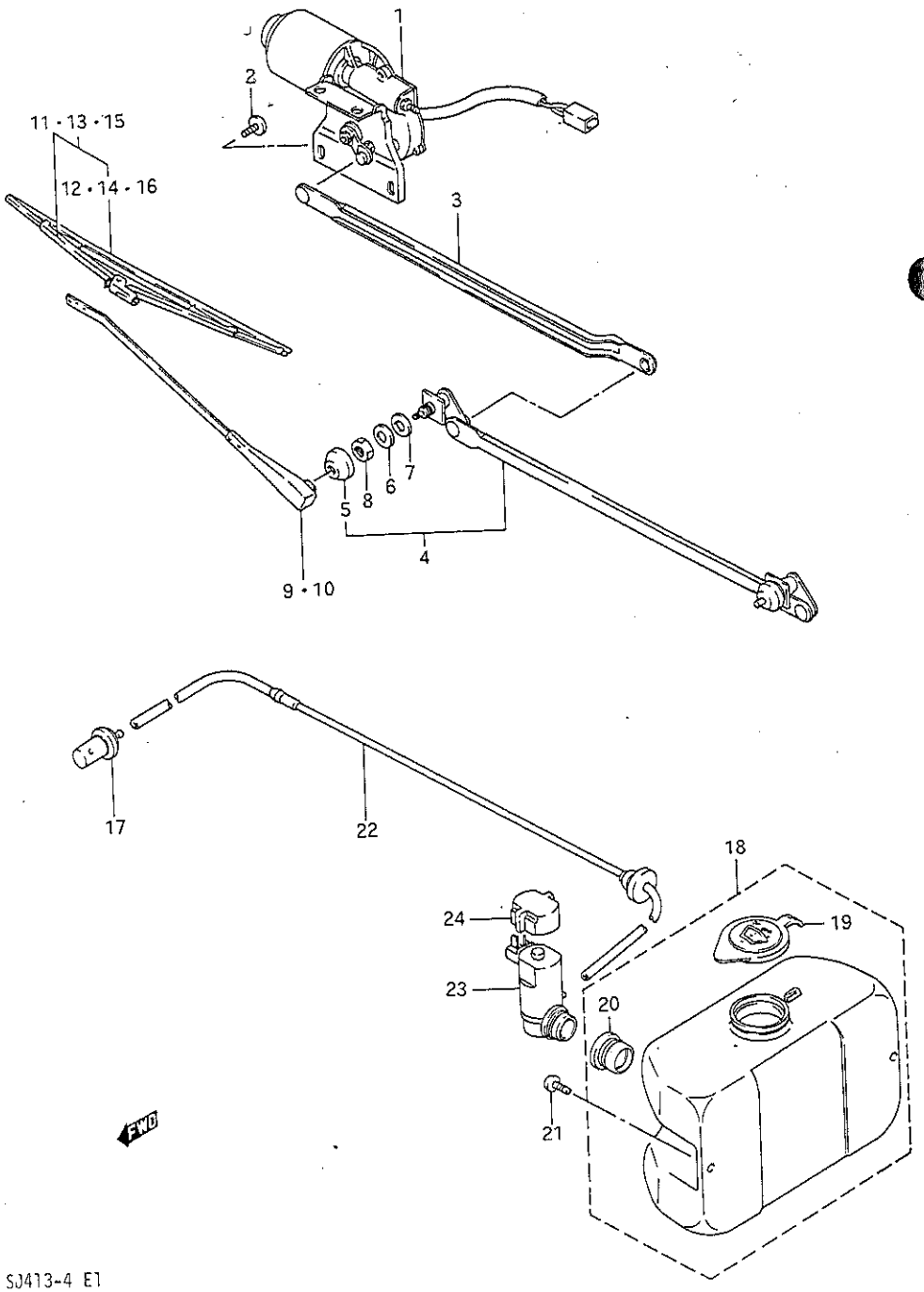

FIG.60 (1-H- 8) FRONT WIPER AND WASHER

REF.NO.	PART NO.	DESCRIPTION	Q'TY Q/W	Q'TY V	REMARKS
1-1	38101-80020	MOTOR ASSY, wiper	1	1	LHD
1-2	38101-80001	MOTOR ASSY, wiper	1	1	RHD
2	02142-06127	SCREW	4	4	
3	38255-80000	ROD, wiper link	1	1	
4-1	38102-80031	LINK ASSY, wiper	1	1	LHD
4-2	38102-70A00	LINK ASSY, wiper	1	1	RHD
5	38274-78000	.CAP	2	2	
6	38271-71310	.WASHER	2	2	
7	38272-71310	.GASKET	2	2	
8	38278-67011	.NUT	2	2	
9-1	38330-80040	ARM ASSY, wiper RH	1	1	LHD
9-2	38310-70A00	ARM ASSY, wiper RH	1	1	RHD
9-3	38310-70A10	ARM ASSY, wiper RH	1	1	E2,E6,E27
10-1	38310-80040	ARM ASSY, wiper LH	1	1	LHD
10-2	38330-70A00	ARM ASSY, wiper LH	1	1	RHD
10-3	38330-70A10	ARM ASSY, wiper LH	1	1	E2,E6,E27
11	38340-63641	BLADE ASSY, wiper	2	2	LHD
12	38346-80020	.BLADE	2	2	LHD
13	38340-70A00	BLADE ASSY, wiper	2	2	RHD
14	38346-67700	.BLADE	2	2	RHD
15	38340-70A10	BLADE ASSY, wiper	2	2	E2,E6,E27
16	38346-80020	.BLADE	2	2	E2,E6,E27
17	38480-80000	NOZZLE, washer	1	1	
18	38450-80000	TANK ASSY, washer	1	1	
19	38452-80000	.CAP, washer tank	1	1	
20	38453-75000	.GROMMET	1	1	
21	02142-06126	SCREW	2	2	
22	38490-80010	HOSE ASSY	1	1	
23	38410-66113	PUMP ASSY	1	1	
24	38837-79500	COVER, pump	1	1	

Note : W:W/REAR WIPER see next fig.

SJ413-4 E1

FIG.61

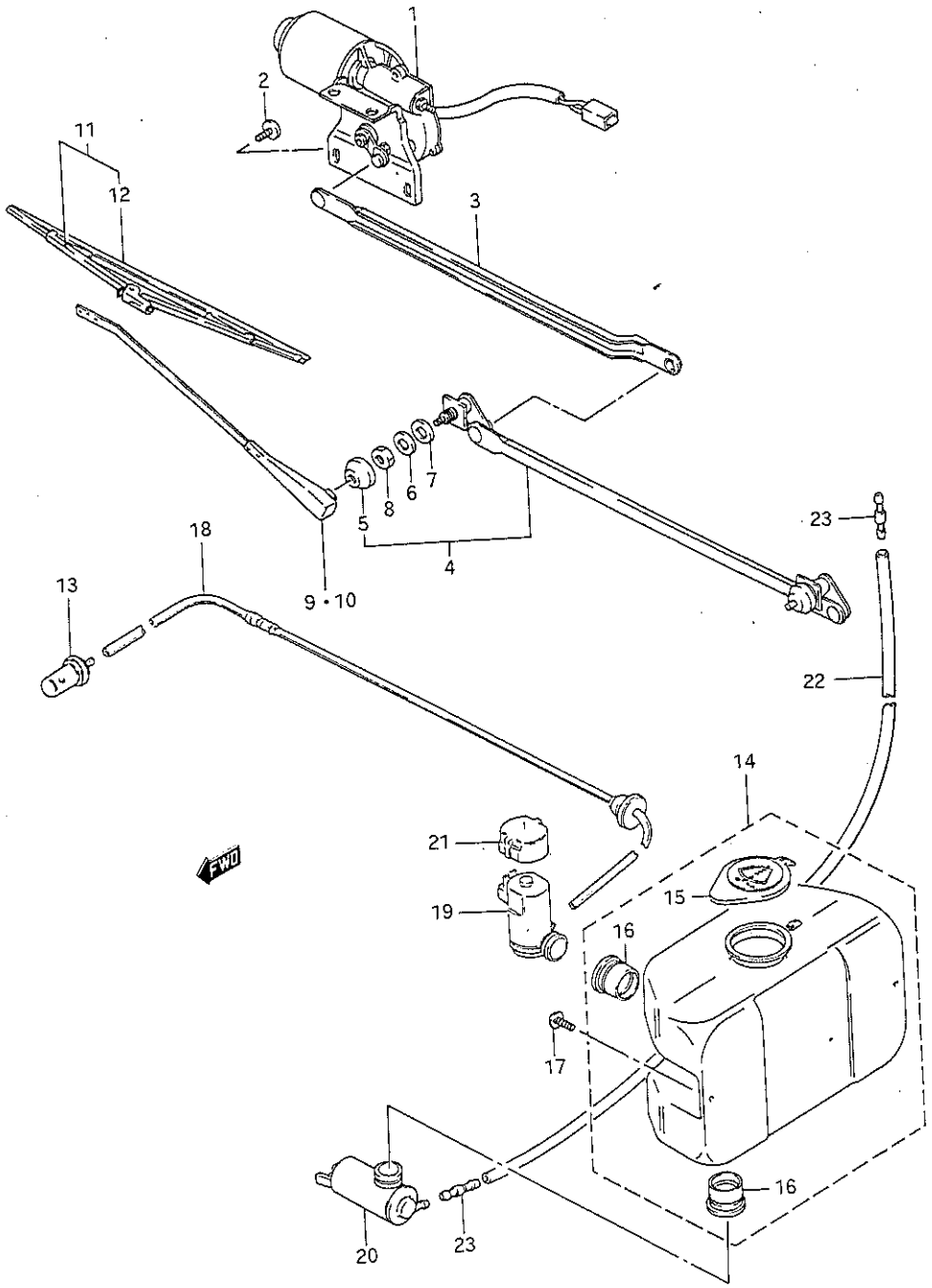

SJ413-4 E1

FIG.61 (1-H- 9) FRONT WIPER AND WASHER (W:W/REAR WIPER)

REF.NO.	PART NO.	DESCRIPTION	Q'TY W	REMARKS
1-1	38101-80020	MOTOR ASSY, wiper	1	LHD
1-2	38101-80001	MOTOR ASSY, wiper	1	RHD
2	02142-06127	SCREW	4	
3	38255-80000	ROD, wiper link	1	
4-1	38102-80031	LINK ASSY, wiper	1	LHD
4-2	38102-70A00	LINK ASSY, wiper	1	RHD
5	38274-78000	.CAP	2	
6	38271-71310	.WASHER	2	
7	38272-71310	.GASKET	2	
8	38278-67011	.NUT	2	
9-1	38330-80040	ARM ASSY, wiper RH	1	LHD
9-2	38310-70A00	ARM ASSY, wiper RH	1	RHD
10-1	38310-80040	ARM ASSY, wiper LH	1	LHD
10-2	38330-70A00	ARM ASSY, wiper LH	1	RHD
11-1	38340-63641	BLADE ASSY, wiper	2	LHD
11-2	38340-70A00	BLADE ASSY, wiper	2	RHD
12-1	38346-80020	.BLADE	2	LHD
12-2	38346-67700	.BLADE	2	RHD
13	38480-80000	NOZZLE, washer	1	
14	38450-83000	TANK ASSY, washer	1	
15	38452-80000	.CAP, washer tank	1	
16	38453-75000	.GROMMET	2	
17	02142-06126	SCREW	2	
18	38490-80010	HOSE ASSY	1	
19	38410-66113	PUMP ASSY	1	
20	38410-86000	PUMP ASSY	1	
21	38837-79500	COVER, pump	1	
22	38493-83000	HOSE (I.:3340)	1	
23	38496-66010	JOINT	2	

SJ413-4 E1

B12B6 -12

FIG.62

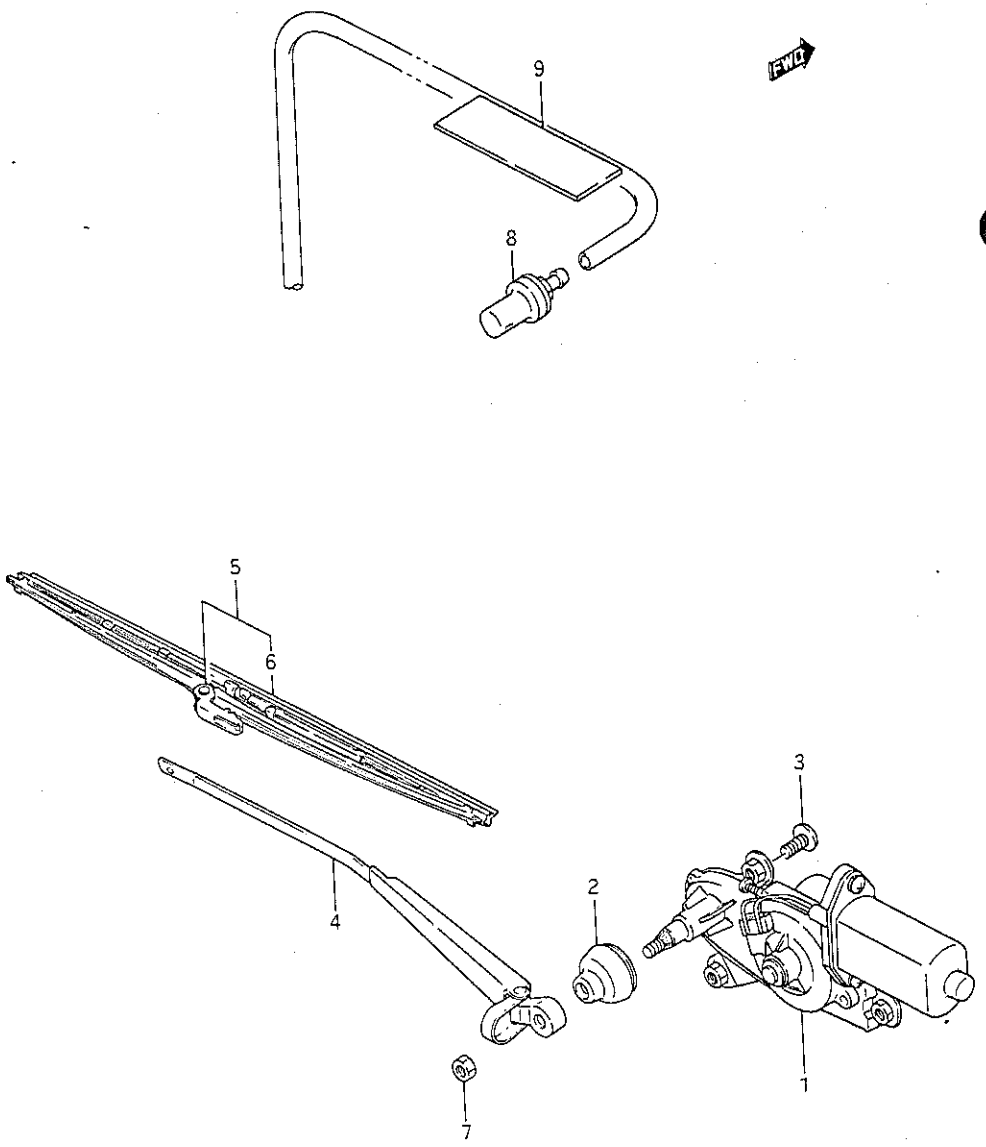

FIG.62 (1-H-10) REAR WIPER

REF.NO.	PART NO.	DESCRIPTION	Q'TY W	REMARKS
1	38811-83402	MOTOR ASSY, wiper	1	
2	38274-83400	GROMMET	1	
3	02142-06126	SCREW	3	
4	38821-83400	ARM ASSY, rear wiper	1	
5	38340-83400	BLADE ASSY, rear wiper	1	
6	38346-83400	.BLADE	1	
7	08310-11066	NUT	1	
8	38480-80000	NOZZLE ASSY, rear washer	1	
9	36930-82000	COVER, washer hose	2	

FIG.63

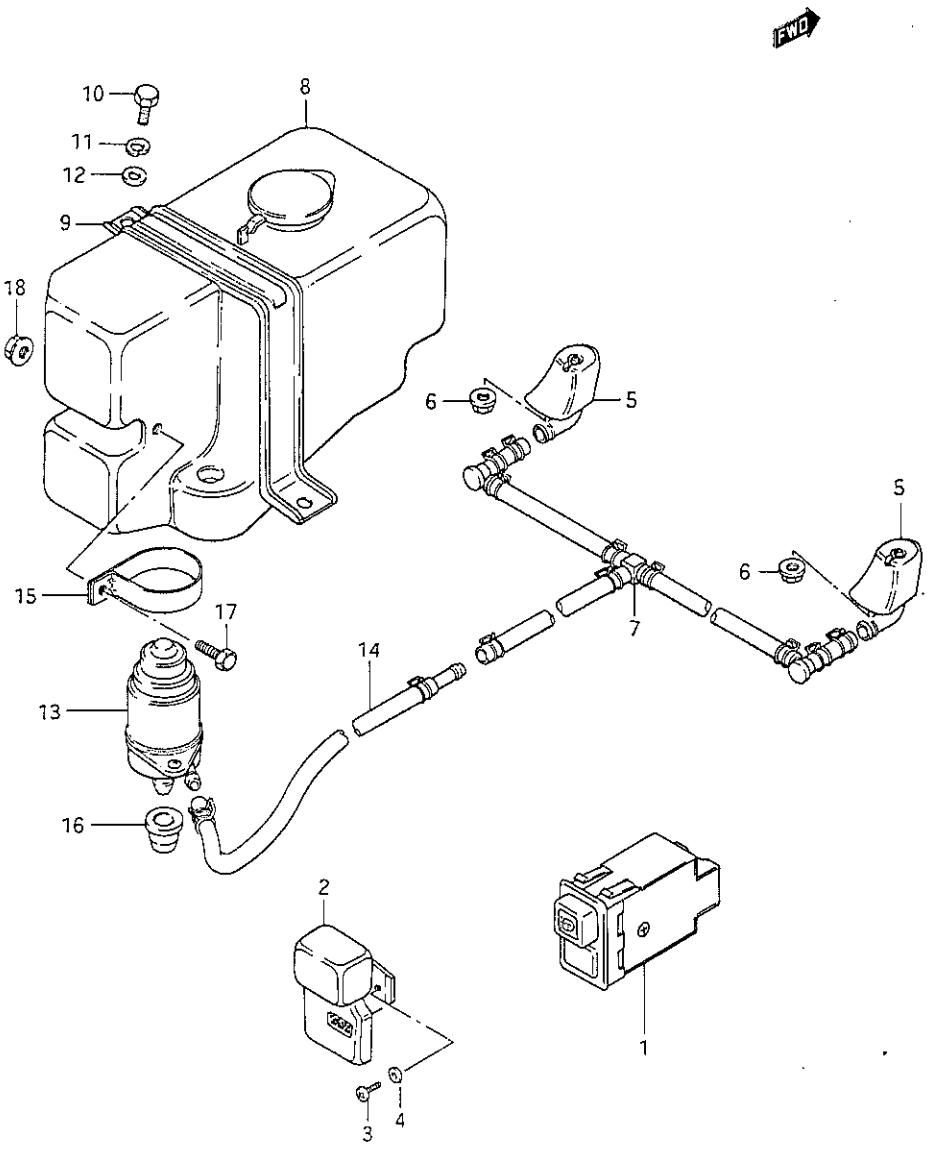

FIG.63 (1-H-11) HEADLAMP WASHER (E15,E16,E17)

REF.NO.	PART NO.	DESCRIPTION	Q'TY Q/W	Q'TY V	REMARKS
1	37930-83000	SWITCH ASSY, washer	1	1	
2	38630-80000	CONTROLLER ASSY, washer	1	1	
3	03212-05169	SCREW	1	1	
4	08322-21057	WASHER	1	1	
5	39110-80000	NOZZLE ASSY, washer	2	2	
6	08316-16066	NUT	2	2	
7	39120-80000	HOSE ASSY, washer	1	1	
8	39131-80000	TANK, headlamp washer	1	1	
9	39137-80001	BRACKET, tank	1	1	
10	01107-06166	BOLT	2	2	
11	08321-21066	LOCK WASHER	2	2	
12	09160-06019	WASHER (6.5x16x1.2)	2	2	
13	39141-85000	MOTOR ASSY	1	1	
14	39135-80000	HOSE ASSY	1	1	
15	39142-80000	BRACKET, motor	1	1	
16	39143-80000	PACKING	1	1	
17	01107-06205	BOLT	1	1	
18	08316-16064	NUT	1	1	

SJ413-4 E1

FIG.64

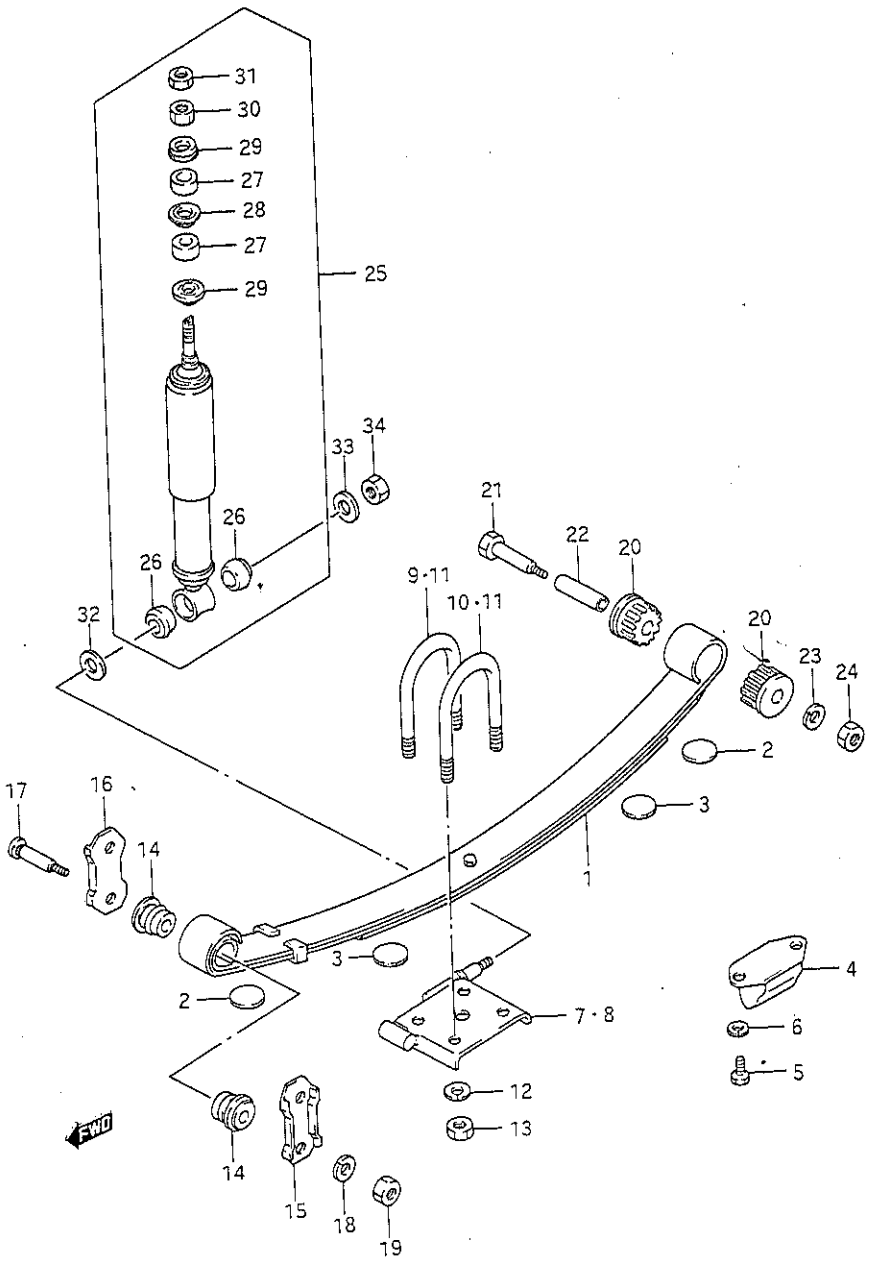

FIG.64 (1-I- 2) FRONT SUSPENSION

REF.NO.	PART NO.	DESCRIPTION	Q'TY Q/W	Q'TY V	REMARKS
1	41110-70A00	SPRING ASSY, front	2	2	
2	41117-70A00	.SILENCER	4	4	
3	41118-70A00	.SILENCER	4	4	
4	42110-80010	BUMPER, spring	2	2	
5	01107-08163	BOLT	4	4	
6	08321-21083	LOCK WASHER	4	4	
7	41230-70A00	SEAT, spring RH	1	1	
8	41240-70A00	SEAT, spring LH	1	1	
9	41411-83010	U BOLT, outer RH	1	1	
10	41411-83020	U BOLT, inner RH	1	1	
11	41411-83000	U BOLT, LH	2	2	
12	08321-31123	LOCK WASHER	8	8	
13	08310-11123	NUT	8	8	
14	09305-13002	BUSH, shackle	8	8	
15	41461-77300	PLATE, shackle inner	2	2	
16	41462-77300	PLATE, shackle outer	2	2	
17	41463-82000	PIN, shackle	4	4	
18	08321-31103	LOCK WASHER	4	4	
19	08310-12103	NUT	4	4	
20	41331-62020	BUSH, spring	4	4	
21	09100-12025	BOLT (12x92)	2	2	
22	09180-12035	SPACER (12x16x64.5)	2	2	
23	08321-31123	LOCK WASHER	2	2	
24	08310-11123	NUT	2	2	
25	41600-70A00	ABSORBER, front shock	2	2	
26	09320-16006	.BUSH, lower	4	4	
27	09320-10024	.BUSH, upper	4	4	
28	09169-15002	.WASHER	2	2	
29	09165-10002	.RETAINER	4	4	
30	08310-12103	.NUT	2	2	
31	08310-22103	.NUT	2	2	
32	08322-21163	WASHER, No.2	2	2	
33	09160-12073	WASHER, No.1 (12.5x32x2.3)	2	2	
34	08310-11123	NUT	2	2	

SJ413-4 E1

FIG.65

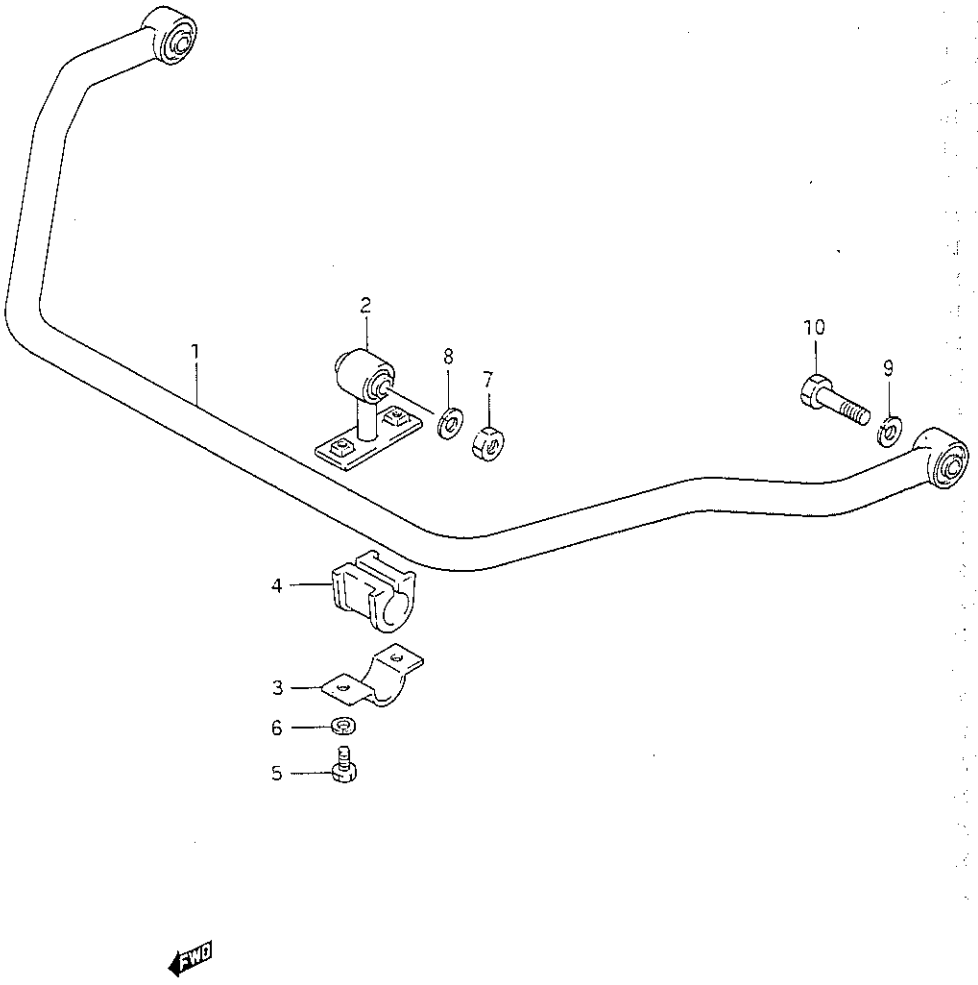

FIG.65 (1-I- 3) FRONT STABILIZER

REF.NO.	PART NO.	DESCRIPTION	Q'TY Q/W	Q'TY V	REMARKS
1	42300-70A00	STABILIZER ASSY, front	1	1	
2	42400-83001	ROD ASSY, front stabilizer	2	2	
3	42415-83000	PLATE, stabilizer mount	2	2	
4	42412-70A00	BUSH, stabilizer mount	2	2	
5	01107-08203	BOLT	4	4	
6	08321-21083	LOCK WASHER	4	4	
7	08310-12103	NUT	2	2	
8	08321-31103	LOCK WASHER	2	2	
9	08321-31123	LOCK WASHER	2	2	
10	09100-12041	BOLT, front stabilizer	2	2	

FIG.66

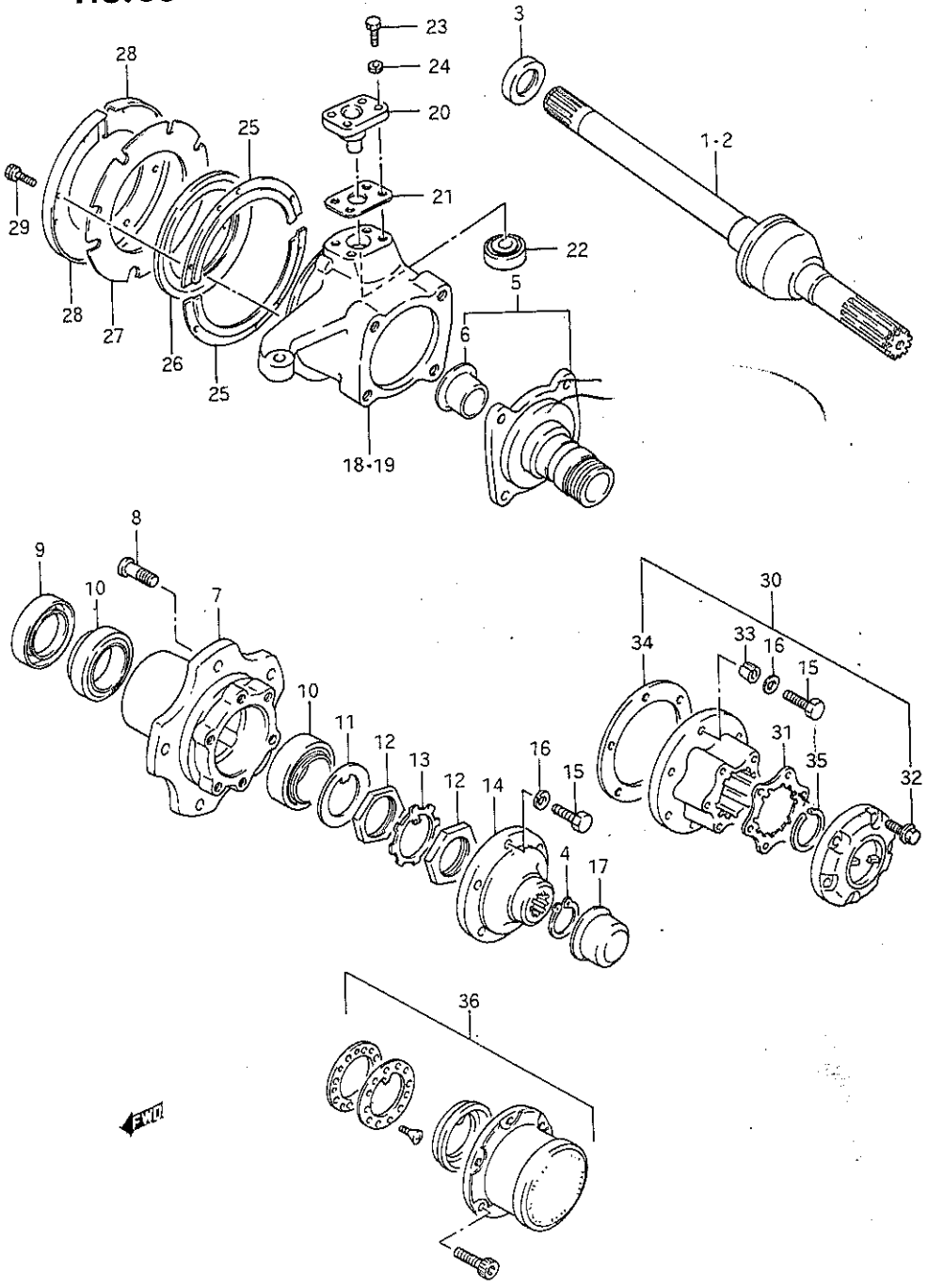

FIG.66 (1-I- 4) FRONT AXLE

REF.NO.	PART NO.	DESCRIPTION	Q'TY Q/W	Q'TY V	REMARKS
1	44101-83300	JOINT ASSY, axle shaft RH	1	1	
2	44102-83300	JOINT ASSY, axle shaft LH	1	1	
3	09283-26016	OIL SEAL	2	2	
4	08331-31266	CIRCLIP	2	2	
5	43440-80003	SPINDLE, front wheel	2	2	
6	43445-80012	BUSH	2	2	
7	43421-80001	HUB, front wheel	2	2	
8	09119-12005	BOLT	10	10	
9	09283-50002	OIL SEAL	2	2	
10	09265-41001	BEARING	4	4	
11	43465-80000	WASHER	2	2	
12	43461-80000	NUT	4	4	
13	43466-80000	LOCK WASHER	2	2	
14	43471-80001	FLANGE, axle shaft drive	2	2	
15	01107-08253	BOLT	12	12	
16	08321-31083	LOCK WASHER	12	12	
17	43241-80001	CAP, front axle	2	2	
18	45111-80001	KNUCKLE, steering RH	1	1	
19	45151-80001	KNUCKLE, steering LH	1	1	
20	45610-63001	KING PIN	4	4	
21-1	45621-63000	SHIM, king pin No.1 (T:0.5)	AR	4~8	
21-2	45622-63000	SHIM, king pin No.2 (T:0.1)	AR	0~8	
22	09265-15002	BEARING	4	4	
23	01107-08203	BOLT	16	16	
24	08321-31083	LOCK WASHER	16	16	
25	45623-80000	RETAINER, oil seal	4	4	
26	09285-00002	OIL SEAL	2	2	
27	45624-63001	PAD	2	2	
28	45625-63001	COVER, oil seal	4	4	
29	45626-83000	BOLT	16	16	

SJ413-4 E1

FIG.66

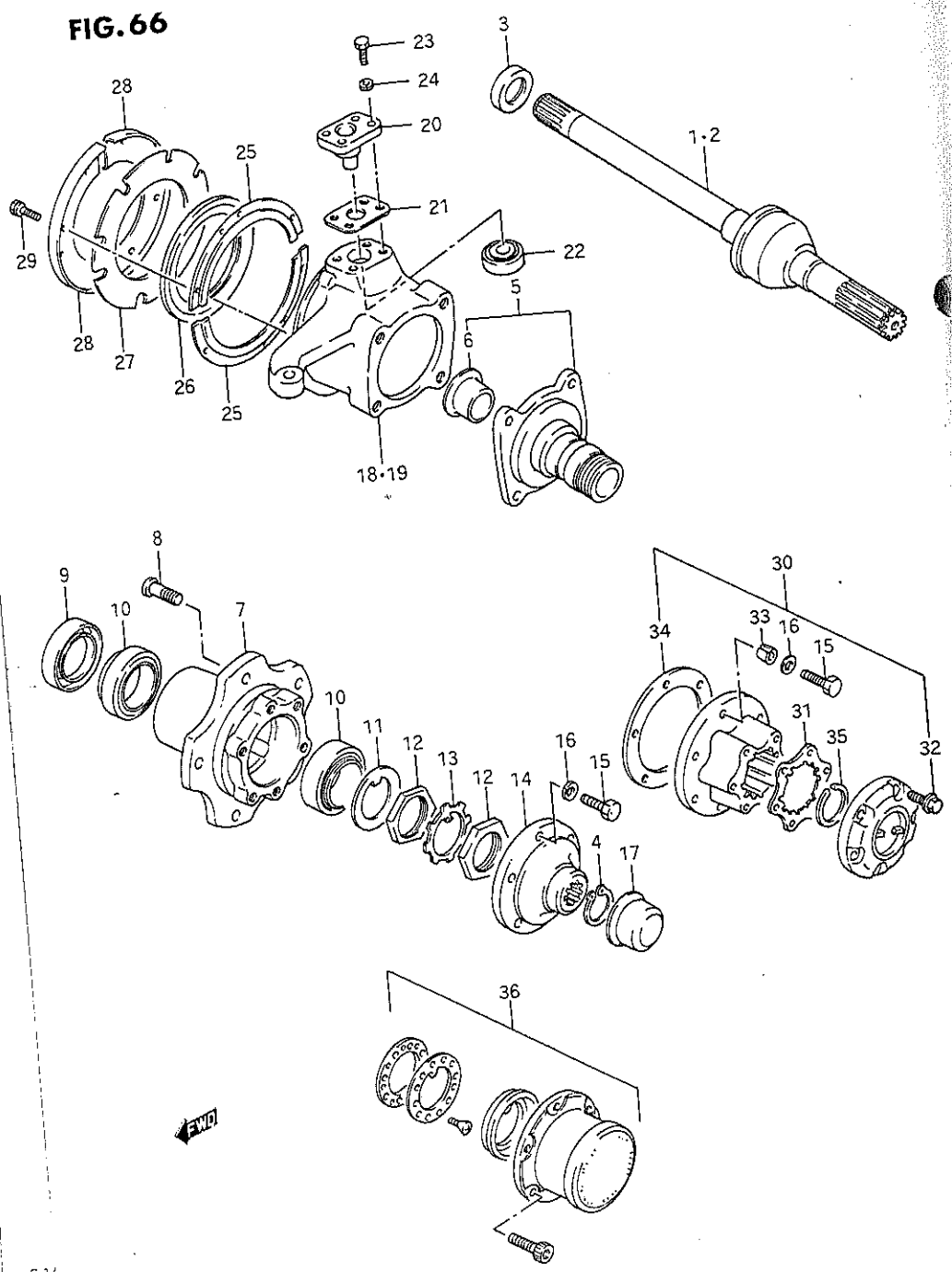

FIG.66 (1-I- 5) FRONT AXLE

REF.NO.	PART NO.	DESCRIPTION	Q'TY Q/W	Q'TY V	REMARKS
30	43801-80010	HUB KIT, locking	2	2	
31	43813-80000	.GASKET, locking hub cover	2	2	
32	43814-80010	.BOLT, locking hub cover	12	12	
33	43841-80001	.CONE WASHER, locking hub	12	12	
34	43842-80001	.PACKING, locking hub	2	2	
35	09380-26003	CIRCLIP, axle shaft	2	2	
36	43801-83000	HUB KIT, front wheel	1	1	OPT

FIG.67

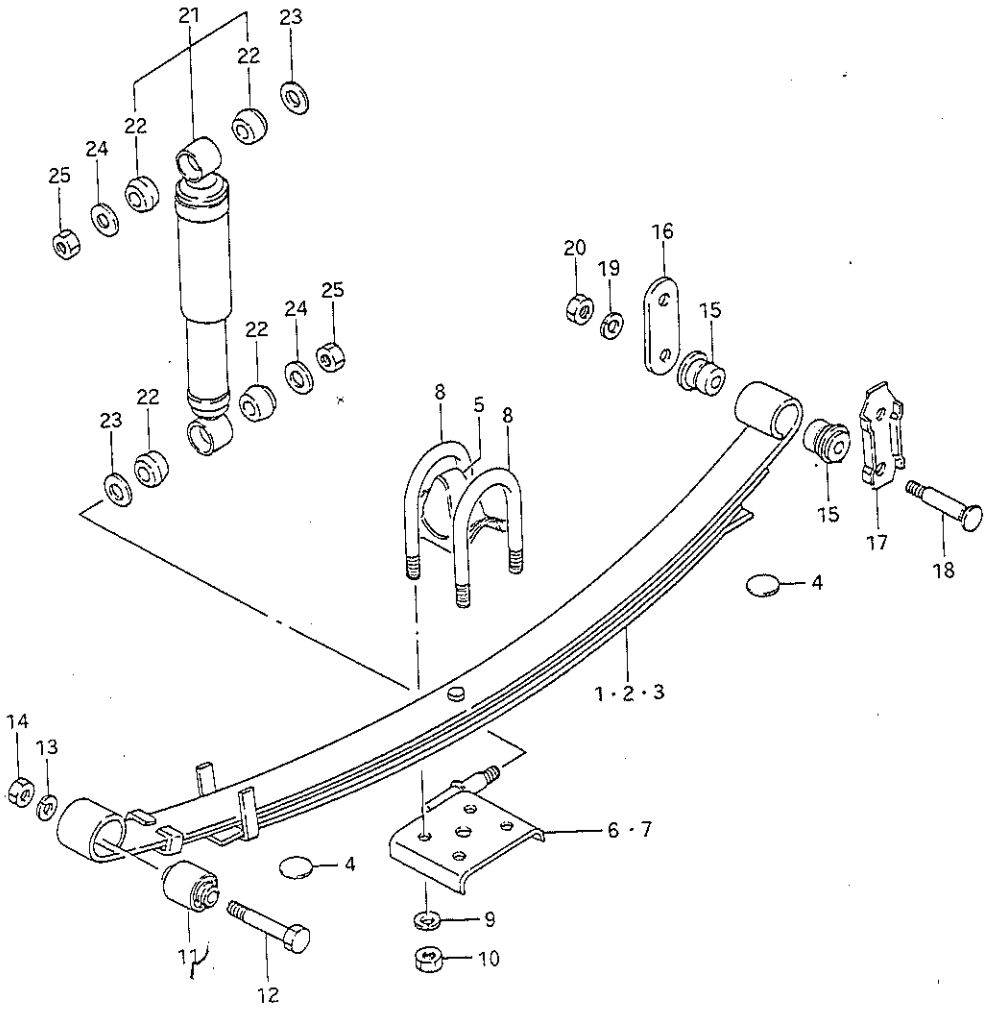

FIG.67 (1-I- 6) REAR SUSPENSION

REF.NO.	PART NO.	DESCRIPTION	Q'TY Q/W	Q'TY V	REMARKS
1	41310-70A10	SPRING ASSY, rear	2	2	LHD
2	41310-70A10	SPRING ASSY, rear RH	1	1	RHD
3	41310-70A20	SPRING ASSY, rear LH	1	1	RHD
4	41118-70A00	.SILENCER	8	8	
5	42150-83000	BUMPER, spring	2	2	
6	41430-83000	SEAT, spring RH	1	1	
7	41440-83000	SEAT, spring LH	1	1	
8	41411-83000	U BOLT	4	4	
9	08321-31123	LOCK WASHER	8	8	
10	08310-11123	NUT	8	8	
11	09319-12023	BUSH, spring	2	2	
12	09100-12025	BOLT (12x92)	2	2	
13	08321-31123	LOCK WASHER	2	2	
14	08310-11123	NUT	2	2	
15	09305-13002	BUSH, shackle	8	8	
16	41461-83300	PLATE, shackle inner	2	2	
17	41462-77300	PLATE, shackle outer	2	2	
18	41463-82000	PIN, shackle	4	4	
19	08321-31103	LOCK WASHER	4	4	
20	08310-12103	NUT	4	4	
21	41700-70A00	ABSORBER, rear shock	2	2	
22	09320-16006	.BUSH	8	8	
23	08322-21163	WASHER	4	4	
24	09160-12073	WASHER (12.5x32x2.3)	4	4	
25	08310-11123	NUT	4	4	

SJ413-4 E1

FIG. 68

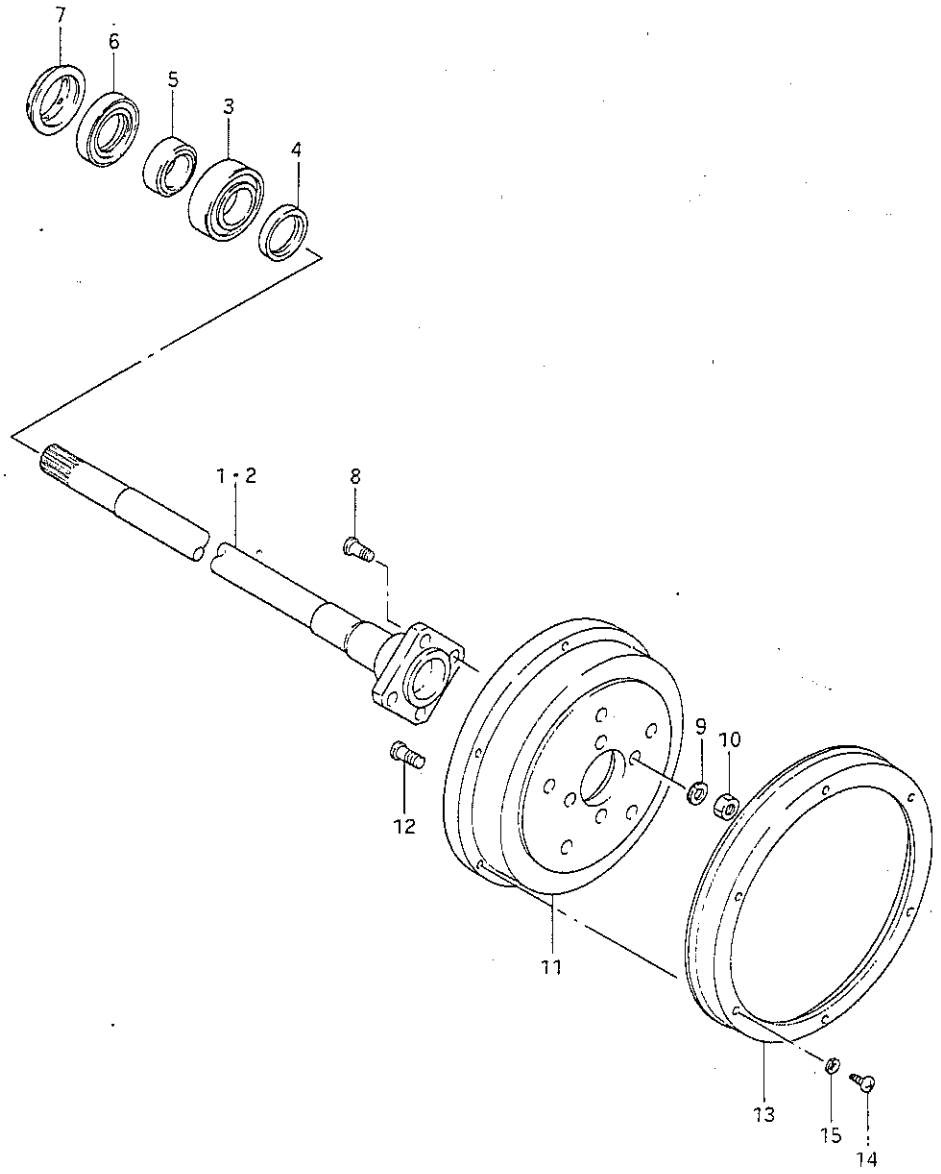

FWD

SJ413-4 E1

FIG.68 (1-I- 7) REAR AXLE

REF.NO.	PART NO.	DESCRIPTION	Q'TY Q/W	Q'TY V	REMARKS
1	44210-83300	SHAFT, rear axle RH	1	1	
2	44220-83300	SHAFT, rear axle LH	1	1	
3	09262-35036	BEARING	2	2	
4	44131-73001	SPACER, rear shaft	2	2	
5	43485-73000	RING, bearing retainer	2	2	
6	09283-48007	OIL SEAL	2	2	
7	43588-73000	PROTECTOR, oil seal	2	2	
8	09119-12003	BOLT, rear hub	8	8	
9	08321-31126	LOCK WASHER	8	8	
10	08310-11126	NUT	8	8	
11	43500-83810	DRUM SET, rear brake	2	2	
12	09119-12007	BOLT	10	10	
13	43521-83003	COVER, brake drum dust	2	2	
14	02112-06103	SCREW	12	12	
15	08321-21063	LOCK WASHER	12	12	

SJ413-4 E1

FIG.69

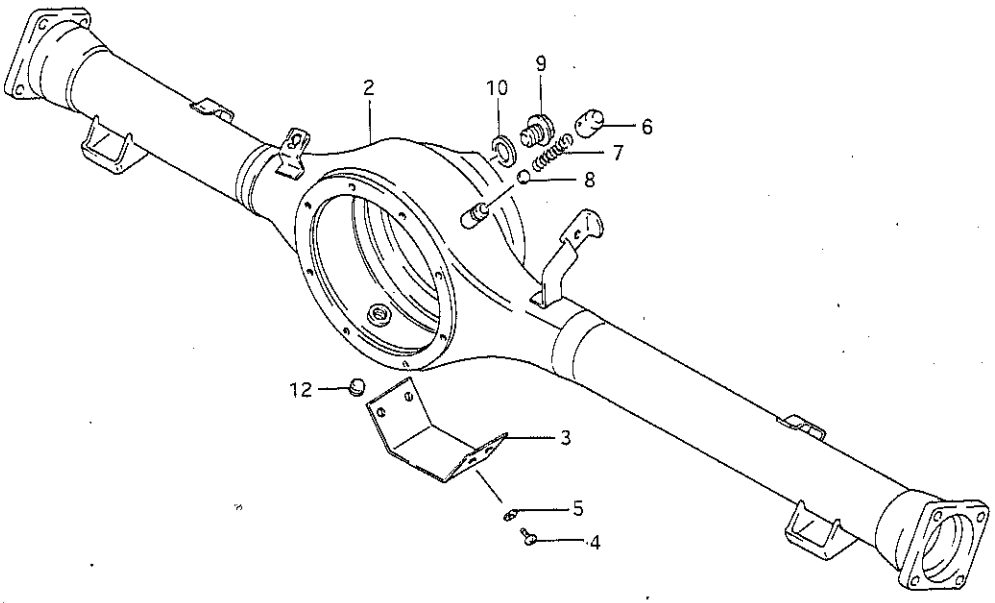

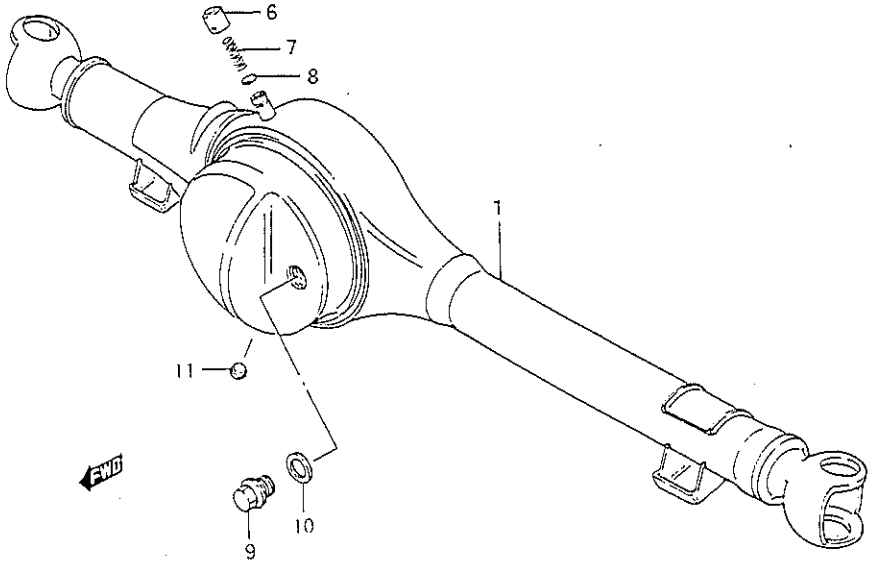

SJ413-4 E1

FIG.69 (1-I- 8) AXLE HOUSING

REF.NO.	PART NO.	DESCRIPTION	Q'TY Q/W	Q'TY V	REMARKS
1	46480-83003	HOUSING, front axle	1	1	
2-1	46510-70A00	HOUSING, rear axle	1	1	
2-2	46510-70A10	HOUSING, rear axle	1	1	E34
3	46551-83070	PROTECTOR, rear axle	1	1	E34
4	02112-05103	SCREW	4	4	E34
5	08321-21053	LOCK WASHER	4	4	E34
6	46541-52002	CAP, breather	2	2	
7	09440-12004	SPRING	2	2	
8	46542-52000	VALVE	2	2	
9	09247-20001	PLUG, oil level	2	2	
10	09168-20001	GASKET	2	2	
11	09246-16009	PLUG, oil drain front	2	2	
12	09246-16010	PLUG, oil drain rear	2	2	

SJ413-4 E1

FIG.70

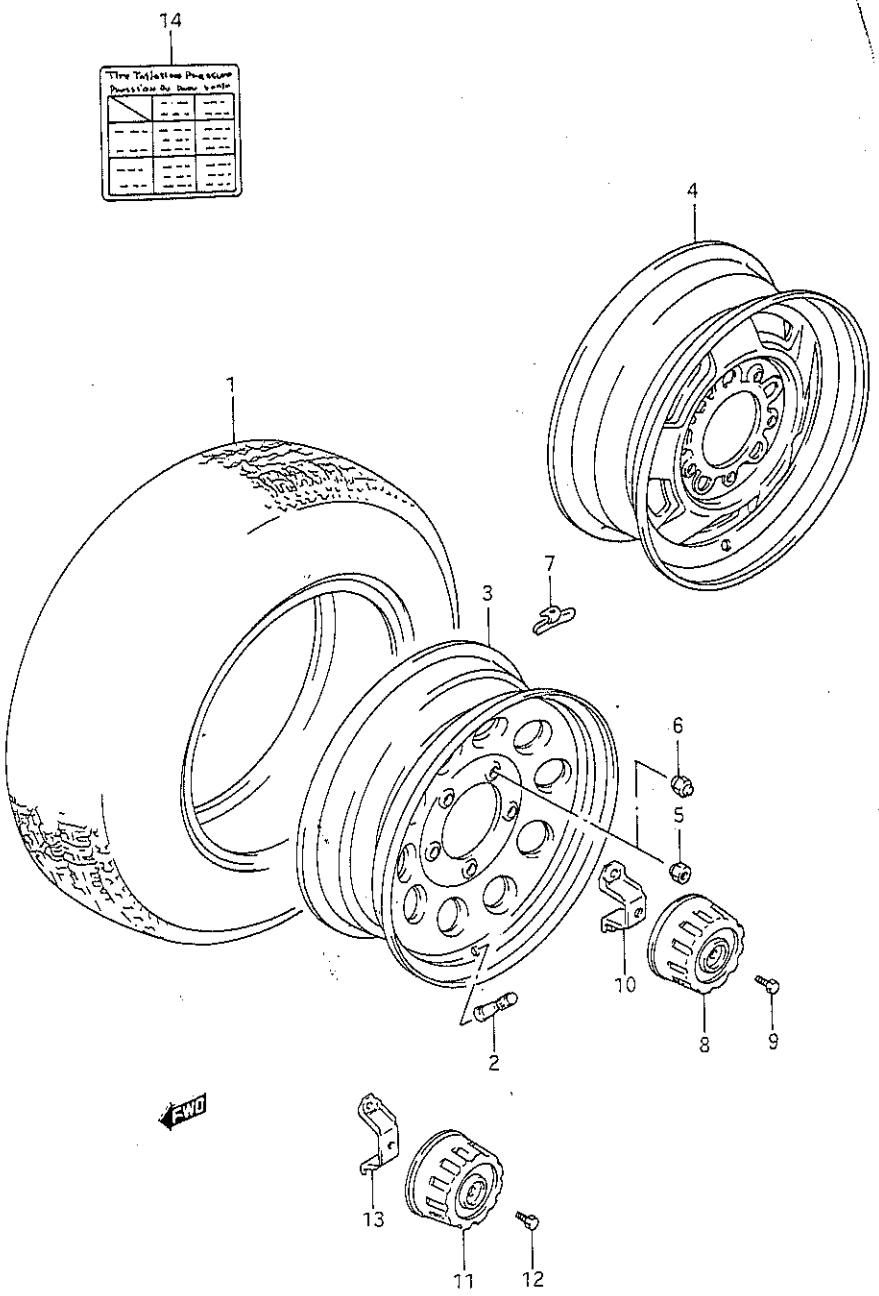

FIG.70 (1-I- 9) TIRE AND WHEEL

REF.NO.	PART NO.	DESCRIPTION	Q'TY Q/W	Q'TY V	REMARKS
1-1	43110-70A00	TIRE (205/70R15) BS	5	5	
1-2	43110-70A10	TIRE (205/70R15) DUNLOP	5	5	E2,E18,E68
1-3	43110-83310	TIRE (P205/70R15) BS	5	5	E27
1-4	43110-83320	TIRE (P205/70R15) BS	5	5	E27 White Letter
2-1	43130-78030	VALVE, tire (TR413) BS	5	5	
2-2	43130-75150	VALVE, tire (TR413) DUNLOP	5	5	E2,E18,E68
3-1	43210-70A00-019	WHEEL (5 1/2-JJx15)	5	5	Black
3-2	43210-70A00-26U	WHEEL (5 1/2-JJx15)	5	5	White
3-3	43210-70A10	WHEEL (5 1/2-JJx15)	5	5	Chromium Plated
4-1	43210-80000-019	WHEEL (5 1/2-JJx15)	5	5	Black
4-2	43210-80000-26U	WHEEL (5 1/2-JJx15)	5	5	White
5	09140-12026	NUT	20	20	
6	09159-12024	NUT	20	20	
7-1	43231-83000	WEIGHT, wheel balance (30g)	AR	0~8	
7-2	43232-83000	WEIGHT, wheel balance (40g)	AR	0~8	
7-3	43233-83000	WEIGHT, wheel balance (50g)	AR	0~8	
7-4	43234-83000	WEIGHT, wheel balance (60g)	AR	0~8	
7-5	43235-83000	WEIGHT, wheel balance (70g)	AR	0~8	
7-6	43236-83000	WEIGHT, wheel balance (80g)	AR	0~8	
8	43252-80000	CENTER CAP, wheel rear	2	2	
9	09100-08253	BOLT (8x9)	2	2	
10	43271-80000	HOLDER, center cap rear	2	2	
11	43252-80000	CENTER CAP, wheel front	2	2	
12	09100-08253	BOLT (8x9)	2	2	
13	43261-80000	HOLDER, center cap front	2	2	
14	79161-83300	PLACARD, tire information	1	1	

SJ413-4 E1

FIG.71

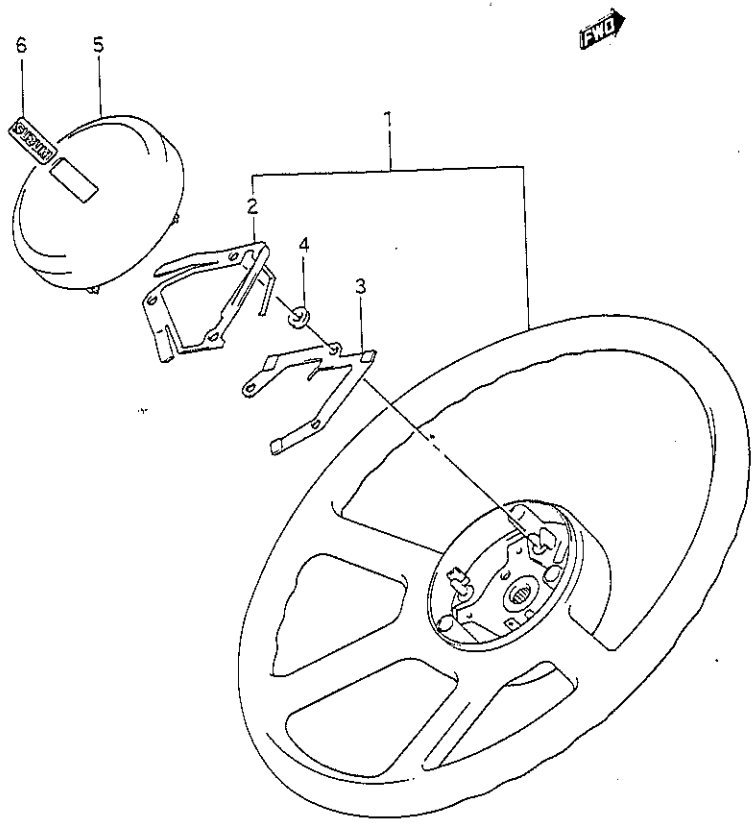

FIG.71 (1-I-10) STEERING WHEEL

REF.NO.	PART NO.	DESCRIPTION	Q'TY Q/W	Q'TY V	REMARKS
1-1	48110-70A00-5CW	WHEEL, steering (Brown)	1	1	
1-1	48110-70A00-5ES	WHEEL, steering (Black)	1	1	
2	48130-70A00	.PLATE, contact	1	1	
3	48133-70A00	.SEAT, contact	1	1	
4	48128-80030	.COLLAR	3	3	
5-1	48121-70A00-5CW	BUTTON, horn (Brown)	1	1	
5-2	48121-70A00-5ES	BUTTON, horn (Black)	1	1	
6	48131-80030	.EMBLEM	1	1	

SJ413-4 E1

FIG.72

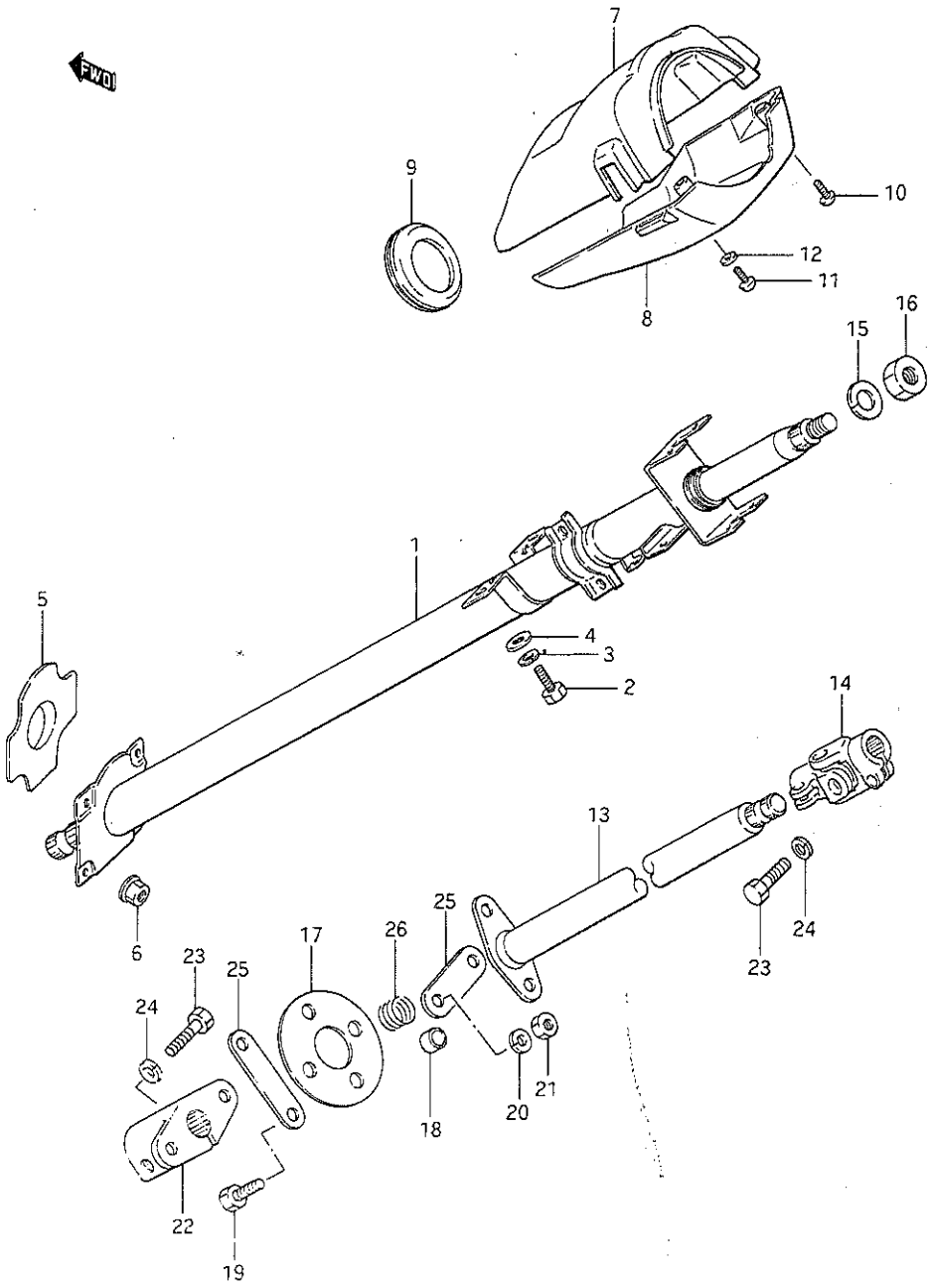

FIG.72 (1-I-11) STEERING SHAFT

REF.NO.	PART NO.	DESCRIPTION	Q'TY Q/W	Q'TY V	REMARKS
1	48200-83010	COLUMN, steering	1	1	
2	01107-08206	BOLT	2	2	
3	08321-21086	LOCK WASHER	2	2	
4	08322-11086	WASHER	2	2	
5	48491-80000	SEAL RUBBER	1	1	
6	08316-16086	NUT	4	4	
7-1	48411-80351-5CW	COVER, steering upper (Brown)	1	1	LHD
7-2	48411-80351-5ES	COVER, steering upper (Black)	1	1	LHD
7-3	48411-80251-5CW	COVER, steering upper (Brown)	1	1	RHD
7-4	48411-80251-5ES	COVER, steering upper (Black)	1	1	RHD
8-1	48421-80300-5CW	COVER, steering lower (Brown)	1	1	LHD
8-2	48421-80300-5ES	COVER, steering lower (Black)	1	1	LHD
8-3	48421-80200-5CW	COVER, steering lower (Brown)	1	1	RHD
8-4	48421-80200-5ES	COVER, steering lower (Black)	1	1	RHD
9	48419-75000	SEAL, cover	1	1	
10	03211-05166	SCREW	5	5	
11	02112-05126	SCREW, lower	3	3	
12	09160-05034	WASHER (5.3x10x1.0)	3	3	
13	48220-80100	SHAFT, steering lower	1	1	
14	48230-80120	JOINT, steering	1	1	
15	08321-31126	LOCK WASHER	1	1	
16	09140-12022	NUT	1	1	
17	48251-52000	JOINT, rubber	1	1	
18	09180-08007	SPACER (8.1x10.5x9)	4	4	
19	01107-08256	BOLT	4	4	
20	08321-31086	LOCK WASHER	4	4	
21	08310-12086	NUT	4	4	
22	48270-80010	FLANGE, rubber joint	1	1	
23	09111-08066	BOLT (8x30)	3	3	
24	08321-31083	LOCK WASHER	3	3	
25	48262-58001	PLATE, rubber joint	2	2	
26	48281-85000	SPRING, horn earth	1	1	

Note : E2,E6,E15,E16,E17,E18,E19,E22,E25,E34,E39,E43,E54,E68
see next fig.

FIG.73

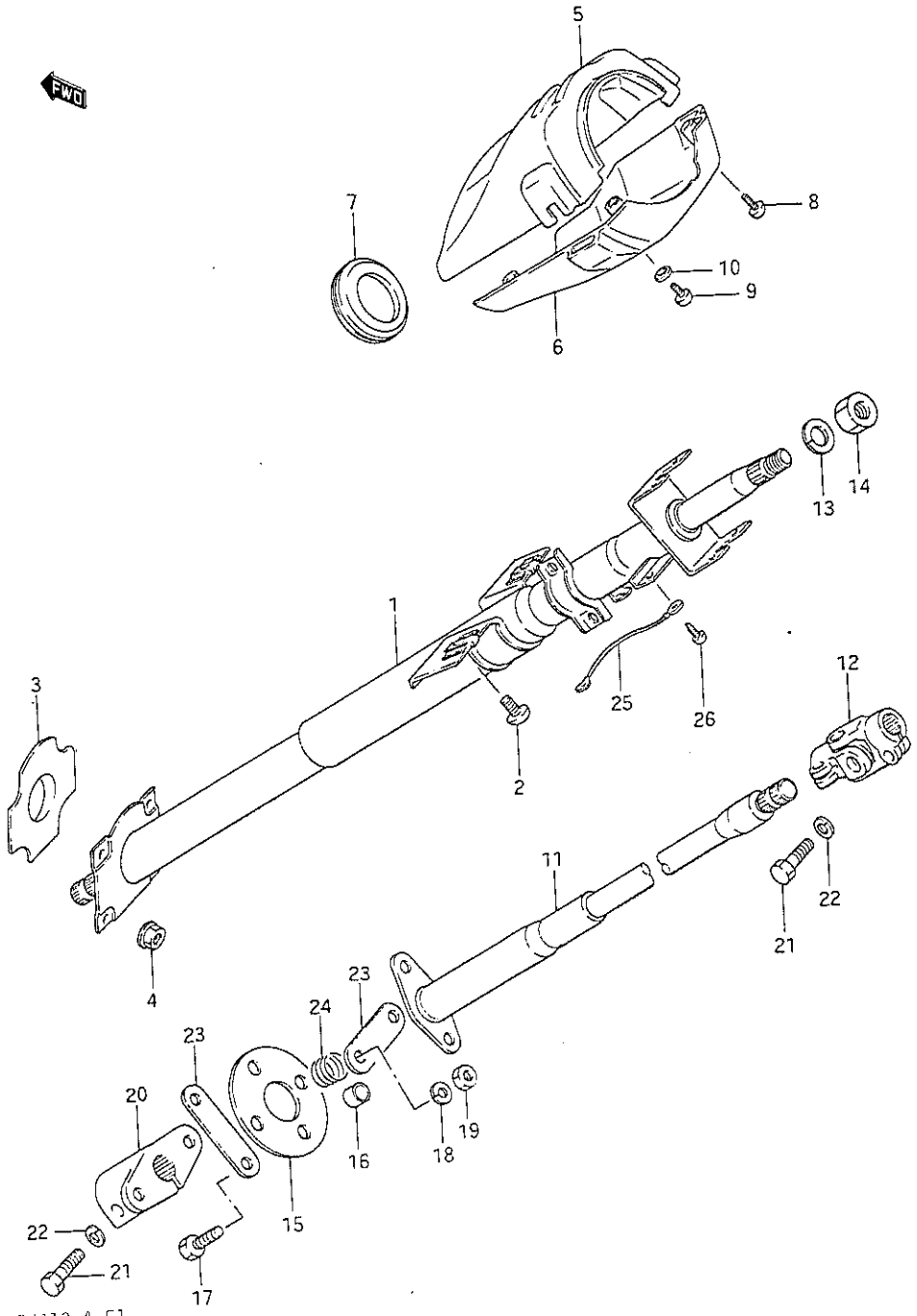

SJ413-4 E1

FIG.73 (1-1-12) STEERING SHAFT (SEE NOTE)

REF.NO.	PART NO.	DESCRIPTION	Q'TY Q/W	Q'TY V	REMARKS
1-1	48200-80210	COLUMN ASSY, steering	1	1	KOYO
1-2	48200-80220	COLUMN ASSY, steering	1	1	NSK
2	09125-08005	SCREW	2	2	
3	48491-80000	SEAL RUBBER	1	1	
4	08316-16086	NUT	4	4	
5-1	48411-80351-5CW	COVER, steering upper (Brown)	1	1	LHD
5-2	48411-80351-5ES	COVER, steering upper (Black)	1	1	LHD
5-3	48411-80251-5CW	COVER, steering upper (Brown)	1	1	RHD
5-4	48411-80251-5ES	COVER, steering upper (Black)	1	1	RHD
6-1	48421-80300-5CW	COVER, steering lower (Brown)	1	1	LHD
6-2	48421-80300-5ES	COVER, steering lower (Black)	1	1	LHD
6-3	48421-80200-5CW	COVER, steering lower (Brown)	1	1	RHD
6-4	48421-80200-5ES	COVER, steering lower (Black)	1	1	RHD
7	48419-75000	SEAL, cover	1	1	
8	03211-05166	SCREW	5	5	
9	02112-05126	SCREW, lower	3	3	
10	09160-05034	WASHER (5.3x10x1.0)	3	3	
11-1	48220-80120	SHAFT, steering lower	1	1	KOYO
11-2	48220-80130	SHAFT, steering lower	1	1	NSK
12-1	48230-80120	JOINT, steering	1	1	KOYO
12-2	48230-80110	JOINT, steering	1	1	NSK
13	08321-31126	LOCK WASHER	1	1	
14-1	09140-12022	NUT	1	1	
14-2	09140-12024	NUT	1	1	E22,E39
15	48251-52000	JOINT, rubber	1	1	
16	09180-08007	SPACER (8.1x10.5x9)	4	4	
17-1	01107-08256	BOLT	4	4	
17-2	09100-08184	BOLT (8x25)	4	4	E22,E39
18	08321-31086	LOCK WASHER	4	4	
19	08310-12086	NUT	4	4	
20	48270-80010	FLANGE, rubber joint	1	1	
21-1	09111-08066	BOLT (8x30)	3	3	
21-2	09100-08218	BOLT (8x30)	3	3	E22,E39
22	08321-31086	LOCK WASHER	3	3	

Note : E2,E6,E15,E16,E17,E18,E19,E22,E25,E34,E39,E43,E54,E68

SJ413-4 E1

FIG.73

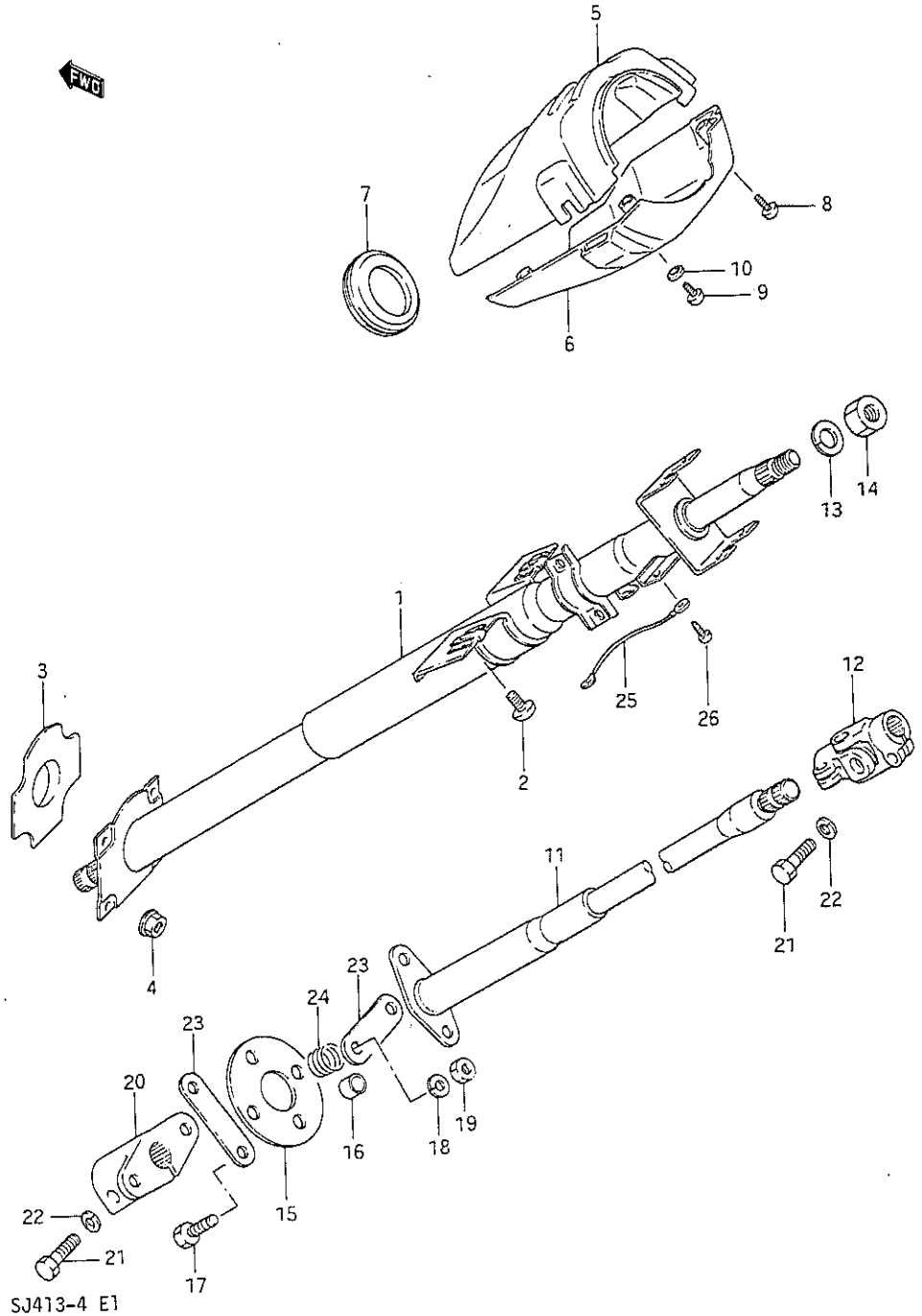

SJ413-4 E1

FIG.73 (1-I-13) STEERING SHAFT (SEE NOTE)

REF.NO.	PART NO.	DESCRIPTION	Q'TY Q/W	Q'TY V	REMARKS
23	48262-58001	PLATE, rubber joint	2	2	
24	48281-85000	SPRING, horn earth	1	1	
25	48528-80000	WIRE, horn earth	1	1	
26	03141-04086	SCREW	1	1	

Note : E2,E6,E15,E16,E17,E18,E19,E22,E25,E34,E39,E43,E54,E68

SJ413-4 E1

FIG.74

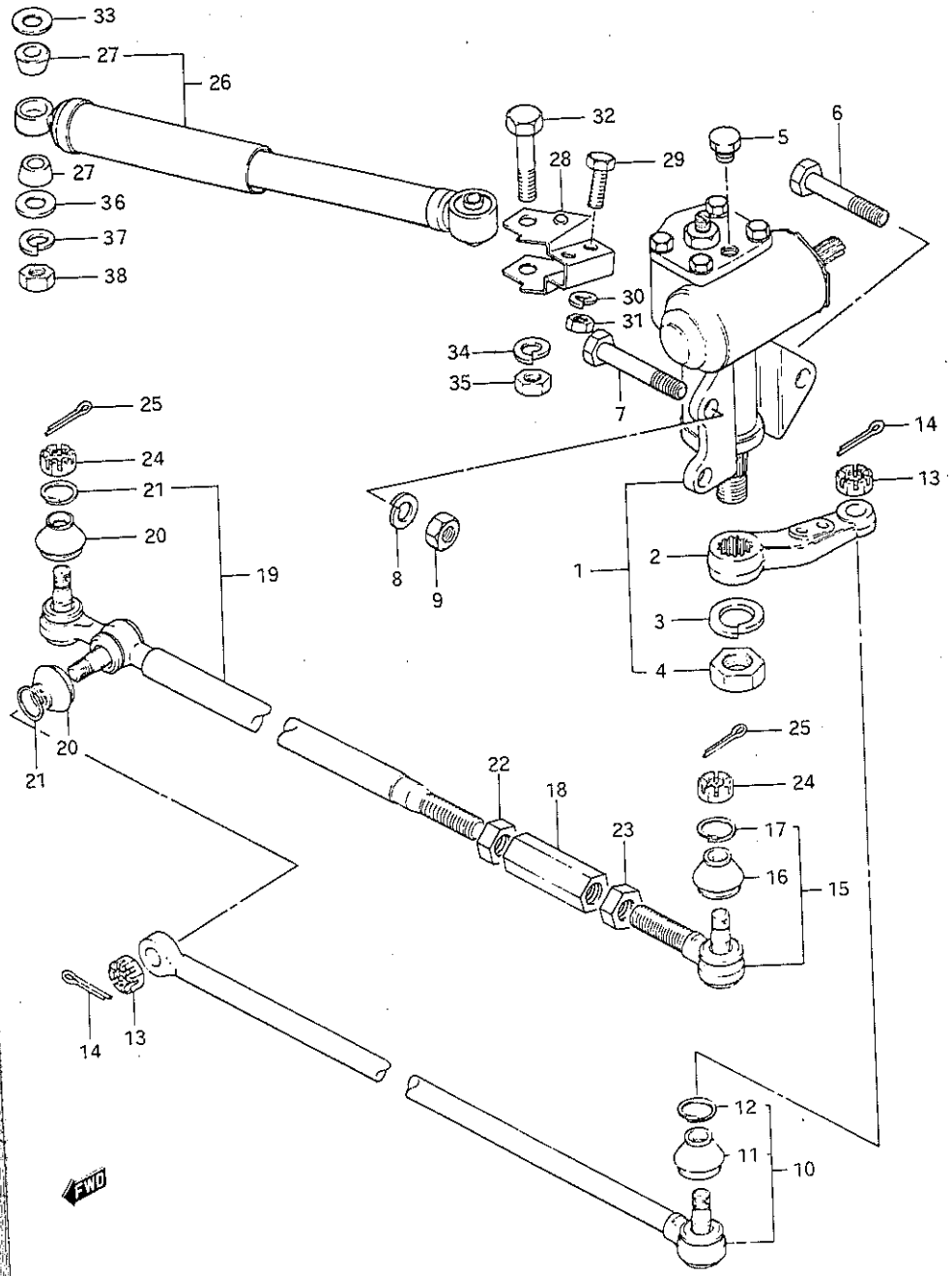

FIG.74 (1-I-14) STEERING LINK (LHD)

REF.NO.	PART NO.	DESCRIPTION	Q'TY Q/W	Q'TY V	REMARKS
1	48600-80090	BOX ASSY, steering gear	1	1	
2	48671-80060	.ARM, pitman	1	1	
3	08321-21208	.LOCK WASHER	1	1	
4	48674-63240	.NUT	1	1	
5	48633-67011	.PLUG, breather	1	1	
6	01107-12703	BOLT, No.1	1	1	
7	01107-12903	BOLT, No.2	2	2	
8	08321-31123	LOCK WASHER	3	3	
9-1	08310-11123	NUT	3	3	
9-2	08319-21123	NUT	3	3	E22,E39
10	48900-70A60	ROD ASSY, steering drug	1	1	
11	48806-80000	.DUST SEAL	1	1	
12	09401-27401	.CLIP	1	1	
13	08314-41123	NUT	2	2	
14	04111-30306	COTTER PIN	2	2	
15	48810-60A00	END, tie rod LH	1	1	
16	48806-80000	.DUST SEAL	1	1	
17	09401-27401	.CLIP	1	1	
18	48836-70A00	CONNECTOR, tie rod end	1	1	
19	48870-70A61	TIE ROD, steering	1	1	
20	48806-80000	.DUST SEAL	2	2	
21	09401-27401	.CLIP	2	2	
22	48837-70A00	NUT, RH	1	1	LH threads
23	48838-70A00	NUT, LH	1	1	RH threads
24	08314-41123	NUT	2	2	
25	04111-30306	COTTER PIN	2	2	

SJ413-4 E1

FIG.74

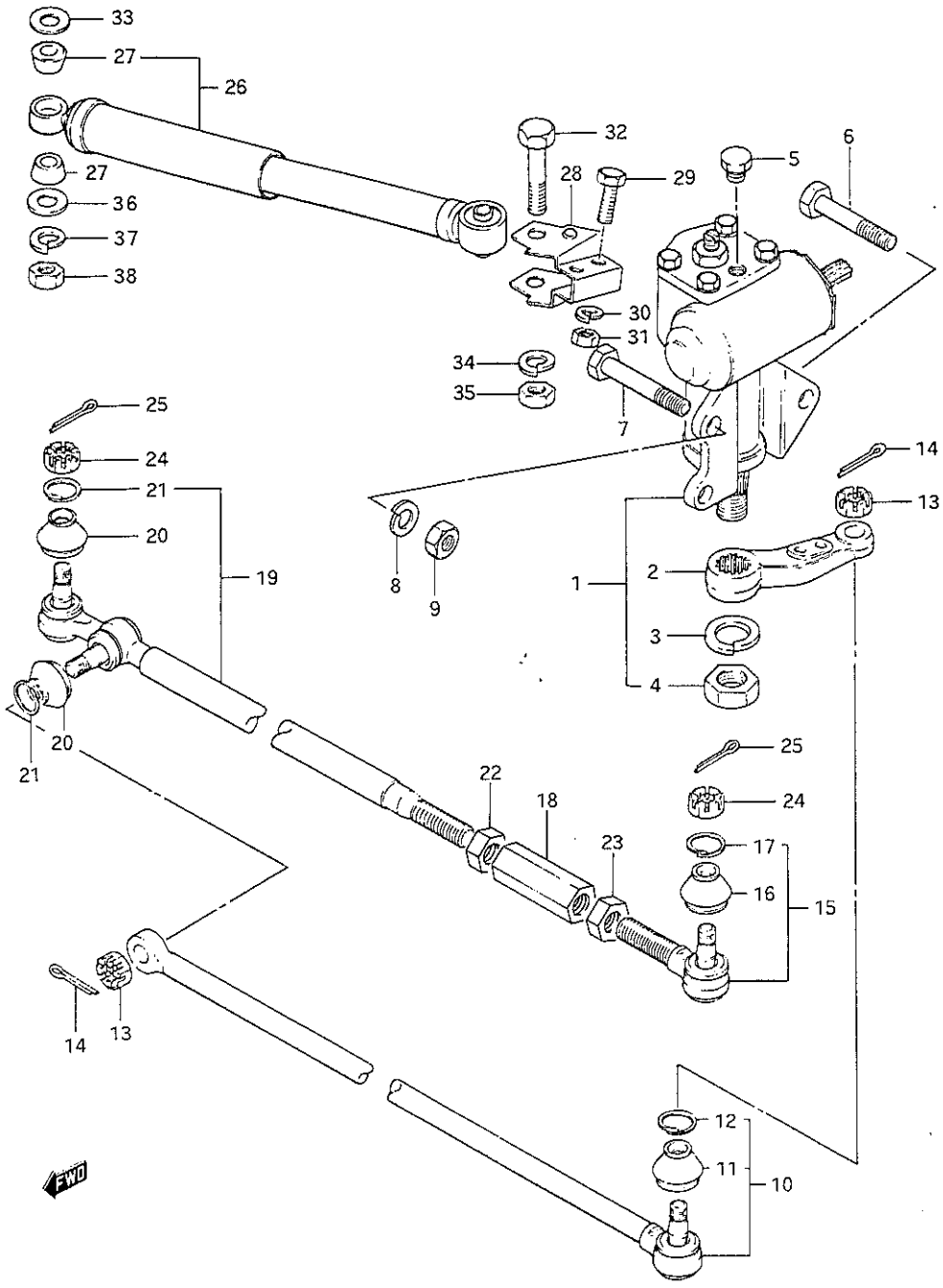

FIG.74 (1-I-15) STEERING LINK (LHD)

REF.NO.	PART NO.	DESCRIPTION	Q'TY Q/W	Q'TY V	REMARKS
26	48730-80012	DAMPER ASSY, steering	1	1	
27	41681-58010	.BUSH	2	2	
28	48741-80060	STAY, steering damper	1	1	
29	01107-08303	BOLT	2	2	
30	08321-31083	LOCK WASHER	2	2	
31	08310-11083	NUT	2	2	
32	01104-12553	BOLT	1	1	
33	08322-21123	WASHER	1	1	
34	08321-31123	LOCK WASHER	1	1	
35	08310-11123	NUT	1	1	
36	09160-10078	WASHER (10.2x27x1.6)	1	1	
37	08321-31103	LOCK WASHER	1	1	
38	08310-12103	NUT	1	1	

SJ413-4 E1

FIG.75

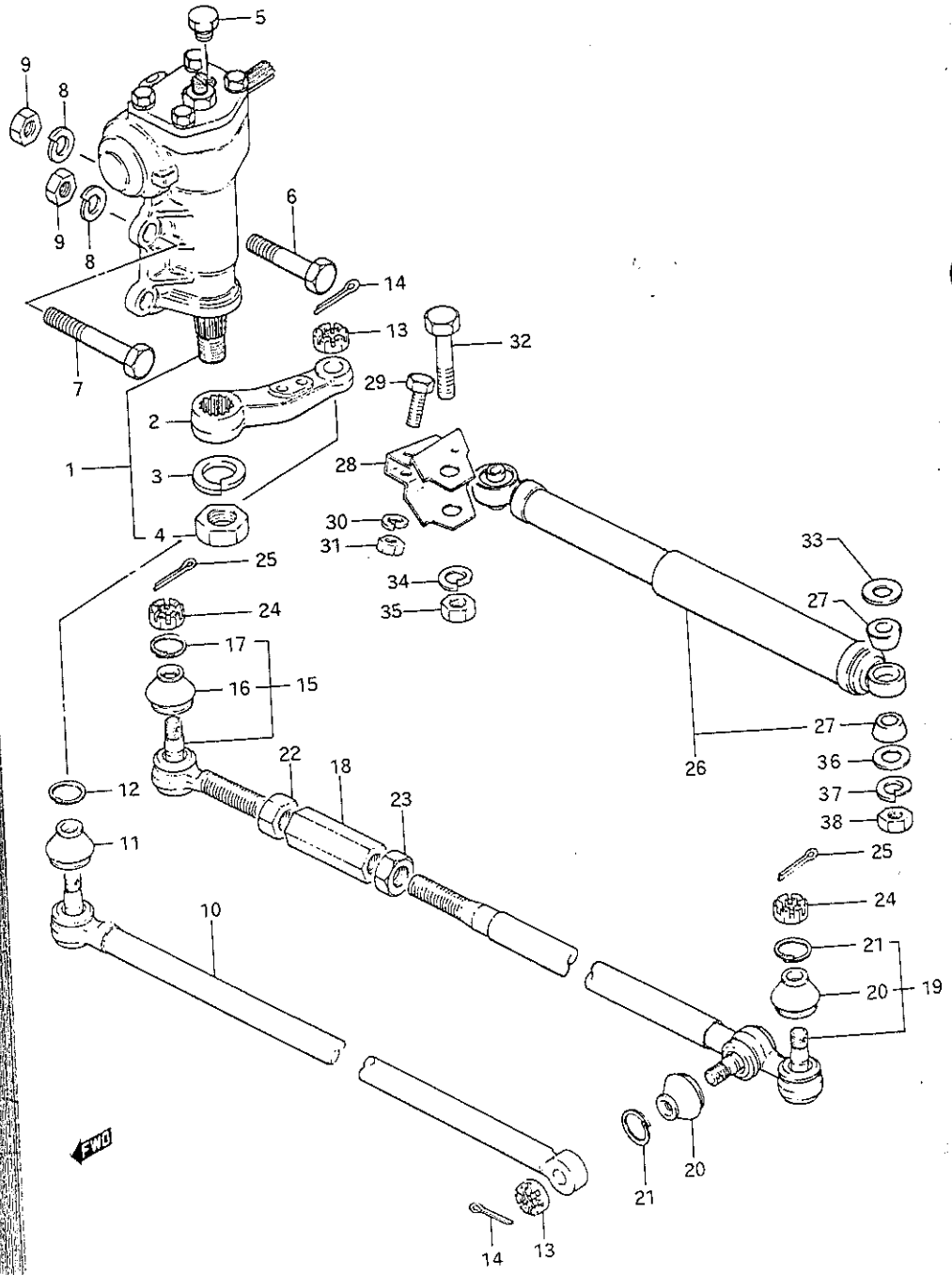

FIG.75 (1-J- 2) STEERING LINK (RHD)

REF.NO.	PART NO.	DESCRIPTION	Q'TY Q/W	Q'TY V	REMARKS
1	48600-80022	BOX ASSY, steering gear	1	1	
2	48671-80011	.ARM, pitman	1	1	
3	48644-80010	.LOCK WASHER	1	1	
4	48674-63240	.NUT	1	1	
5	48633-67040	.PLUG, breather	1	1	
6	01107-12703	BOLT, No.1	1	1	
7	01107-12903	BOLT, No.2	2	2	
8	08321-31123	LOCK WASHER	3	3	
9	08310-11123	NUT	3	3	
10	48900-70A01	ROD ASSY, steering drug	1	1	
11	48806-80000	.DUST SEAL	1	1	
12	09401-27401	.CLIP	1	1	
13	08314-41123	NUT	2	2	
14	04111-30306	COTTER PIN	2	2	
15	48810-60A00	END, tie rod RH	1	1	
16	48806-80000	.DUST SEAL	1	1	
17	09401-27401	.CLIP	1	1	
18	48836-70A00	CONNECTOR, tie rod end	1	1	
19	48870-70A02	TIE ROD, steering	1	1	
20	48806-80000	.DUST SEAL	2	2	
21	09401-27401	.CLIP	2	2	
22	48837-70A00	NUT, RH	1	1	RH threads
23	48838-70A00	NUT, LH	1	1	LH threads
24	08314-41123	NUT	2	2	
25	04111-30306	COTTER PIN	2	2	

FIG.75

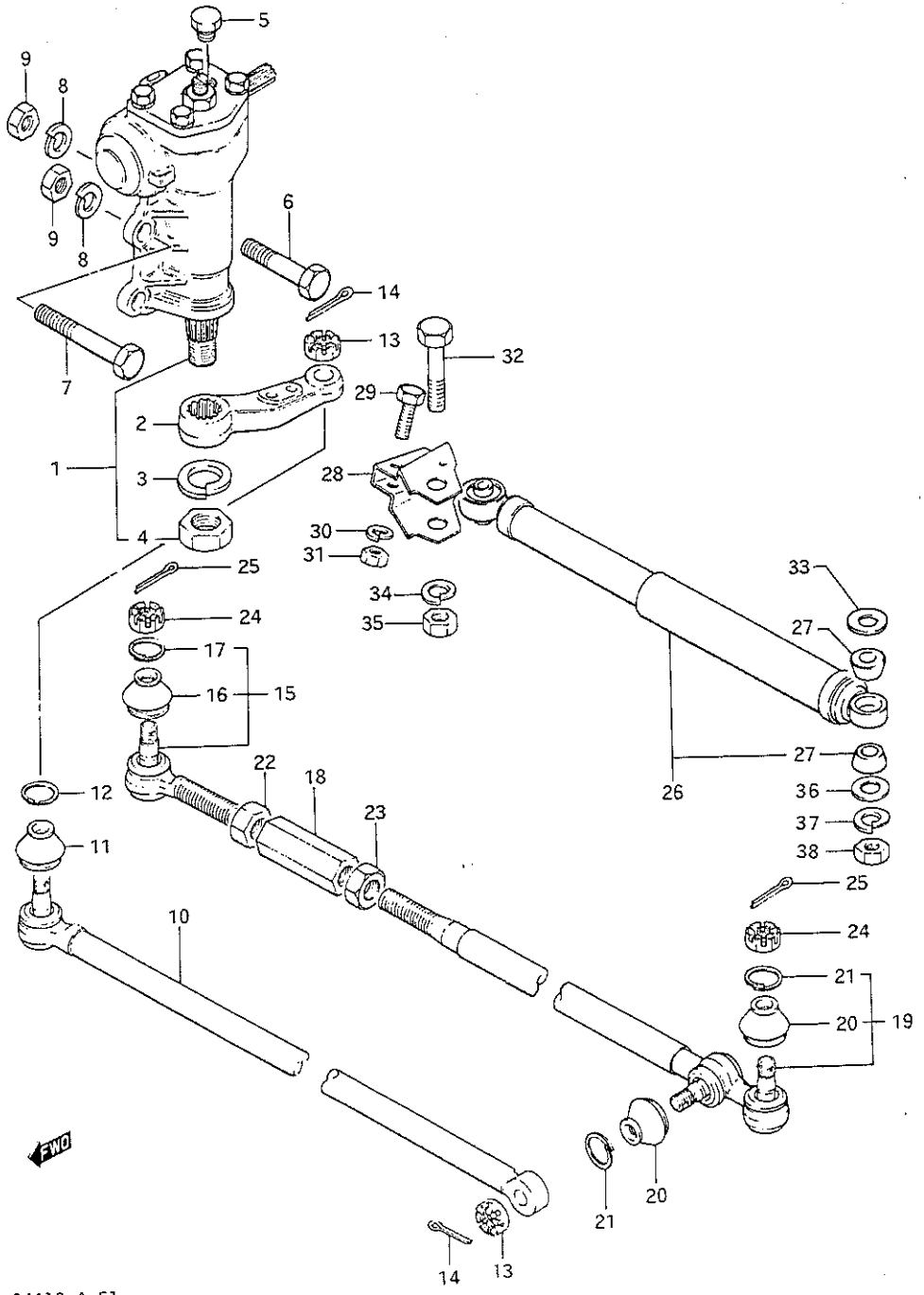

SJ413-4 E1

FIG.75 (1-J- 3) STEERING LINK (RHD)

REF.NO.	PART NO.	DESCRIPTION	Q'TY Q/W	Q'TY V	REMARKS
26	48730-80012	DAMPER ASSY, steering	1	1	
27	41681-58010	.BUSH	2	2	
28	48741-80000	STAY, steering damper	1	1	
29	01107-08303	BOLT	2	2	
30	08321-31083	LOCK WASHER	2	2	
31	08310-11083	NUT	2	2	
32	01104-12553	BOLT	1	1	
33	08322-21123	WASHER	1	1	
34	08321-31123	LOCK WASHER	1	1	
35	08310-11123	NUT	1	1	
36	09160-10078	WASHER (10.2x27x1.6)	1	1	
37	08321-31103	LOCK WASHER	1	1	
38	08310-12103	NUT	1	1	

SJ413-4 E1

FIG.76

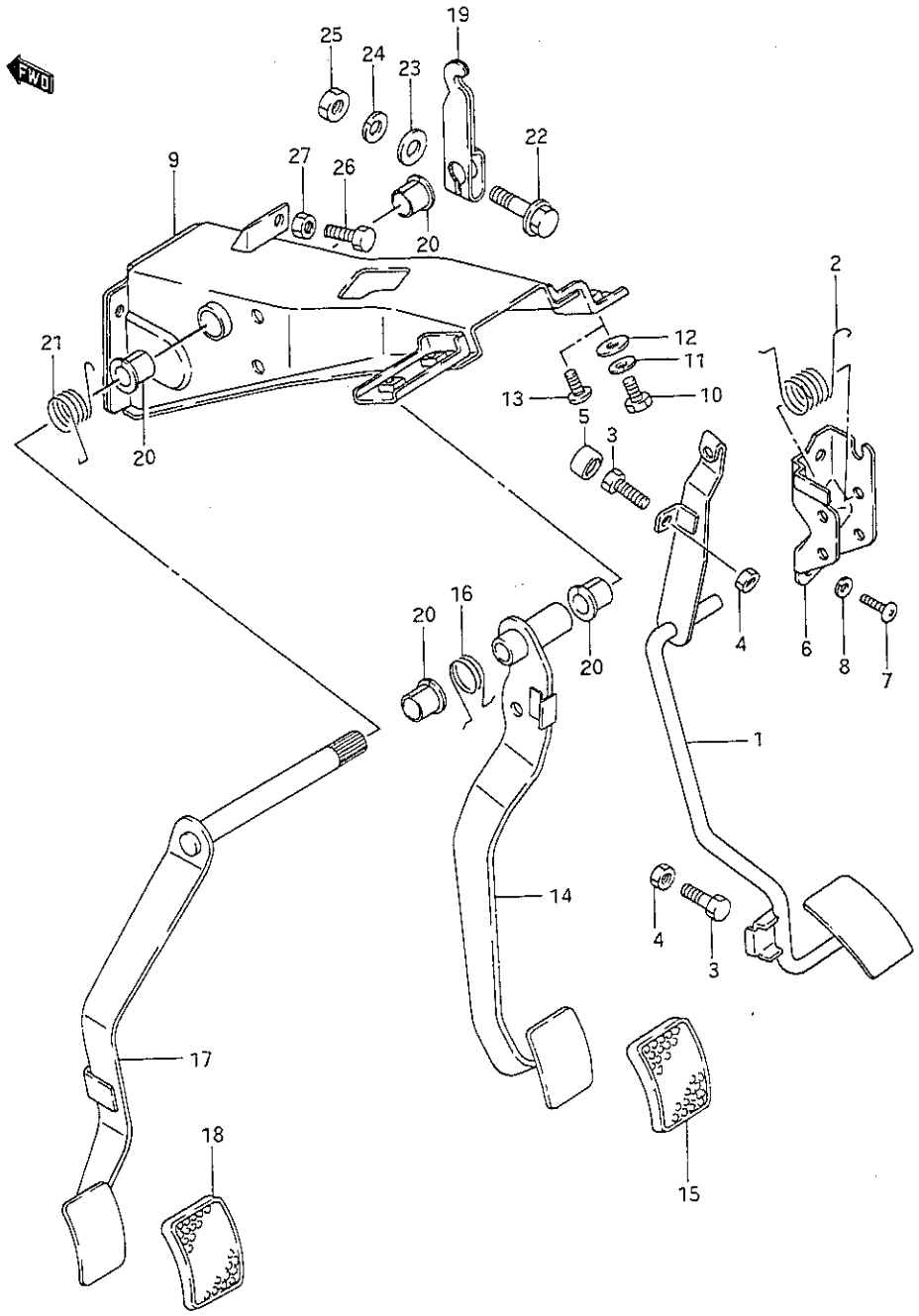

FIG.76 (1-J- 4) PEDAL AND PEDAL BRACKET (LHD)

REF.NO.	PART NO.	DESCRIPTION	Q'TY Q/W	Q'TY V	REMARKS
1	49410-83011	PEDAL, accelerator	1	1	
2	09448-21003	SPRING	1	1	
3	09100-06055	BOLT (6x25)	2	2	
4	08310-11066	NUT	2	2	
5	09251-09002	CUSHION	1	1	
6	49511-80110	BRACKET, accele pedal	1	1	
7	02112-06126	SCREW	2	2	
8	08321-21066	LOCK WASHER	2	2	
9-1	49710-83010	BRACKET, pedal	1	1	
9-2	49710-70A10	BRACKET, pedal	1	1	E22,E25:W/catalyzer
10	01107-08206	BOLT	2	2	
11	08321-21086	LOCK WASHER	2	2	
12	08322-11086	WASHER	2	2	
13	09125-08004	SCREW	2	2	E15,E16,E17,E18,E19, E22,E25,E34,E39,E43, E54
14	49610-80110	PEDAL, brake	1	1	
15	49751-79001	PAD	1	1	
16	09448-31030	SPRING	1	1	
17-1	49810-80110	PEDAL, clutch	1	1	
17-2	49810-70A10	PEDAL, clutch	1	1	E22,E25:W/catalyzer
18	49751-79001	PAD	1	1	
19	49821-80110	ARM, clutch pedal shaft	1	1	
20	09306-14004	BUSH	4	4	
21	09448-30010	SPRING	1	1	
22	01517-08356	BOLT	1	1	
23	08322-11086	WASHER	1	1	
24	08321-21086	LOCK WASHER	1	1	
25	08310-12086	NUT	1	1	
26	09100-06055	BOLT (6x25)	1	1	
27	08310-11066	NUT	1	1	

SJ413-4 E1

FIG.77

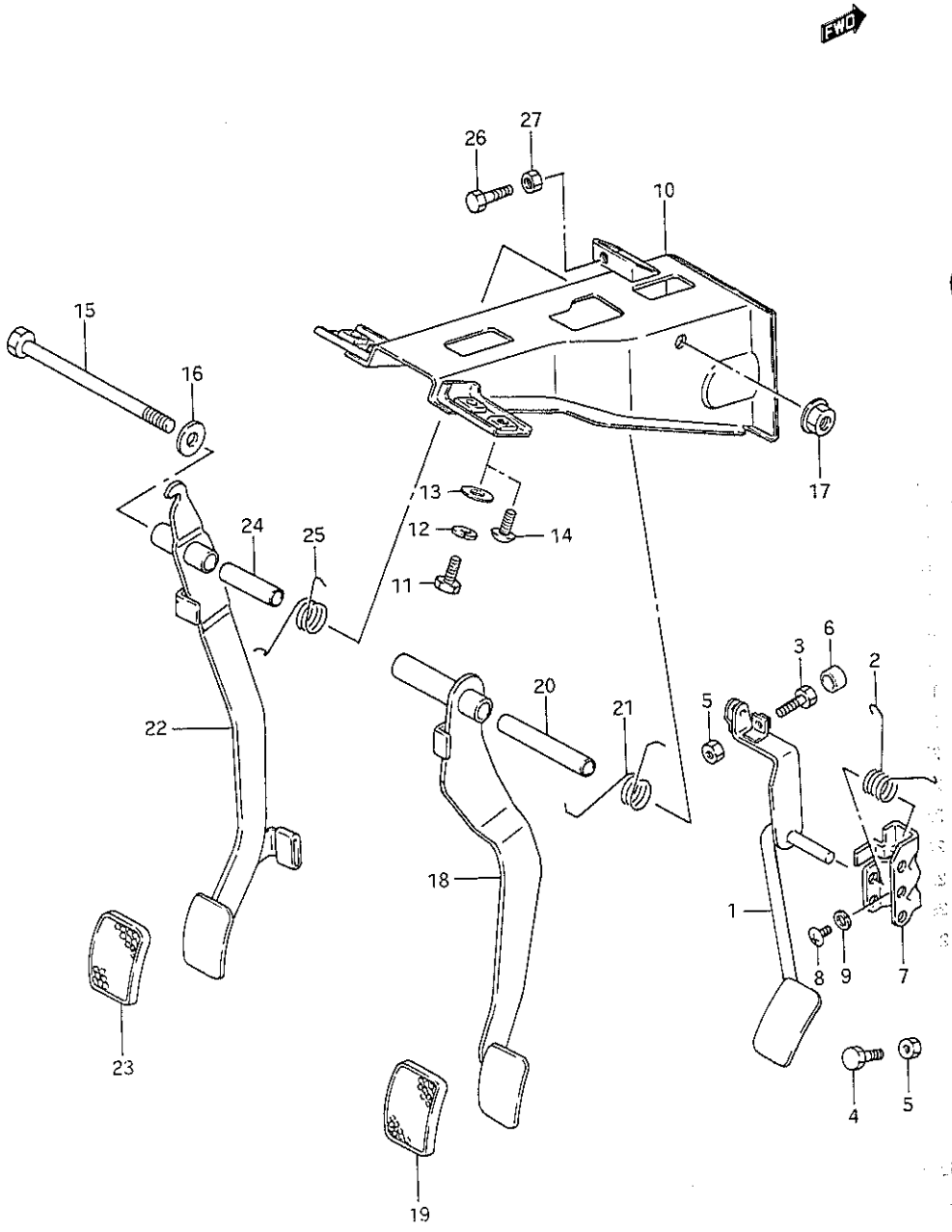

FIG.77 (1-J- 5) PEDAL AND PEDAL BRACKET (RHD)

REF.NO.	PART NO.	DESCRIPTION	Q'TY Q/W	Q'TY V	REMARKS
1	49410-83000	PEDAL, accelerator	1	1	
2	09448-21003	SPRING	1	1	
3	09100-06055	BOLT	1	1	
4	09100-06130	BOLT	1	1	
5	08310-11066	NUT	2	2	
6	09251-09002	CUSHION	1	1	
7	49511-80100	BRACKET, accele pedal	1	1	
8	02112-06126	SCREW	2	2	
9	08321-21066	LOCK WASHER	2	2	
10	49710-83000	BRACKET, pedal	1	1	
11	01107-08206	BOLT	2	2	
12	08321-21086	LOCK WASHER	2	2	
13	08322-11086	WASHER	2	2	
14	09125-08004	SCREW	2	2	E2,E6,E68
15	09100-10056	BOLT (10x160)	1	1	
16	08322-11106	WASHER	1	1	
17	08316-26106	NUT	1	1	
18	49610-80100	PEDAL, brake	1	1	
19	49751-79001	PAD	1	1	
20	09180-10097	SPACER (10.1x13x90)	1	1	
21	09448-31029	SPRING	1	1	
22	49810-80100	PEDAL, clutch	1	1	
23	49751-79001	PAD	1	1	
24	09180-10018	SPACER (10.1x13x56)	1	1	
25	09448-29004	SPRING	1	1	
26	09100-06055	BOLT (6x25)	1	1	
27	08310-11066	NUT	1	1	

FIG.78

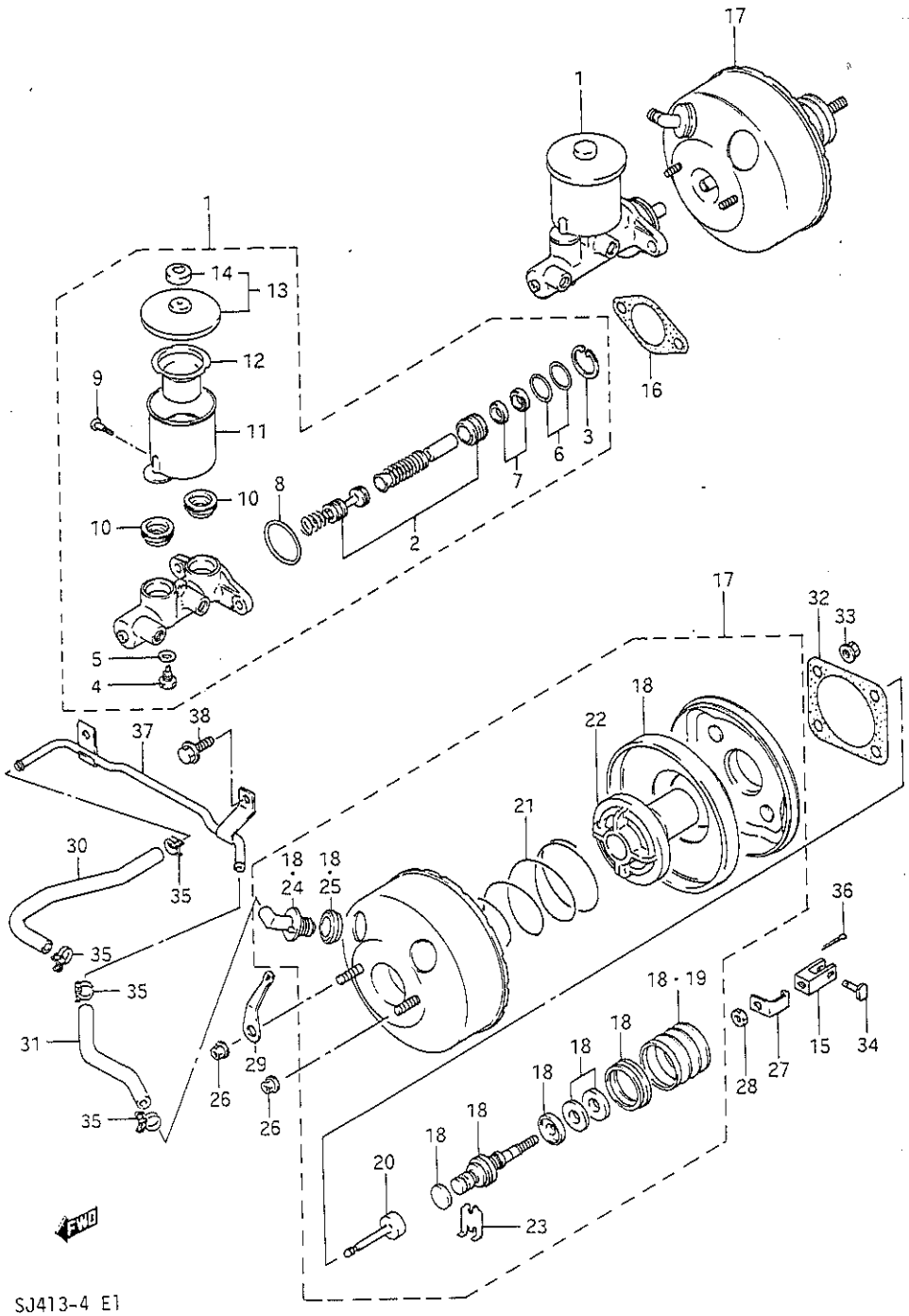

SJ413-4 E1

FIG.78 (1-K- 2) BRAKE MASTER CYLINDER (LHD)

REF.NO.	PART NO.	DESCRIPTION	Q'TY Q/W	Q'TY V	REMARKS
1-1	51100-83270	CYLINDER ASSY, brake master	1	1	
1-2	51100-70A00	CYLINDER ASSY, brake master	1	1	E15,E16,E17,E18,E19, E22,E25,E34,E39,E43, E54
2	51100-83810	.PISTON SET, brake master	1	1	
3	51162-82020	.CIRCLIP, piston stopper	1	1	
4	51165-82020	.BOLT, secondary stopper	1	1	
5	51166-67020	.RING, stopper bolt seal	1	1	
6	51183-82020	.SEALING, piston stopper	2	2	
7	51184-82020	.CUP, cylinder	2	2	
8	51185-82020	.SEALING, master cylinder	1	1	
9	51193-82020	.SCREW, connector	1	1	
10	51197-82020	.GROMMET, reservoir connector	2	2	
11	51211-83020	.RESERVOIR, master cylinder	1	1	
12	51234-83020	.STARINER, cylinder reservoir	1	1	
13	51220-70A00	.CAP ASSY, cylinder reservoir	1	1	
14	51235-82120	..CAP, filler cap breather	1	1	
15	51182-82020	CLEVIS, cylinder push rod	1	1	
16	51199-82020	GASKET, master cylinder	1	1	
17	51300-83170	BOOSTER ASSY, brake master	1	1	
18	51300-83810	.REPAIR KIT, brake master	1	1	
19	51330-82020	.BOOT, booster body	1	1	
20	51350-83020	.ROD ASSY, booster piston	1	1	
21	51360-83121	.SPRING, booster piston	1	1	
22	51363-83170	.PISTON, booster	1	1	
23	51364-83021	.KEY, valve stopper	1	1	
24	51370-83120	.VALVE ASSY, vacuum check	1	1	
25	51371-82020	.GROMMET, check valve	1	1	
26	51313-82020	NUT, booster	2	2	
27	51348-82020	BRACKET, cylinder push rod	1	1	
28	51349-82020	NUT, cylinder push rod	1	1	
29	51372-83120	BRACKET, check valve	1	1	
30-1	51010-83000	HOSE, brake vacuum intake	1	1	
30-2	51010-83200	HOSE, brake vacuum intake	1	1	E15,E16,E18,E19, E25,E39,E43
31	51010-83020	HOSE, brake vacuum	1	1	

SJ413-4 E1

FIG.78

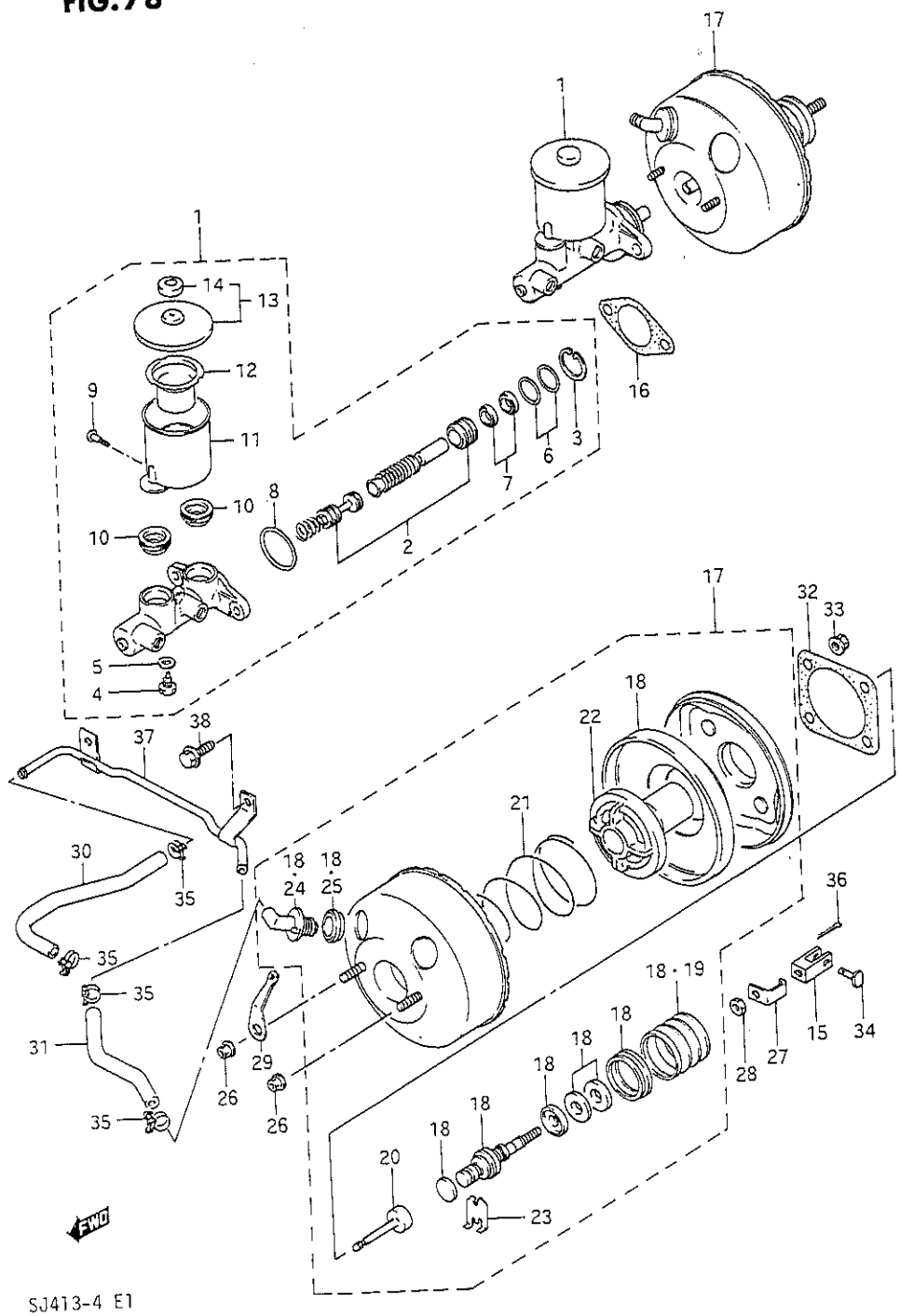

SJ413-4 E1

FIG.78 (1-K- 3) BRAKE MASTER CYLINDER (LHD)

REF.NO.	PART NO.	DESCRIPTION	Q'TY Q/W	Q'TY V	REMARKS
32	51132-82002	GASKET, brake master brakcket	1	1	
33	09159-08052	NUT	4	4	
34	09200-10010	PIN	1	1	
35	09400-19302	CLAMP, vacuum hose No.1	4	4	
36	04111-25206	COTTER PIN	1	1	
37	51380-70A00	PIPE, brake booster	1	1	
38	01517-06103	BOLT	2	2	

SJ413-4 E1

FIG.79

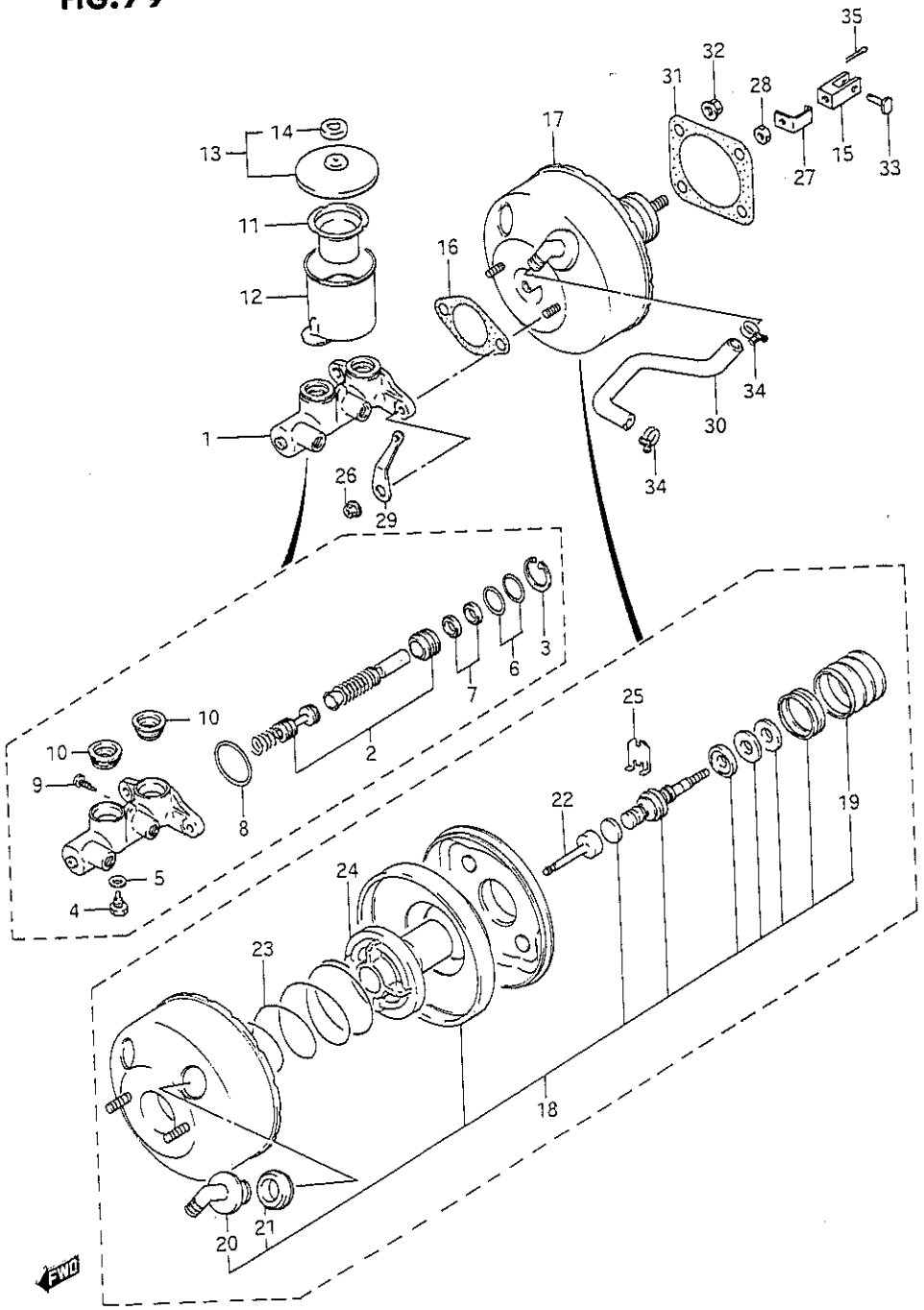

FIG.79 (1-K- 4) BRAKE MASTER CYLINDER (RHD)

REF.NO.	PART NO.	DESCRIPTION	Q'TY Q/W	Q'TY V	REMARKS
1-1	51100-83270	CYLINDER ASSY, brake master	1	1	
1-2	51100-70A00	CYLINDER ASSY, brake master	1	1	E2,E6,E27,E68
2	51100-83810	.PISTON SET, brake master	1	1	
3	51162-82020	.CIRCLIP, piston stopper	1	1	
4	51165-82020	.BOLT, secondary stopper	1	1	
5	51166-67020	.RING, stopper bolt seal	1	1	
6	51183-82020	.SEALING, piston stopper	2	2	
7	51184-82020	.CUP, cylinder	2	2	
8	51185-82020	.SEALING, master cylinder	1	1	
9	51193-82020	.SCREW, connector	1	1	
10	51197-82020	.GROMMET, reservoir connector	2	2	
11	51234-83020	.STRAINER, cylinder reservoir	1	1	
12	51211-83020	.RESERVOIR ASSY	1	1	
13	51220-70A00	.CAP, reservoir	1	1	
14	51235-82120	..CAP, filler cap breather	1	1	
15	51182-82020	CREVICE, cylinder push rod	1	1	
16	51199-82020	GASKET, master cylinder	1	1	
17	51300-83070	BOOSTER ASSY, brake master	1	1	
18	51300-83820	.REPAIR KIT, brake booster	1	1	
19	51330-82020	..BOOT, booster body	1	1	
20	51370-83020	..VALVE ASSY, vacuum check	1	1	
21	51371-82020	..GROMMET, check valve	1	1	
22	51350-83020	.ROD ASSY, booster piston	1	1	
23	51360-83121	.SPRING, booster piston	1	1	
24	51363-83170	.PISTON, booster	1	1	
25	51364-83021	.KEY, valve stopper	1	1	
26	51313-82020	NUT, booster	2	2	
27	51348-82020	BRACKET, cylinder push rod	1	1	
28	51349-82020	NUT, cylinder push rod	1	1	
29	51372-83020	BRACKET, check valve	1	1	
30	51010-83110	HOSE, brake vacuum	1	1	
31	51132-82002	GASKET, brake master bracket	1	1	
32	09159-08052	NUT	4	4	
33	09200-10010	PIN	1	1	
34	09400-19302	CLAMP, vacuum hose No.1	2	2	
35	04111-25206	COTTER PIN	1	1	

SJ413-4 E1

FIG.80

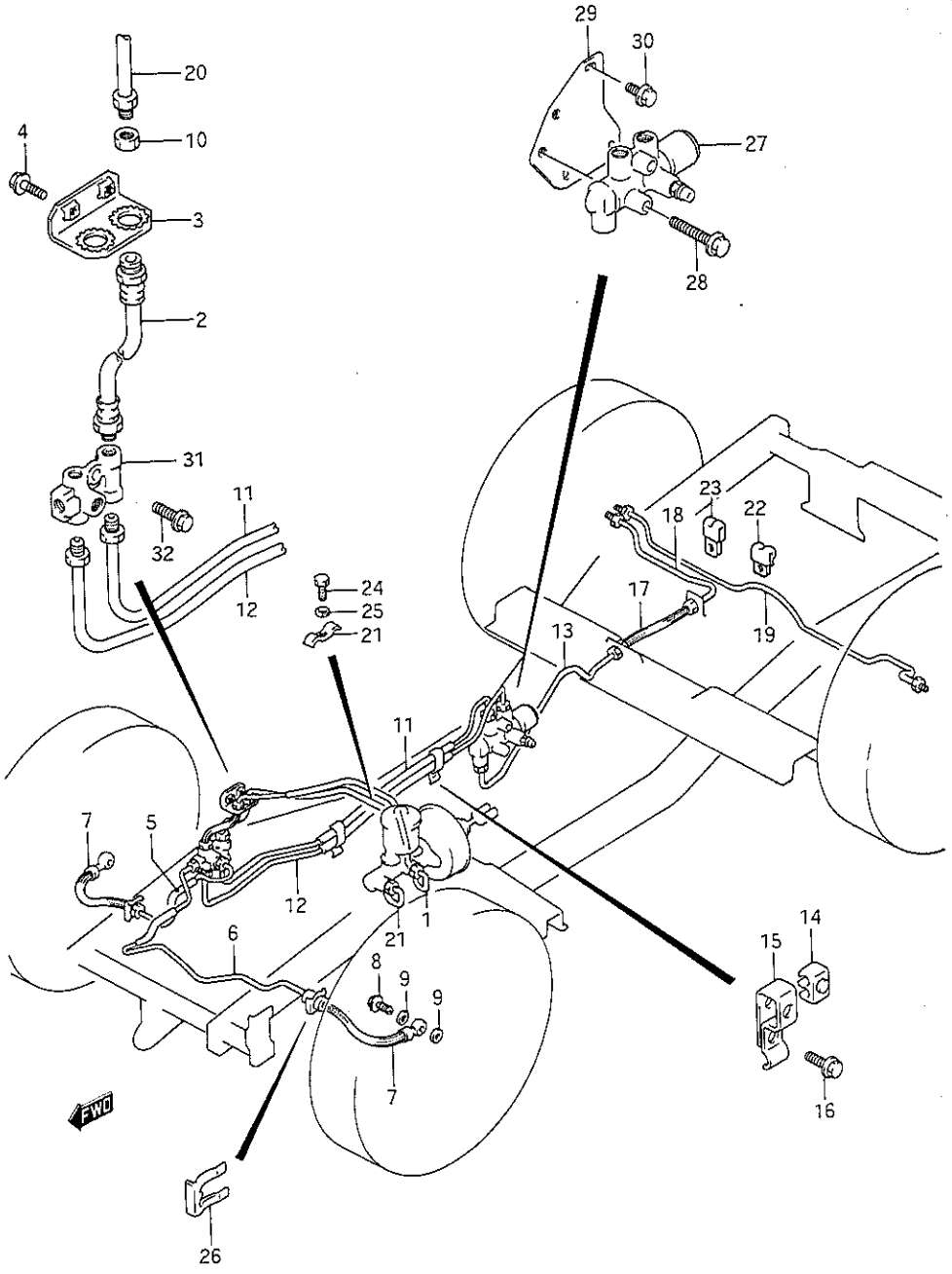

FIG.80 (1-K- 5) BRAKE PIPING (Q,V)

REF.NO.	PART NO.	DESCRIPTION	Q'TY Q	Q'TY V	REMARKS
1-1	51410-83100	PIPE, brake No.1	1	1	LHD
1-2	51410-83000	PIPE, brake No.1	1	1	RHD
1-3	51410-83100	PIPE, brake No.1	1	1	E6,E68
2	51570-70A30	HOSE, cylinder flexible	2	2	
3	51712-83001	BRACKET, master cylinder	1	1	
4	01517-06163	BOLT	2	2	
5	51420-70A00	PIPE, brake No.2	1	1	
6	51430-70A00	PIPE, brake No.3	1	1	
7	51540-80151	HOSE, front flexible	2	2	
8	09360-10026	BOLT	2	2	
9	09161-10009	GASKET	4	4	
10	09140-16007	NUT	2	2	
11	51460-70A00	PIPE, brake No.6	1	1	
12	51340-70A00	PIPE, brake No.14	1	1	
13	51360-70A00	PIPE, brake No.16	1	1	
14	51401-83000	RETAINER, brake pipe	2	2	
15	51402-83000	CLAMP, brake pipe	2	2	
16	09132-06006	SCREW, brake pipe	5	5	
17	51560-83031	HOSE, rear flexible	1	1	
18	51470-70A00	PIPE, brake No.7	1	1	
19	51480-70A00	PIPE, brake No.8	1	1	
20-1	51520-83100	PIPE, brake No.12	1	1	LHD
20-2	51520-83000	PIPE, brake No.12	1	1	RHD
20-3	51520-83100	PIPE, brake No.12	1	1	E6,E68

SJ413-4 E1

FIG. 80

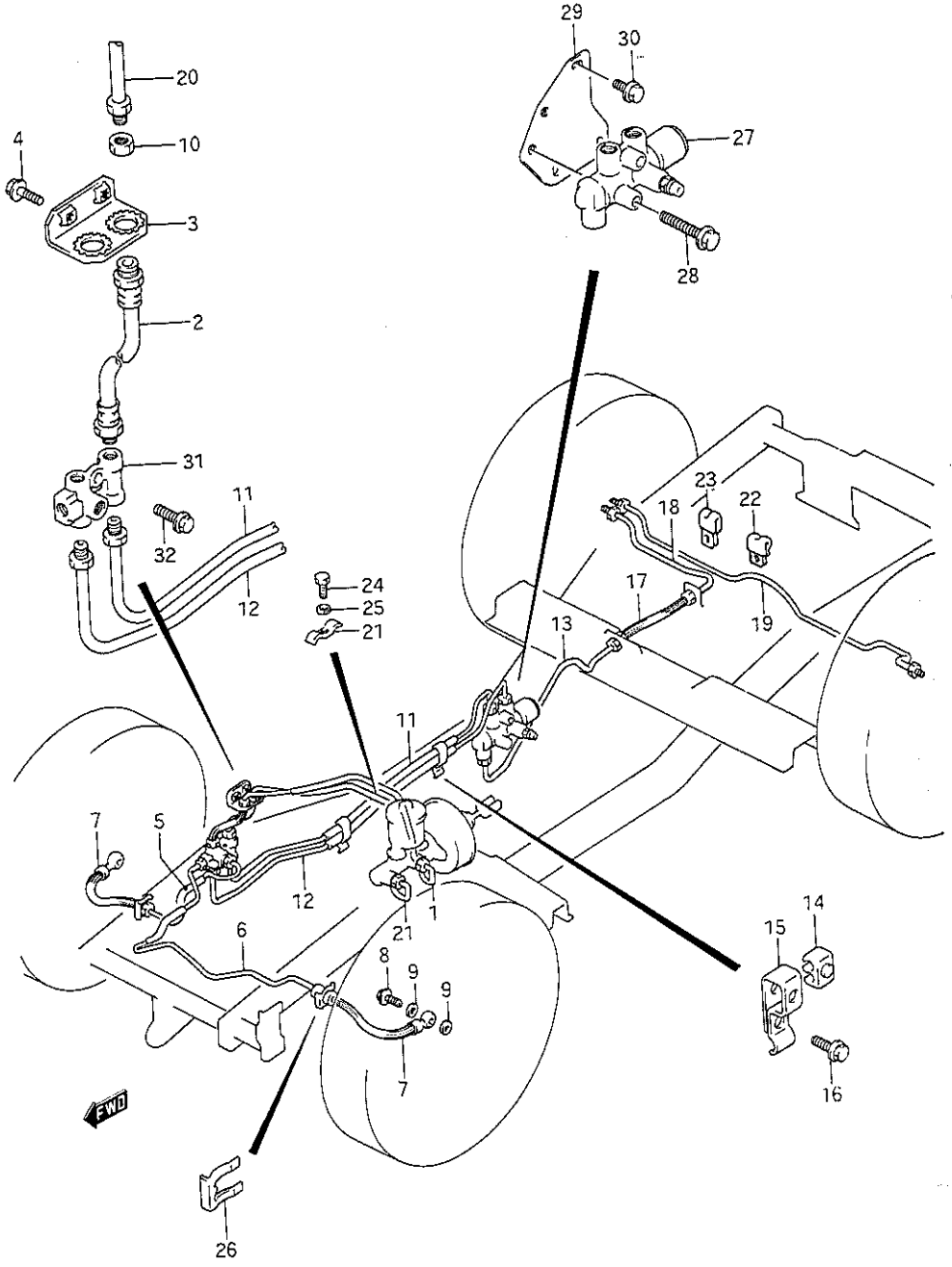

FIG.80 (1-K- 6) BRAKE PIPING (Q,V)

REF.NO.	PART NO.	DESCRIPTION	Q'TY Q	Q'TY V	REMARKS
21-1	09403-07312	CLAMP, pipe No.3	3	3	LHD
21-2	09403-07312	CLAMP, pipe No.3	1	1	RHD
21-3	09403-07312	CLAMP, pipe No.3	3	3	E6,E68
22	09403-06401	CLAMP, pipe rear axle	2	2	LHD
23	09403-06404	CLAMP, pipe rear axle	1	1	LHD
24-1	01107-06123	BOLT	3	3	LHD
24-2	01107-06123	BOLT	1	1	RHD
24-3	01107-06123	BOLT	3	3	E6,E68
25-1	08321-21063	LOCK WASHER	3	3	LHD
25-2	08321-21063	LOCK WASHER	1	1	RHD
25-3	08321-21063	LOCK WASHER	3	3	E6,E68
26	09383-13001	E RING	6	6	
27	51920-70A00	VALVE ASSY, P & B	1	1	
28	01537-06403	BOLT, valve	1	1	
29	51950-70A00	PLATE, proportion valve	1	1	
30	01517-06123	BOLT, valve plate	3	3	
31	51650-83040	JOINT, brake 6 way	1	1	
32	01517-06253	BOLT	2	2	

SJ413-4 E1

FIG. 81

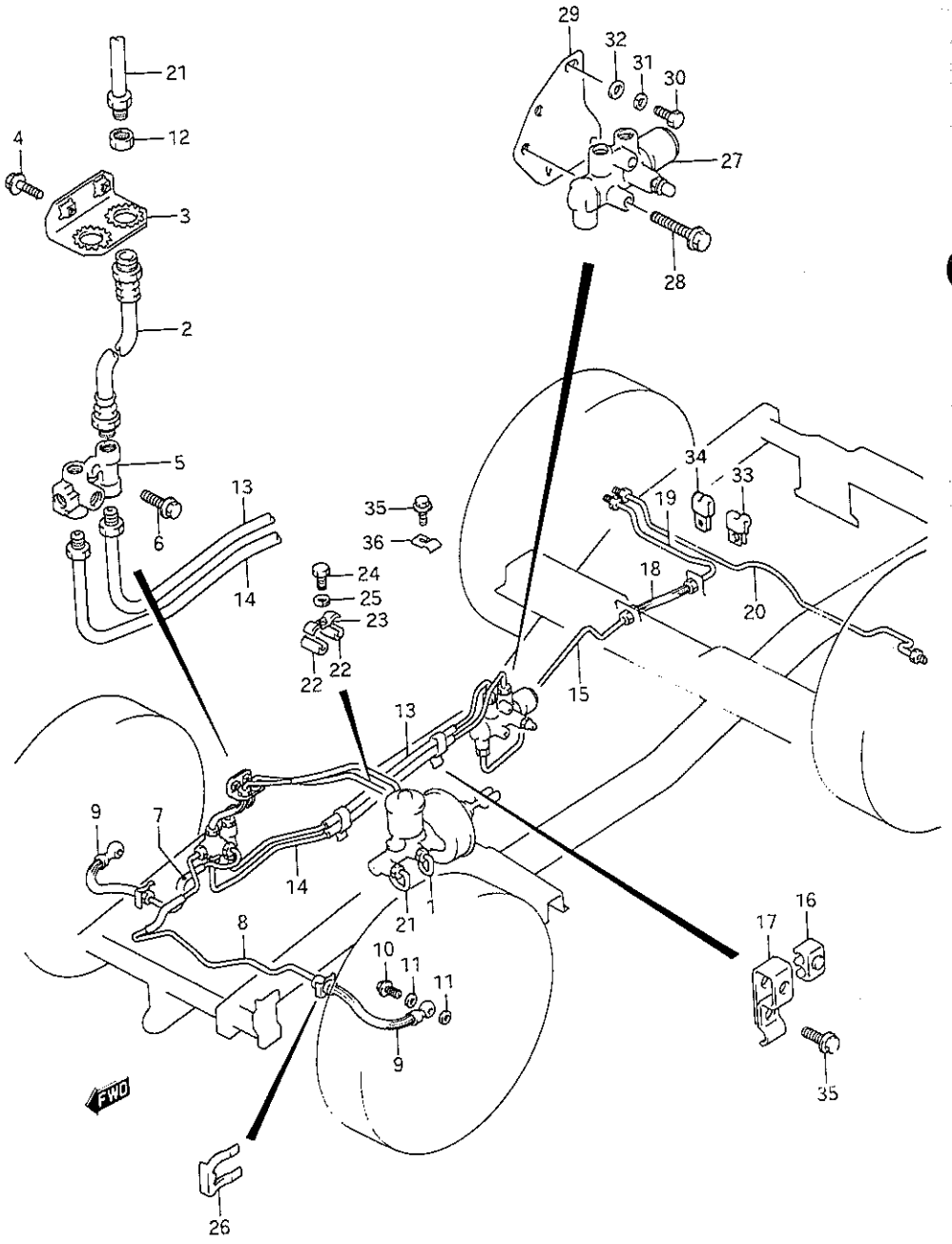

FIG.81 (1-K- 7) BRAKE PIPING (W)

REF.NO.	PART NO.	DESCRIPTION	Q'TY W	REMARKS
1-1	51410-83100	PIPE, brake No.1	1	LHD
1-2	51410-83000	PIPE, brake No.1	1	RHD
2	51570-70A30	HOSE, cylinder flexible	2	
3	51712-83001	BRACKET, master cylinder	1	
4	01517-06163	BOLT	2	
5	51650-83040	JOINT, brake 6 way	1	
6	01517-06253	BOLT	2	
7	51420-70A00	PIPE, brake No.2	1	
8	51430-70A00	PIPE, brake No.3	1	
9	51540-80151	HOSE, front flexible	2	
10	09360-10026	BOLT	2	
11	09161-10009	GASKET	4	
12	09140-16007	NUT	2	
13	51460-70A00	PIPE, brake No.6	1	
14	51340-70A00	PIPE, brake No.14	1	
15	51360-70A10	PIPE, brake No.16	1	
16	51401-83000	RETAINER, brake pipe	2	
17	51402-83000	CLAMP, brake pipe	2	
18	51560-83031	HOSE, rear flexible	1	
19	51470-70A00	PIPE, brake No.7	1	
20	51480-70A00	PIPE, brake No.8	1	
21-1	51520-83100	PIPE, brake No.12	1	LHD
21-2	51520-83000	PIPE, brake No.12	1	RHD
22	51755-67000	PROTECTOR, pipe	7	
23-1	09403-07312	CLAMP, pipe No.3	3	LHD
23-2	09403-07312	CLAMP, Pipe No.3	1	RHD
24-1	01107-06123	BOLT	3	LHD
24-2	01107-06123	BOLT	1	RHD
25-1	08321-21063	LOCK WASHER	3	LHD
25-2	08321-21063	LOCK WASHER	1	RHD
26	09383-13001	E RING	4	

SJ413-4 E1

FIG.81

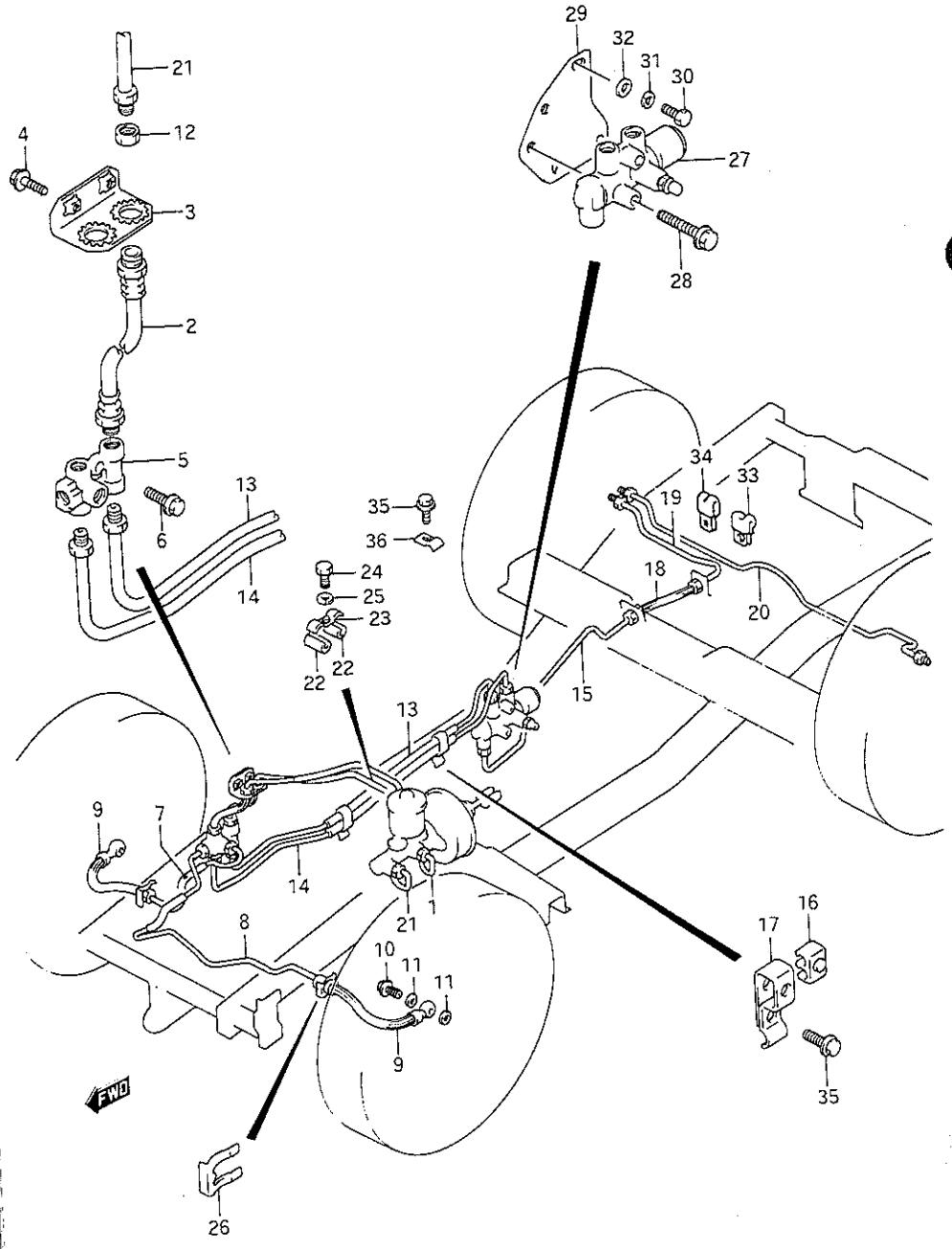

FIG.81 (1-K- 8) BRAKE PIPING (W)

REF.NO.	PART NO.	DESCRIPTION	Q'TY W	REMARKS
27	51920-70A10	VALVE ASSY, P & B	1	
28	01537-06403	BOLT	2	
29	51950-70A00	PLATE, P & B valve	1	
30	01107-06123	BOLT	3	
31	08321-21063	LOCK WASHER	3	
32	08322-21063	WASHER	3	
33	09403-06401	CLAMP, brake pipe rear	2	
34	09403-06404	CLAMP, brake pipe rear	1	
35	09132-06006	SCREW, brake pipe clamp	6	
36	09403-05302	CLAMP, pipe No.1	1	

SJ413-4 E1

FIG.82

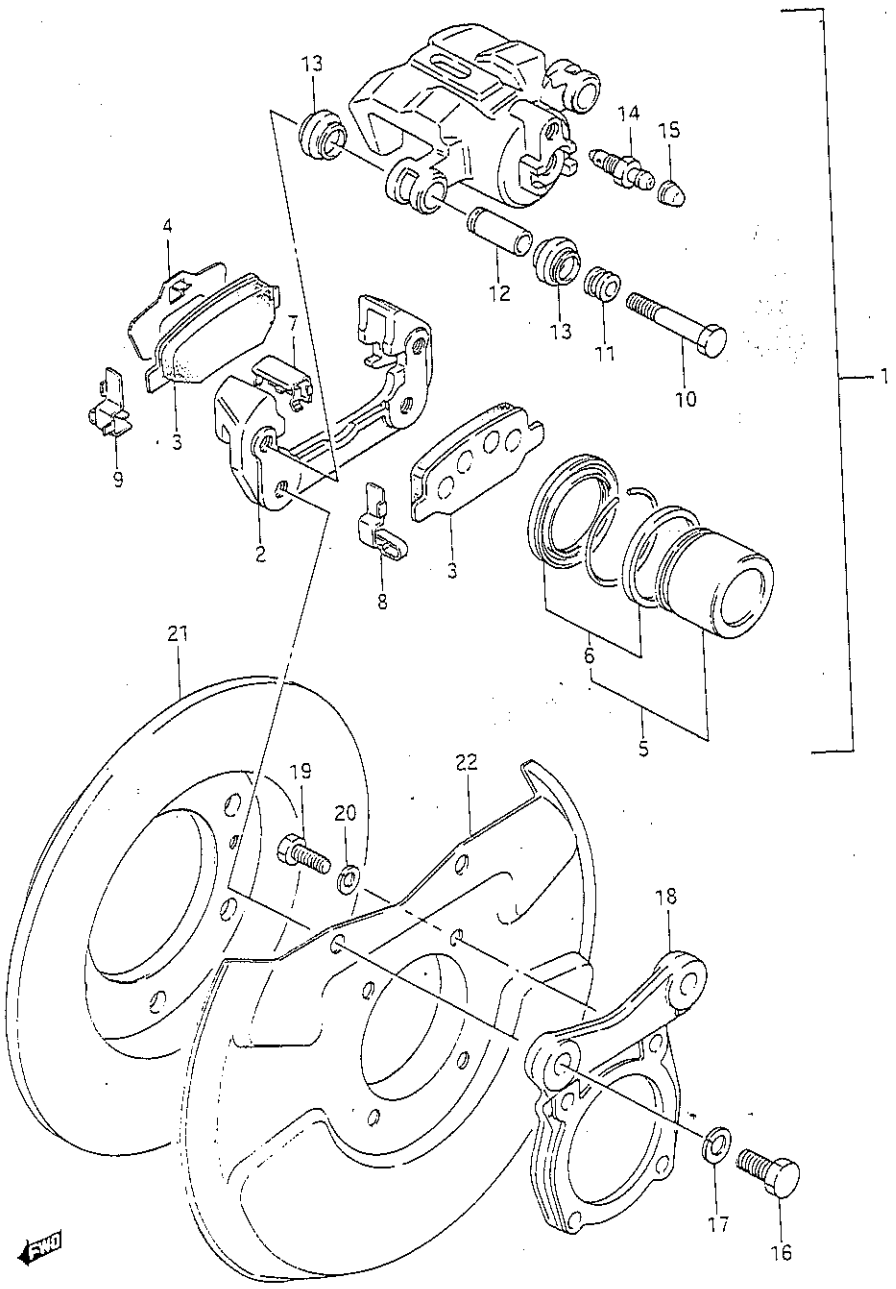

FIG.82 (1-K- 9) FRONT WHEEL BRAKE

REF.NO.	PART NO.	DESCRIPTION	Q'TY Q/W	Q'TY V	REMARKS
1-1	55100-70A30	CALIPER ASSY, disc brake	2	2	
1-2	55100-70A00	CALIPER ASSY, disc brake	2	2	E2,E6,E15,E16,E17, E18,E19,E22,E25,E27, E34,E39,E54,E68
2	55161-80000	.MOUNTING	2	2	
3-1	55110-80020	.PAD, disc brake	4	4	
3-2	55110-70A00	.PAD, disc brake	4	4	E2,E6,E15,E16,E17, E18,E19,E22,E25,E27, E34,E39,E54,E68
4	55115-80000	.SHIM	2	2	
5	55100-82810	.PISTON & BOOT SET	2	2	
6	55100-82820	..SEAL SET, piston	2	2	
7	55233-80000	.PLATE, dust	4	4	
8	55234-80001	.PLATE, pad support No.1	4	4	
9	55235-80001	.PLATE, pad support No.2	4	4	
10	55206-80000	.BOLT	4	4	
11	55196-80002	.SUPPORT, dust boot	4	4	
12	55191-80000	.BUSH, cylinder slide	4	4	
13	55201-80001	.BOOT, bush dust	8	8	
14	52473-60020	.PLUG, bleeder	2	2	
15	52474-60020	.CAP	2	2	
16	09100-12111	BOLT (12x33)	4	4	
17	08321-31123	LOCK WASHER	4	4	
18	55311-80000	HOLDER, brake caliper	2	2	
19	09100-10023	BOLT (10x40.5)	8	8	
20	08321-31103	LOCK WASHER	8	8	
21	55211-80000	DISC, front brake	2	2	
22	55221-80000	DUST COVER	2	2	

55110-80020

55200-70810

FIG.83

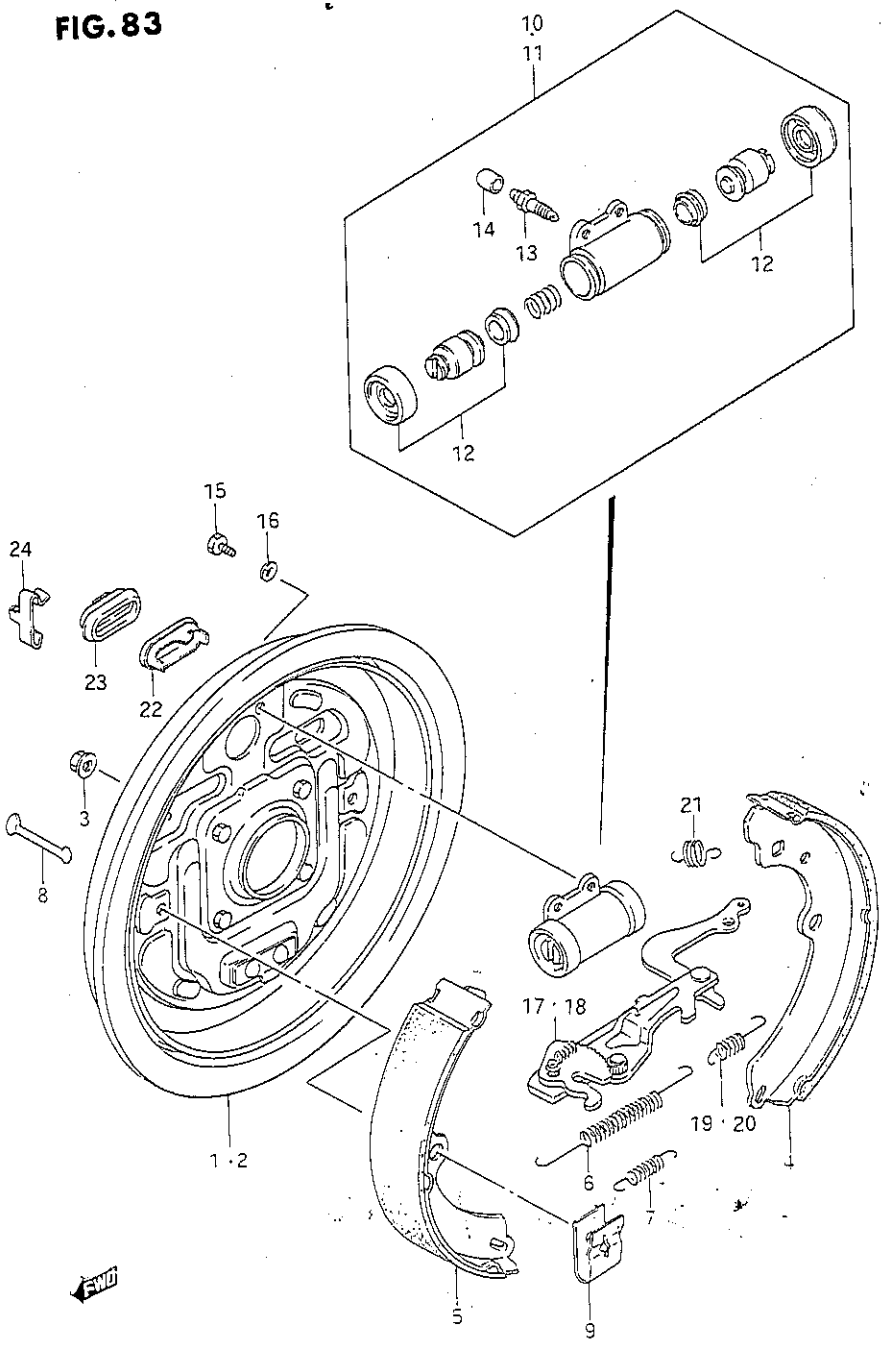

FIG.83 (1-K-10) REAR WHEEL BRAKE

REF.NO.	PART NO.	DESCRIPTION	Q'TY Q/W	Q'TY V	REMARKS
1	53110-83300	PLATE, backing RH	1	1	
2	53160-83300	PLATE, backing LH	1	1	
3	08310-11083	NUT	8	8	
4-1	53201-83310	SHOE, rear	2	2	
4-2	53201-70A00	SHOE, rear	2	2	E2,E6,E15,E16,E17, E18,E19,E22,E25,E27, E34,E39,E54,E68
5-1	53202-83310	SHOE, front	2	2	
5-2	53202-70A00	SHOE, front	2	2	E2,E6,E15,E16,E17, E18,E19,E22,E25,E27, E34,E39,E54,E68
6	53331-80050	SPRING, shoe return A	2	2	
7	53231-83041	SPRING, shoe return B	2	2	
8	52241-85400	PIN, shoe hold down	4	4	
9	52243-79241	SPRING, hold down	4	4	
10	53401-83310	CYLINDER ASSY, rear wheel RH	1	1	
11	53402-83300	CYLINDER ASSY, rear wheel LH	1	1	
12	52400-80820	.PISTON CUP & BOOT SET	2	2	
13	52473-83040	.PLUG, bleeder	1	1	
14	52474-85200	.CAP	1	1	
15	01107-06123	BOLT	4	4	
16	08321-31063	LOCK WASHER	4	4	
17	53810-83300	LEVER ASSY, RH	1	1	
18	53860-83300	LEVER ASSY, LH	1	1	
19	53821-83300	SPRING, rod RH	1	1	
20	53822-83300	SPRING, rod LH	1	1	
21	53711-83300	SPRING, lever return	2	2	
22	53712-83300	CLIP, lever seal	2	2	
23	53713-83300	SEAL, lever	2	2	
24	53714-83300	STOPPER, lever	2	2	

FIG.84

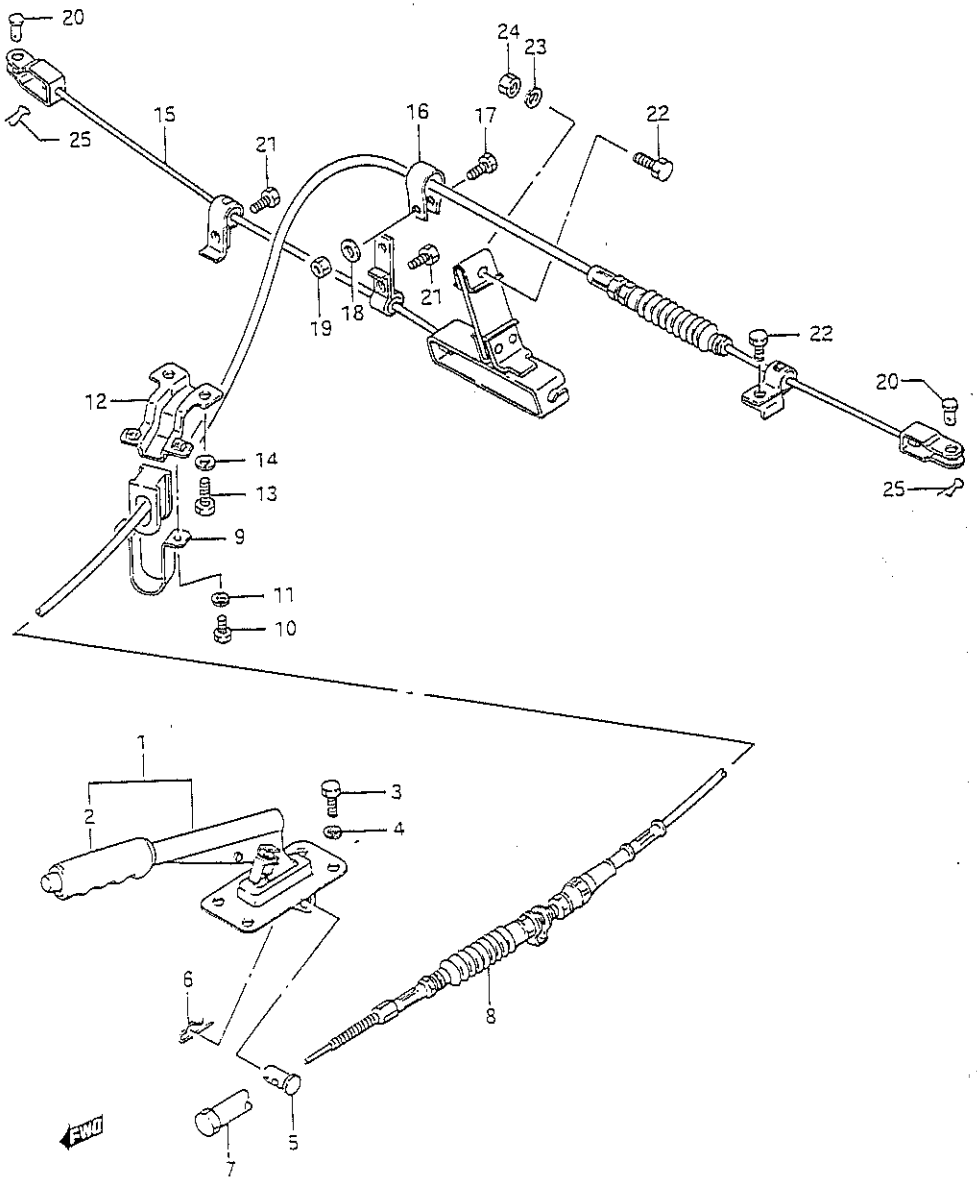

SJ413-4 E1

FIG.84 (1-K-11) PARKING BRAKE

REF.NO.	PART NO.	DESCRIPTION	Q'TY Q/W	Q'TY V	REMARKS
1-1	54100-70A00	LEVER ASSY, parking brake	1	1	
1-2	54100-70A10	LEVER ASSY, parking brake	1	1	E44
1-3	54100-70A20	LEVER ASSY, parking brake	1	-	E6
1-4	54100-83310	LEVER ASSY, parking brake	1	1	E2,E15,E16,E17,E18, E19,E22,E25,E27,E34, E39,E43,E54,E68
2	54112-83310	.GRIP	1	1	
3	01107-06203	BOLT	4	4	
4	08321-31063	LOCK WASHER	4	4	
5	54161-83300	PIN, lever	1	1	
6	09385-12001	CLIP, lever pin	1	1	
7	54683-83300	NUT, cable adjust	1	1	
8-1	54640-70A00	CABLE, No.1	1	1	Q,V
8-2	54640-70A10	CABLE, No.1	1	-	W
9	54682-83300	BRACKET, cable	1	1	
10	01107-06123	BOLT	2	2	
11	08321-21063	LOCK WASHER	2	2	
12-1	54681-83300	STAY, cable bracket	1	1	Q,V
12-2	54681-83600	STAY, cable bracket	1	-	W
13	01107-08163	BOLT	2	2	
14	08321-21083	LOCK WASHER	2	2	
15	54660-83310	CABLE, No.2	1	1	
16	54691-83300	BAND, cable	1	1	
17	09128-06049	SCREW, band	1	1	
18	09160-06077	WASHER, band	1	1	
19	08310-11063	NUT	1	1	
20	09200-08059	PIN, cable	2	2	
21	09128-06045	SCREW, cable clamp	3	3	
22	01107-08203	BOLT	1	1	
23	08321-21083	LOCK WASHER	1	1	
24	08310-11083	NUT	1	1	
25	09385-08004	CLIP, pin	2	2	

SJ413-4 E1

FIG. 85

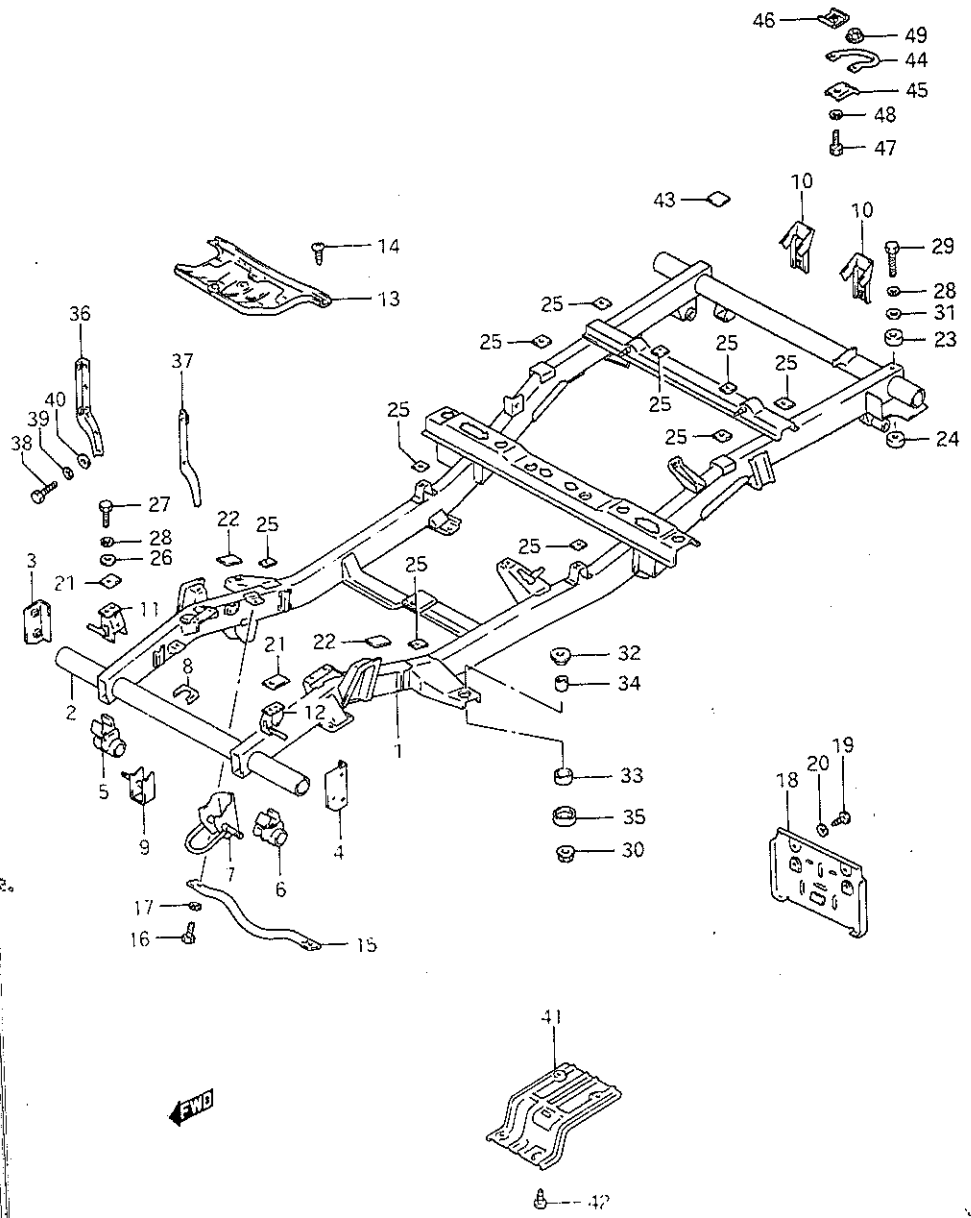

FIG.85 (2-A- 2) CHASSIS FRAME (Q,V)

REF.NO.	PART NO.	DESCRIPTION	Q'TY Q	Q'TY V	REMARKS
1-1	57000-70A60	CHASSIS FRAME	1	1	LHD
1-2	57000-70A10	CHASSIS FRAME	1	1	RHD
2	57211-80000	.CROSS MEMBER, 1st	1	1	
3	57461-80001	.BRACKET, bumper RH	1	1	
4	57471-80001	.BRACKET, bumper LH	1	1	
5	57710-83301	.HANGER, front spring RH	1	1	
6	57720-83301	.HANGER, front spring LH	1	1	
7-1	57270-83021	.BRACKET, 1st cross member	1	1	LHD
7-2	57270-83011	.BRACKET, 1st cross member	1	1	RHD
8	57551-83000	.BRACKET, engine splash panel	1	1	
9	57680-83001	.BRACKET, stabilizer	1	1	
10	57280-80020	.BRACKET, rear license	2	2	
11	57310-83000	.BRACKET, 1st mounting RH	1	1	
12	57320-83000	.BRACKET, 1st mounting LH	1	1	
13	71411-83000	PANEL, engine splash	1	1	
14	03241-06103	SCREW	2	2	
15	71441-83002	MEMBER, sub	1	1	
16	01107-10203	BOLT	2	2	
17	08321-21103	LOCK WASHER	2	2	
18-1	57151-73003	BRACKET, rear license	1	1	
18-2	71481-80030	BRACKET, rear license	1	1	E2,E6,E15,E16,E17, E18,E19,E22,E25,E34, E39,E54,E68,E81
19	02112-06123	SCREW	5	5	
20	08321-21063	LOCK WASHER	5	5	
21	71491-80000	PAD, body mount No.1	2	2	45x45x15
22	71493-83001	PAD, body mount No.3	2	2	
23	71494-80001	PAD, body mount No.4	2	2	9.5x40x8
24	71494-80201	PAD, body mount No.4	2	2	15x40x8
25-1	57321-52001	PAD, body mount No.2 (T:5)	AR	4~10	
25-2	71492-80010	PAD, body mount No.2 (T:8)	AR	0~10	
26	09160-10002	WASHER (10.5x30x3.2)	2	2	
27	01107-10406	BOLT	2	2	
28	08321-31106	LOCK WASHER	2	2	
29	09100-10168	BOLT, 4th mount	2	2	
30	09159-10060	NUT, 2nd/3rd mount	6	6	
31	09160-10094	WASHER, 4th mounting	2	2	

SJ413-4 E1

FIG.85

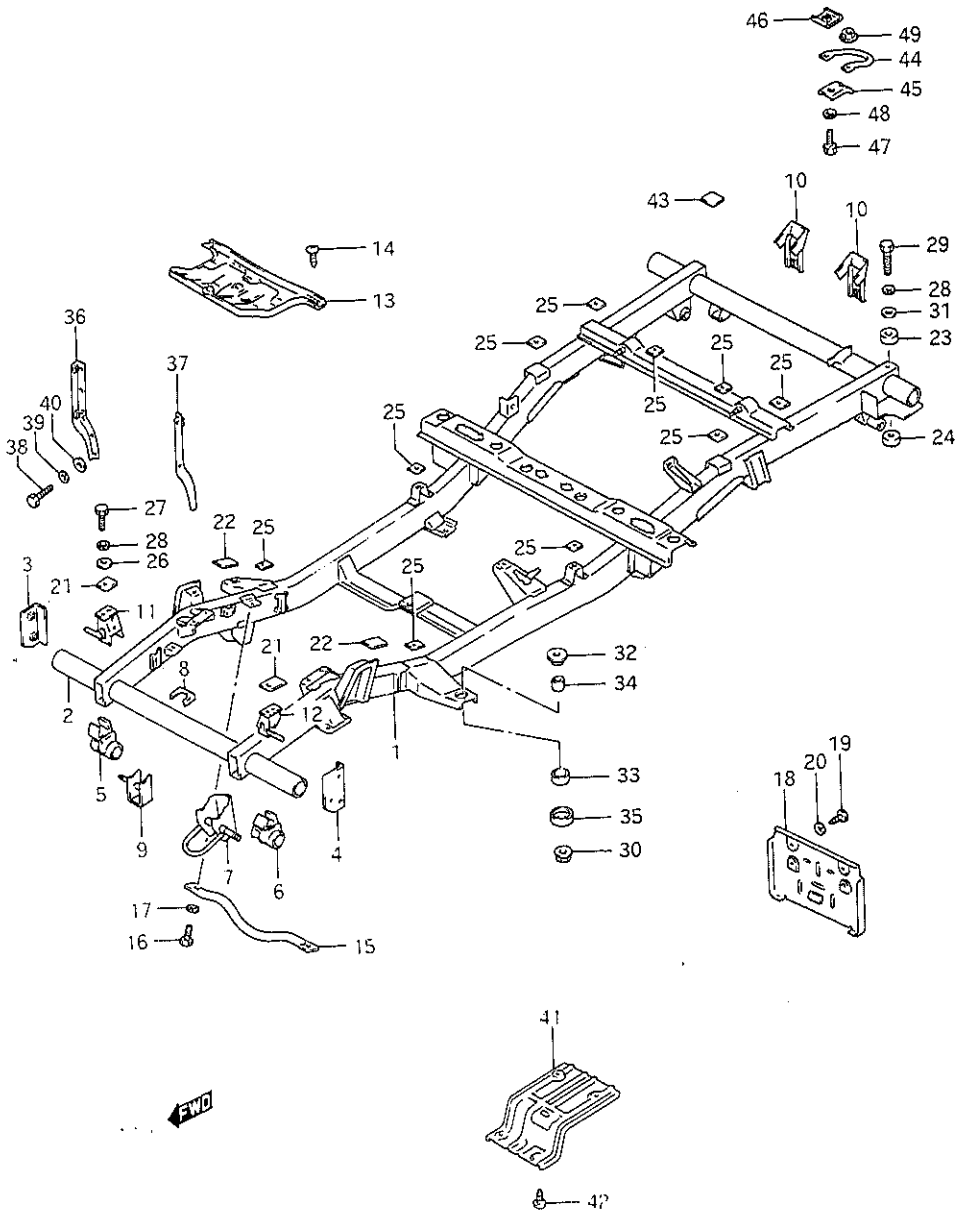

FIG.85 (2-A- 3) CHASSIS FRAME (Q,V)

REF.NO.	PART NO.	DESCRIPTION	Q'TY Q	Q'TY V	REMARKS
32	71610-83000	CUSHION, mount upper	6	6	
33	71620-83000	CUSHION, mount lower	6	6	
34	71631-83000	COLLAR, body mount	6	6	
35	71632-83000	BOTTOM, body mounting	6	6	
36	71420-83000	STAY, radiator RH	1	1	
37	71430-83000	STAY, radiator LH	1	1	
38	01107-08166	BOLT	4	4	
39	08321-21086	LOCK WASHER	4	4	
40	08322-11086	WASHER	4	4	
41	75411-83000	PANEL, heat protector	1	1	
42	03141-06123	SCREW	4	4	
43	77151-82000	FILM, member 4th mounting	3	3	
44	71471-83300	HOOK, rear	1	1	
45	71472-80030	SUPPORT, rear hook	1	1	E2,E6,E15,E16,E17, E18,E19,E22,E25,E34, E39,E54,E68
46	71473-80030	REINF, rear hook	1	1	E2,E6,E15,E16,E17, E18,E19,E22,E25,E34, E39,E54,E68
47	01107-12303	BOLT	2	2	
48	08321-21123	LOCK WASHER	2	2	
49	08316-16123	NUT	2	2	

FIG.86

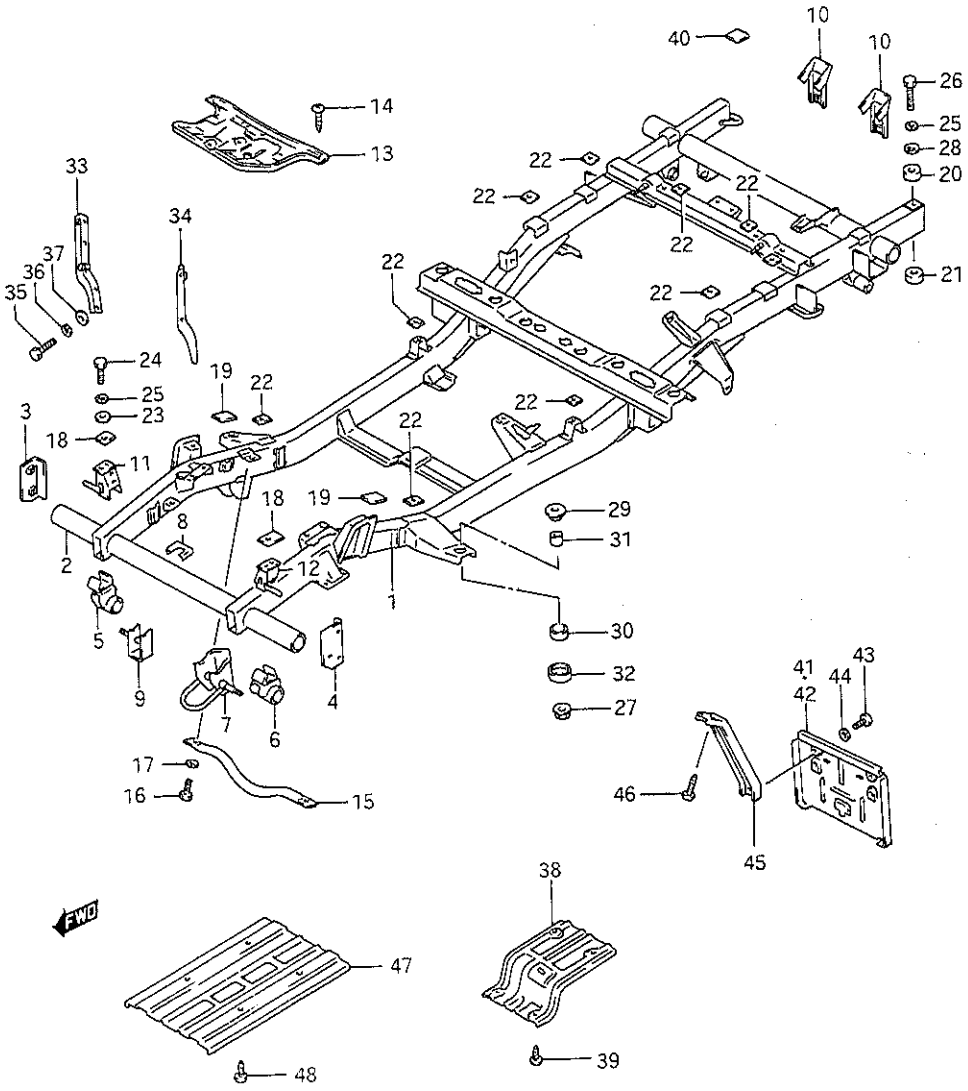

FIG.86 (2-A- 4) CHASSIS FRAME (W)

REF.NO.	PART NO.	DESCRIPTION	Q'TY W	REMARKS
1-1	57000-74A50	CHASSIS FRAME	1	LHD
1-2	57000-74A10	CHASSIS FRAME	1	RHD
2	57211-80000	.CROSS MEMBER, 1st	1	
3	57461-80001	.BRACKET, bumper RH	1	
4	57471-80001	.BRACKET, bumper LH	1	
5	57710-83301	.HANGER, front spring RH	1	
6	57720-83301	.HANGER, front spring LH	1	
7-1	57270-83021	.BRACKET, 1st cross member	1	LHD
7-2	57270-83011	.BRACKET, 1st cross member	1	RHD
8	57551-83000	.BRACKET, engine splash panel	1	
9	57680-83001	.BRACKET, stabilizer	1	
10	57280-80020	.BRACKET, rear license	2	
11	57310-83000	.BRACKET, 1st mounting RH	1	
12	57320-83000	.BRACKET, 1st mounting LH	1	
13	71411-83000	PANEL, engine splash	1	
14	03241-06103	SCREW	2	
15	71441-83002	MEMBER, sub	1	
16	01107-10203	BOLT	2	
17	08321-21103	LOCK WASHER	2	
18	71491-80000	PAD, body mount No.1	2	45x45x15
19	71493-83001	PAD, body mount No.3	2	
20	71494-80001	PAD, body mount No.4	2	9.5x40x8
21	71494-80201	PAD, body mount No.4	2	15x40x8
22-1	57321-52001	PAD, body mount No.2 (T:5)	0~14	
22-2	71492-80010	PAD, body mount No.2 (T:8)	0~14	
23	09160-10002	WASHER (10.5x30x3.2)	2	
24	01107-10406	BOLT	2	
25	08321-31106	LOCK WASHER	2	
26	09100-10168	BOLT, 4th mount	2	
27	09159-10060	NUT, 2nd/3rd mount	6	
28	09160-10094	WASHER, 4th mounting	2	
29	71610-83000	CUSHION, mount upper	6	
30	71620-83000	CUSHION, mount lower	6	

SJ413-4 E1

FIG.86

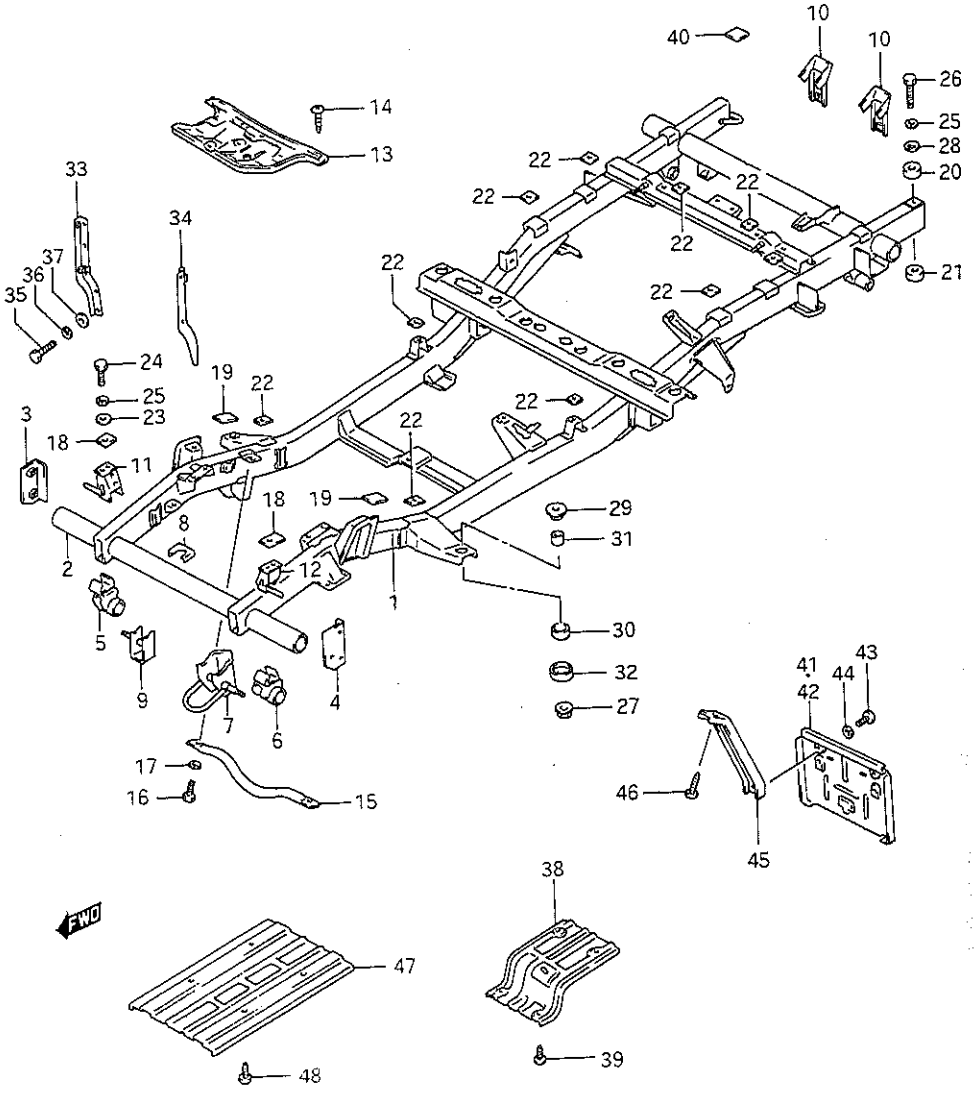

FIG.86 (2-A- 5) CHASSIS FRAME (W)

REF.NO.	PART NO.	DESCRIPTION	Q'TY W	REMARKS
31	71631-83000	COLLAR, body mount	6	
32	71632-83000	BOTTOM, body mounting	6	
33	71420-83000	STAY, radiator RH	1	
34	71430-83000	STAY, radiator LH	1	
35	01107-08166	BOLT	4	
36	08321-21086	LOCK WASHER	4	
37	08322-11086	WASHER	4	
38	75411-83000	PANEL, heat protector	1	
39	03141-06123	SCREW	4	
40	77151-82000	FILM, member 4th mounting	3	
41	57151-73003	BRACKET, rear license	1	
42	71481-80030	BRACKET, rear license	1	E2,E15,E16,E17,E18, E19,E25,E34,E39,E54
43	02112-06123	SCREW	5	
44	08321-21063	LOCK WASHER	5	
45	75421-80300	SUPPORT, RR license bracket	1	
46	03141-06163	SCREW	1	
47	75431-80300	PANEL, HTR protector	1	
48	03141-06126	SCREW	4	

SJ413-4 E1

FIG. 87

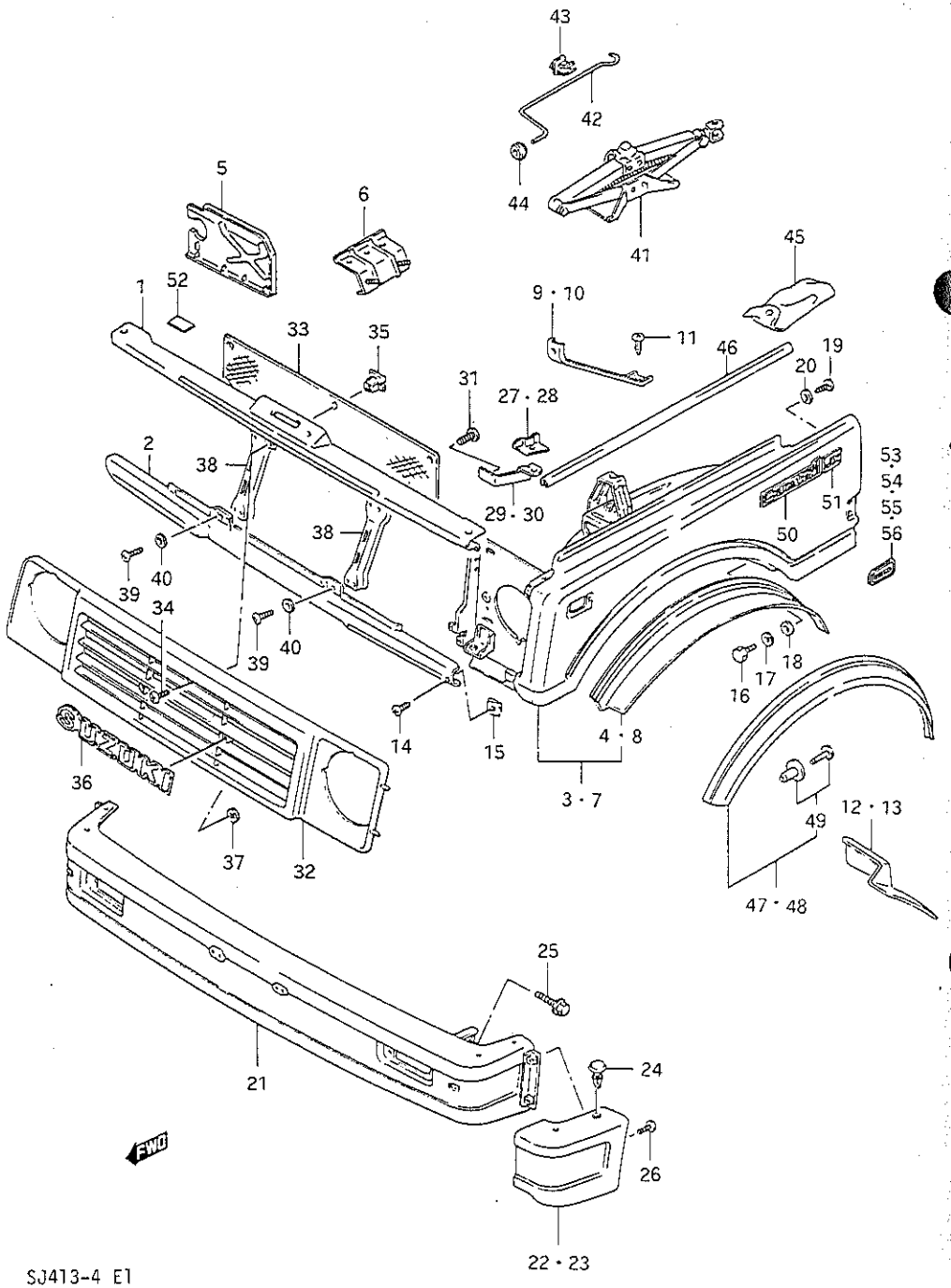

SJ413-4 E1

FIG.87 (2-A- 6) FRONT BODY

REF.NO.	PART NO.	DESCRIPTION	Q'TY Q/W	Q'TY V	REMARKS
1	58100-70A02	PANEL, front	1	1	
2	58200-83002	MEMBER, front lower	1	1	
3-1	58600-70A00	PANEL, fender RH	1	1	
3-2	58600-70A10	PANEL, fender RH	1	1	E2,E6,E15,E16,E17, E18,E19,E22,E25,E34, E39,E54,E68,E98
4	58622-83002	.HOLDER, extension RH	1	1	
5	58763-83001	.BAFFLE, front fender	1	1	
6	58726-83001	.BRACKET, air cleaner lower	1	1	
7-1	58800-70A00	PANEL, fender LH	1	1	
7-2	58800-70A10	PANEL, fender LH	1	1	E2,E6,E15,E16,E17, E18,E19,E22,E25,E34, E39,E54,E68,E98
8	58822-83002	.HOLDER, extension LH	1	1	
9	58723-83001	MEMBER, headlamp housing RH	1	1	
10	58923-83001	MEMBER, headlamp housing LH	1	1	
11	09125-06075	SCREW	2	2	
12	58771-80001	LINER, fender RH	1	1	
13	58971-80001	LINER, fender LH	1	1	
14	09125-06075	SCREW	2	2	
15	09148-06003	NUT	2	2	
16	01107-06127	BOLT	12	12	
17	08321-21067	LOCK WASHER	12	12	
18	09160-06019	WASHER (6.5x16x1.2)	12	12	
19	09125-06075	SCREW (L:18)	18	18	
20	09160-06003	WASHER (6.7x16x1.8)	2	2	
21-1	71710-83301-162	BAR, front bumper ~~71810-83302-~~	1	1	162 71710-83302-162
21-2	71710-70A10-162	BAR, front bumper	1	1	E15,E16,E17
22	71741-83301	PROTECTOR, bumper corner RH	1	1	
23	71742-83301	PROTECTOR, bumper corner LH	1	1	
24	09409-07311	CLIP, protector	6	6	
25	01514-08123	BOLT	4	4	
26	02142-06123	SCREW	4	4	
27	65951-80000	REINF, fender outer front RH	1	-	W
28	65952-80000	REINF, fender outer front LH	1	-	W
29	65953-83000	STAY, front fender RH	1	-	W
30	65954-83000	STAY, front fender LH	1	-	W
31	09125-06075	SCREW	2	-	W

SJ413-4 E1

FIG.87

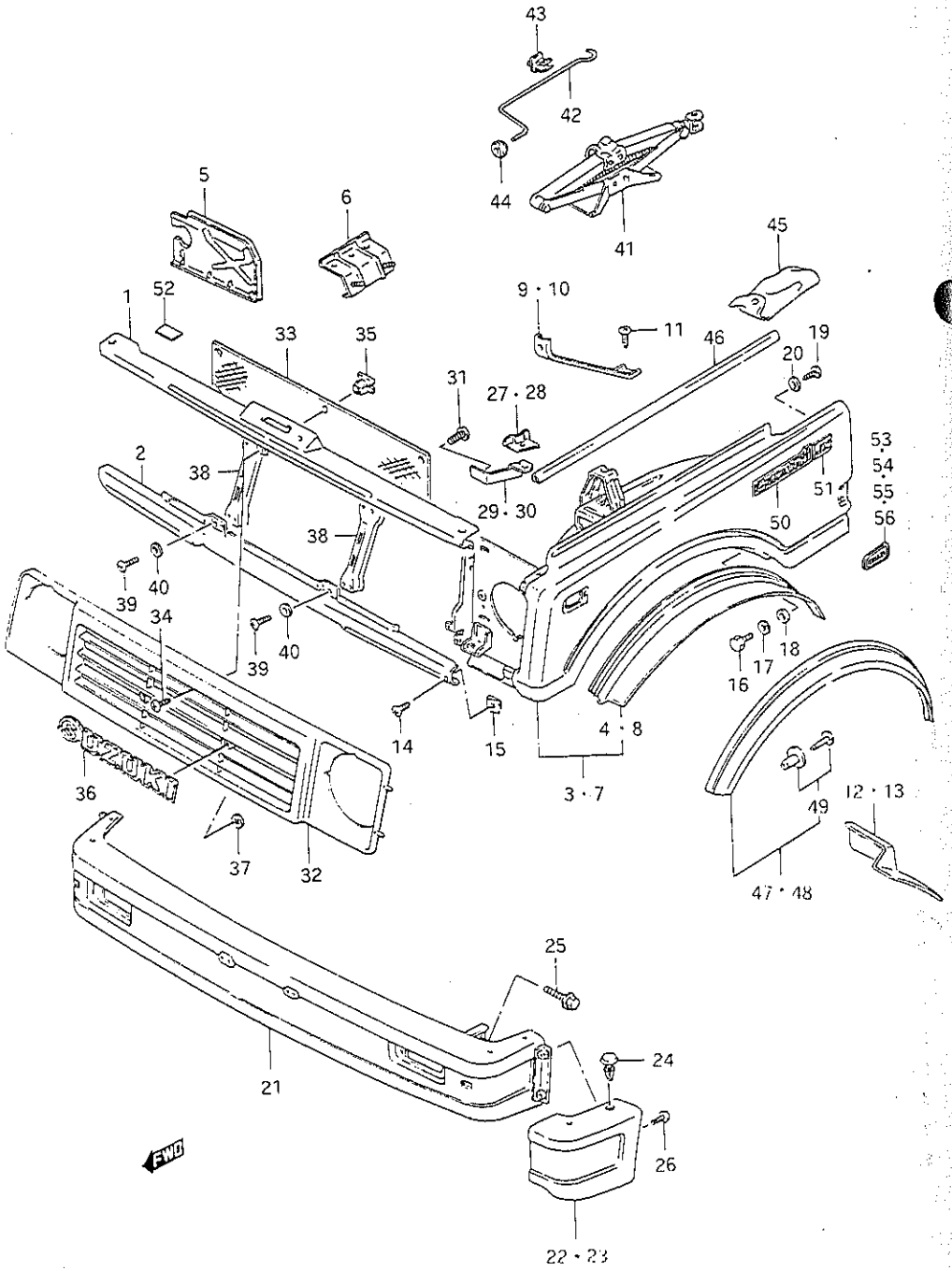

SJ413-4 E1

FIG.87 (2-A- 7) FRONT BODY

REF.NO.	PART NO.	DESCRIPTION	Q'TY Q/W	Q'TY V	REMARKS
32-1	72111-70A00-2DJ	GRILLE, front	1	1	
32-2	72111-70A00-2DE	GRILLE, front	1	1	
32-3	72111-70A00-2DH	GRILLE, front	1	1	
32-4	72111-70A00-8KJ	GRILLE, front	1	1	
32-5	72111-70A00-2DF	GRILLE, front	1	1	
32-6	72111-70A00-2DK	GRILLE, front	1	1	
32-7	72111-70A00-2DL	GRILLE, front	1	1	
32-8	72111-70A00-2DG	GRILLE, front	1	1	
32-9	72111-70A00-7HS	GRILLE, front	1	1	
32-10	72111-70A00-2DM	GRILLE, front	1	1	
32-11	72111-70A00-2JS	GRILLE, front	1	1	E49
33	72115-70A00	NET, front grille	1	1	
34	03242-05165	SCREW	5	5	
35	09148-05022	NUT	5	5	
36	77811-83000-8GS	EMBLEM, top	1	1	
37	09148-03003	NUT	2	2	
38	72411-70A00	MEMBER, front panel	2	2	
39	02112-06125	SCREW	8	8	
40	08322-21064	WASHER	8	8	
41	09824-00036	JACK ASSY	1	1	
42	09824-00035	HANDLE, jack	1	1	
43	09403-09309	CLAMP, jack handle	2	2	
44	09308-14006	GROMMET	1	1	
45	09800-53800	TOOL ASSY	1	1	
46	84646-80000	TRIM, front fender	2	2	E22,E39;L:2350→760

Combination Color	Color Name
2DJ (27G+291)	27G:Samoa Turquaise M/T
2DE (21L+291)	21L:Peruchet Red
2DH (20V+291)	20V:Gray M/T
8KJ (26U+291)	26U:Speria White
2DF (07B+291)	07B:Fantasy Black
2DK (24U+291)	24U:Worcester Blue
2DL (19H+291)	19H:Emerald Green
2DG (38C+291)	38C:Blue M/T
7HS (18J+291)	18J:Royal Wine Red
2DM (37T+291)	37T:Brown M/T
2JS (07T+291)	07T:Yellow
	291:Black

SJ413-4 E1

FIG.87

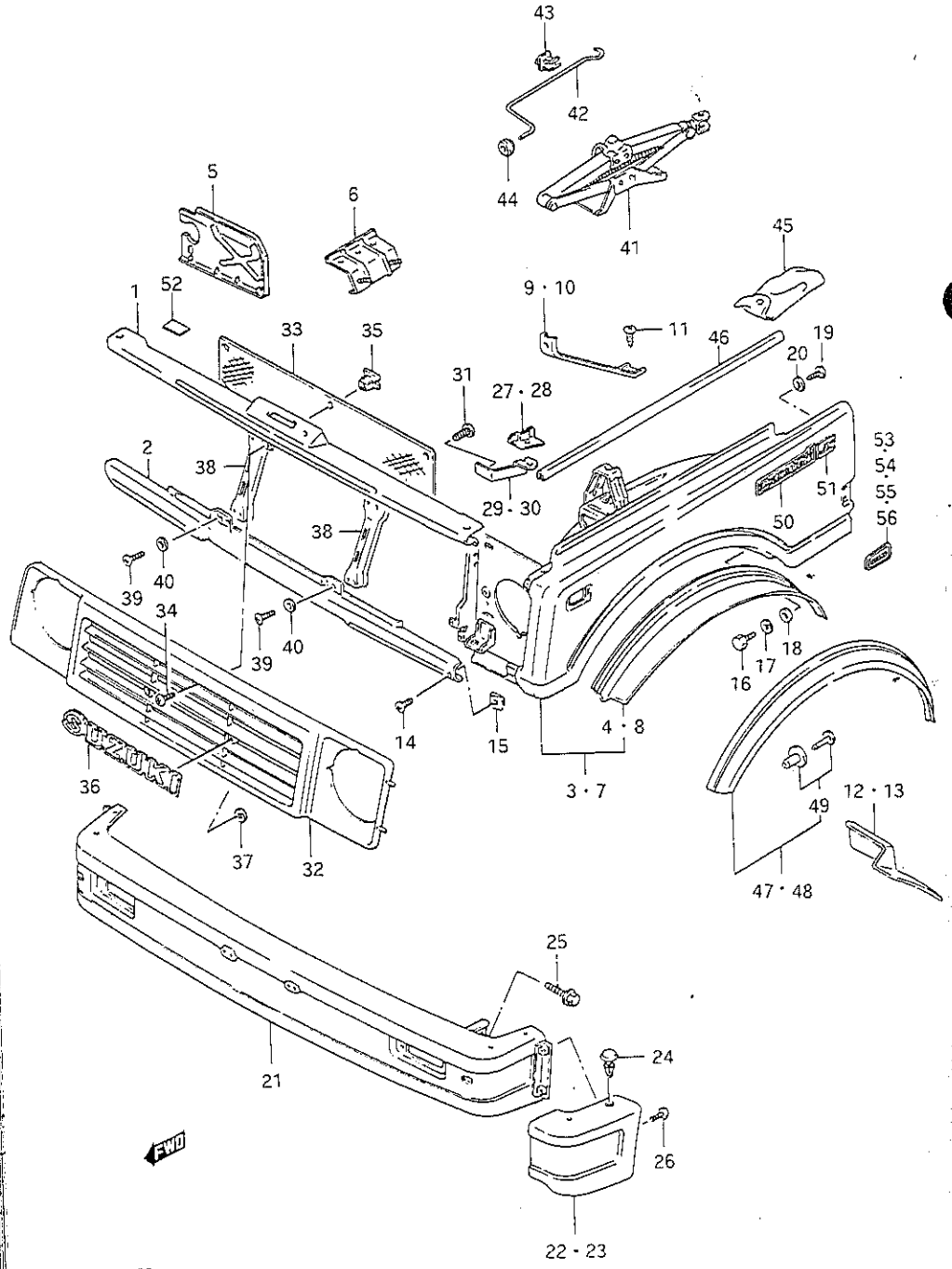

SJ413-4 E1

FIG.87 (2-A- 8) FRONT BODY

REF.NO.	PART NO.	DESCRIPTION	Q'TY Q/W	Q'TY V	REMARKS
47-1	77140-83812-21L	EXTENSION, body side RH	1	1	Peruchet Red
47-2	77140-83812-37T	EXTENSION, body side RH	1	1	Nova Brown Metallic
47-3	77140-83812-07B	EXTENSION, body side RH	1	1	Fantasy Black
47-4	77140-83812-18J	EXTENSION, body side RH	1	1	Crystal Silver Metallic
47-5	77140-83812-20V	EXTENSION, body side RH	1	1	Gray Metallic
47-6	77140-83812-26U	EXTENSION, body side RH	1	1	Superior White
47-7	77140-83812-24U	EXTENSION, body side RH	1	1	Worcester Blue Metallic
47-8	77140-83812-38C	EXTENSION, body side RH	1	1	Invierno Blue Metallic
47-9	77140-83812-27G	EXTENSION, body side RH	1	1	Samore Turquoise Metallic
47-10	77140-83812-19H	EXTENSION, body side RH	1	1	Yellow
48-1	77130-83812-21L	EXTENSION, body side LH	1	1	Peruchet Red
48-2	77130-83812-37T	EXTENSION, body side LH	1	1	Nova Brown Metallic
48-3	77130-83812-07B	EXTENSION, body side LH	1	1	Fantasy Black
48-4	77130-83812-18J	EXTENSION, body side LH	1	1	Crystal Silver Metallic
48-5	77130-83812-20V	EXTENSION, body side LH	1	1	Gray Metallic
48-6	77130-83812-26U	EXTENSION, body side LH	1	1	Superior White
48-7	77130-83812-24U	EXTENSION, body side LH	1	1	Worcester Blue Metallic
48-8	77130-83812-38C	EXTENSION, body side LH	1	1	Invierno Blue Metallic
48-9	77130-83812-27G	EXTENSION, body side LH	1	1	Samore Turquoise Metallic
48-10	77130-83812-19H	EXTENSION, body side LH	1	1	Yellow
49	09409-07312	.CLIP	12	12	
50	77815-83060	EMBLEM, side	2	2	
51	77819-83001	EMBLEM, JX	2	2	JX
52	72441-80002	FILM, hood cushion	2	2	

SJ413-4 E1

FIG. 87

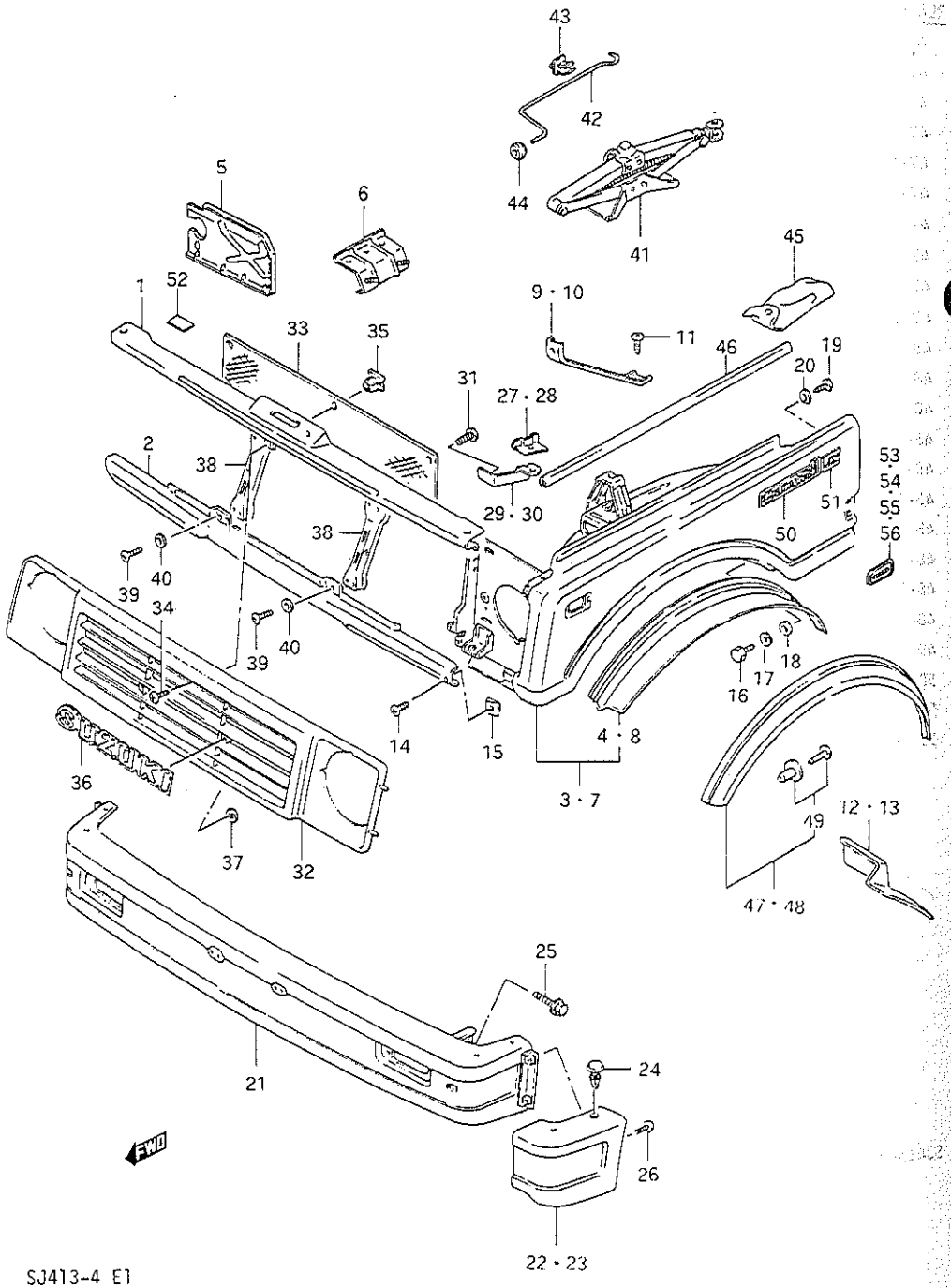

SJ413-4 E1

FIG.87 (2-A- 9) FRONT BODY

REF.NO.	PART NO.	DESCRIPTION	Q'TY Q/W	Q'TY V	REMARKS
53-1	77830-70A00-26U	GARNISH, fender RH (SAMURAI)	1	1	E2,E15,E16,E17,E18,E19, E22,E25,E34,E39,E41,E54, E68,E98
53-2	77830-70A00-21L	GARNISH, fender RH (SAMURAI)	1	1	E2,E15,E16,E17,E18,E19, E22,E25,E34,E39,E41,E54, E68,E98
53-3	77830-70A00-07B	GARNISH, fender RH (SAMURAI)	1	1	E2,E15,E16,E17,E18,E19, E22,E25,E34,E39,E41,E54, E68,E98
53-4	77830-70A00-38C	GARNISH, fender RH (SAMURAI)	1	1	E2,E15,E16,E17,E18,E19, E22,E25,E34,E39,E41,E54, E68,E98
53-5	77830-70A00-18J	GARNISH, fender RH (SAMURAI)	1	1	E2,E15,E16,E17,E18,E19, E22,E25,E34,E39,E41,E54, E68,E98
53-6	77830-70A00-20V	GARNISH, fender RH (SAMURAI)	1	1	E2,E15,E16,E17,E18,E19, E22,E25,E34,E39,E41,E54, E68,E98
53-7	77830-70A00-27G	GARNISH, fender RH (SAMURAI)	1	1	E2,E15,E16,E17,E18,E19, E22,E25,E34,E39,E41,E54, E68,E98
53-8	77830-70A00-24U	GARNISH, fender RH (SAMURAI)	1	1	E2,E15,E16,E17,E18,E19, E22,E25,E34,E39,E41,E54, E68,E98
53-9	77830-70A00-37T	GARNISH, fender RH (SAMURAI)	1	1	E2,E15,E16,E17,E18,E19, E22,E25,E34,E39,E41,E54, E68,E98
53-10	77830-70A00-19H	GARNISH, fender RH (SAMURAI)	1	1	E2,E15,E16,E17,E18,E19, E22,E25,E34,E39,E41,E54, E68,E98
54-1	77830-70A10-26U	GARNISH, fender RH (SUZUKI)	1	-	E6
54-2	77830-70A10-21L	GARNISH, fender RH (SUZUKI)	1	-	E6
54-3	77830-70A10-07B	GARNISH, fender RH (SUZUKI)	1	-	E6
54-4	77830-70A10-38C	GARNISH, fender RH (SUZUKI)	1	-	E6
54-5	77830-70A10-18J	GARNISH, fender RH (SUZUKI)	1	-	E6
54-6	77830-70A10-20V	GARNISH, fender RH (SUZUKI)	1	-	E6
54-7	77830-70A10-27G	GARNISH, fender RH (SUZUKI)	1	-	E6
54-8	77830-70A10-24U	GARNISH, fender RH (SUZUKI)	1	-	E6
54-9	77830-70A10-37T	GARNISH, fender RH (SUZUKI)	1	-	E6
54-10	77830-70A10-19H	GARNISH, fender RH (SUZUKI)	1	-	E6

SJ413-4 E1

FIG. 87

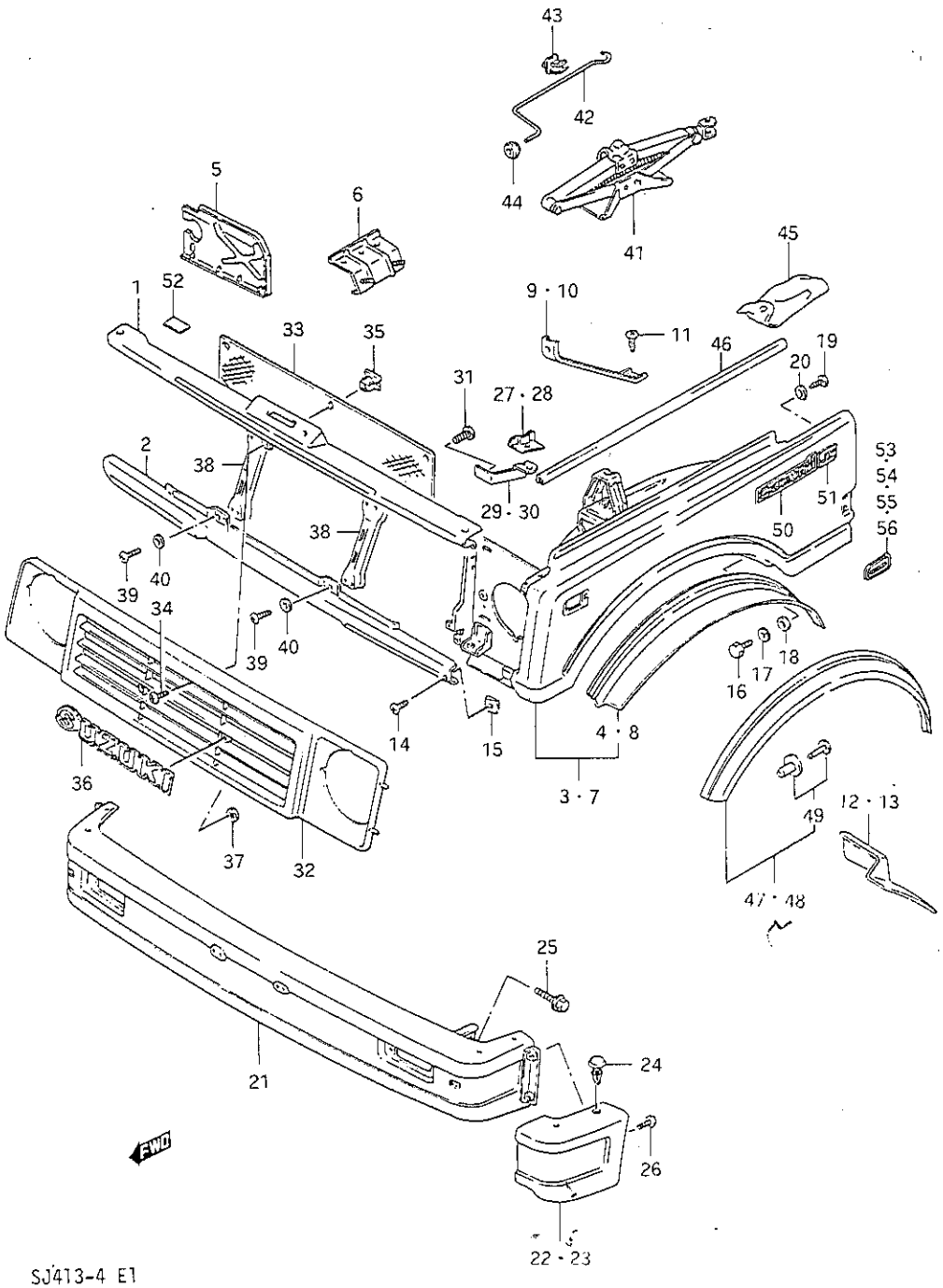

SJ413-4 E1

FIG.87 (2-A-10) FRONT BODY

REF.NO.	PART NO.	DESCRIPTION	Q'TY Q/W	Q'TY V	REMARKS
55-1	77840-70A00-26U	GARNISH, fender LH (SAMURAI)	1	1	E2,E15,E16,E17,E18,E19, E22,E25,E34,E39,E41,E54, E68,E98
55-2	77840-70A00-21L	GARNISH, fender LH (SAMURAI)	1	1	E2,E15,E16,E17,E18,E19, E22,E25,E34,E39,E41,E54, E68,E98
55-3	77840-70A00-07B	GARNISH, fender LH (SAMURAI)	1	1	E2,E15,E16,E17,E18,E19, E22,E25,E34,E39,E41,E54, E68,E98
55-4	77840-70A00-38C	GARNISH, fender LH (SAMURAI)	1	1	E2,E15,E16,E17,E18,E19, E22,E25,E34,E39,E41,E54, E68,E98
55-5	77840-70A00-18J	GARNISH, fender LH (SAMURAI)	1	1	E2,E15,E16,E17,E18,E19, E22,E25,E34,E39,E41,E54, E68,E98
55-6	77840-70A00-20V	GARNISH, fender LH (SAMURAI)	1	1	E2,E15,E16,E17,E18,E19, E22,E25,E34,E39,E41,E54, E68,E98
55-7	77840-70A00-27G	GARNISH, fender LH (SAMURAI)	1	1	E2,E15,E16,E17,E18,E19, E22,E25,E34,E39,E41,E54, E68,E98
55-8	77840-70A00-24U	GARNISH, fender LH (SAMURAI)	1	1	E2,E15,E16,E17,E18,E19, E22,E25,E34,E39,E41,E54, E68,E98
55-9	77840-70A00-37T	GARNISH, fender LH (SAMURAI)	1	1	E2,E15,E16,E17,E18,E19, E22,E25,E34,E39,E41,E54, E68,E98
55-10	77840-70A00-19H	GARNISH, fender LH (SAMURAI)	1	1	E2,E15,E16,E17,E18,E19, E22,E25,E34,E39,E41,E54, E68,E98
56-1	77840-70A10-26U	GARNISH, fender LH (SUZUKI)	1	-	E6
56-2	77840-70A10-21L	GARNISH, fender LH (SUZUKI)	1	-	E6
56-3	77840-70A10-07B	GARNISH, fender LH (SUZUKI)	1	-	E6
56-4	77840-70A10-38C	GARNISH, fender LH (SUZUKI)	1	-	E6
56-5	77840-70A10-18J	GARNISH, fender LH (SUZUKI)	1	-	E6
56-6	77840-70A10-20V	GARNISH, fender LH (SUZUKI)	1	-	E6
56-7	77840-70A10-27G	GARNISH, fender LH (SUZUKI)	1	-	E6
56-8	77840-70A10-24U	GARNISH, fender LH (SUZUKI)	1	-	E6
56-9	77840-70A10-37T	GARNISH, fender LH (SUZUKI)	1	-	E6
56-10	77840-70A10-19H	GARNISH, fender LH (SUZUKI)	1	-	E6

SJ413-4 E1

FIG.88

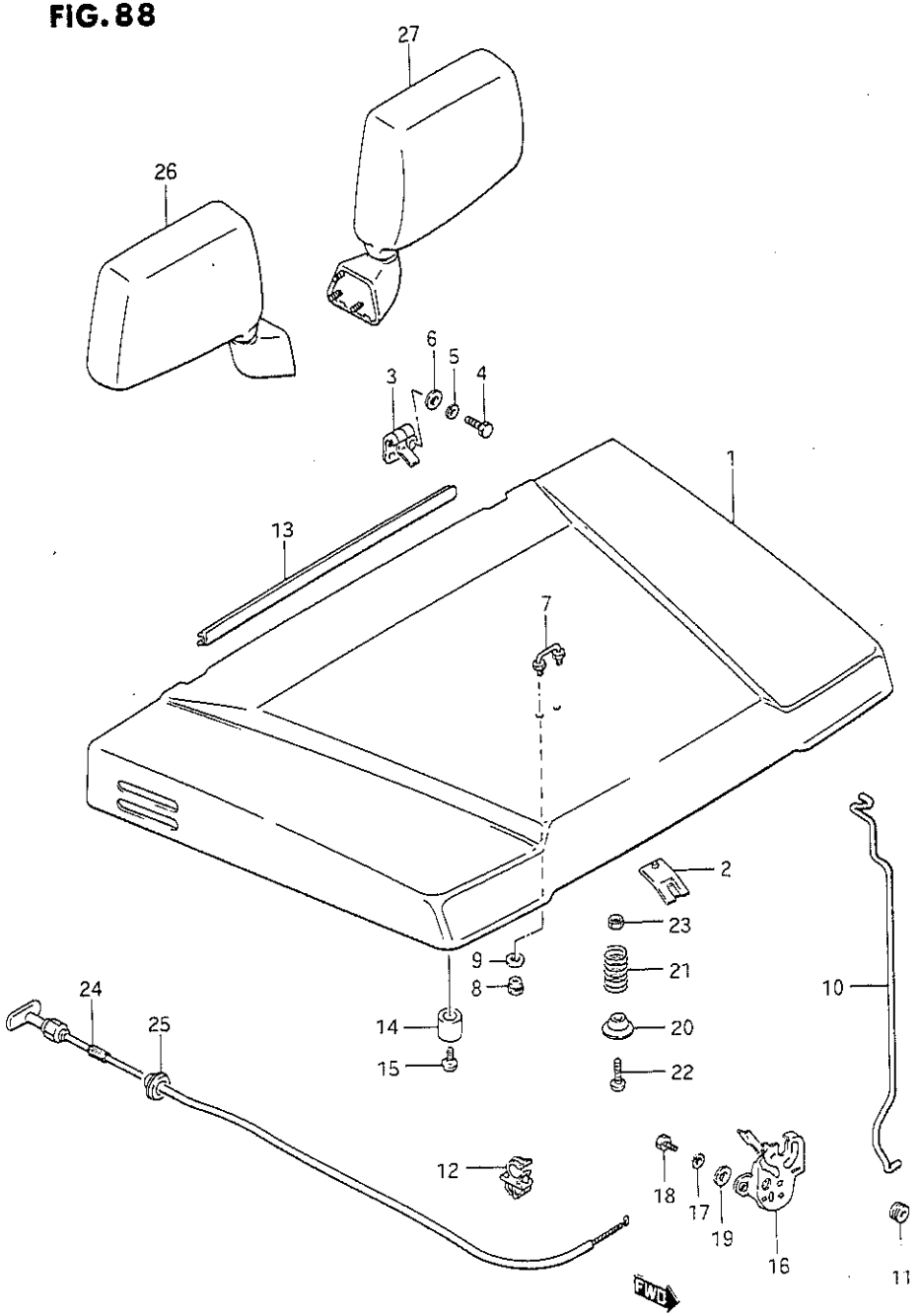

FIG.88 (2-A-11) FRONT HOOD

REF.NO.	PART NO.	DESCRIPTION	Q'TY Q/W	Q'TY V	REMARKS
1-1	58300-83001	PANEL ASSY, front hood	1	-	
1-2	58300-83100	PANEL ASSY, front hood	-	1	
2	58370-83000	.HOOK, hood lock	1	1	
3	58410-80010	.HINGE, hood	2	2	
4	01107-06167	BOLT	4	4	
5	08321-21067	LOCK WASHER	4	4	
6	09160-06019	WASHER (6.5x16x1.2)	4	4	
7	58380-80000	HOOK, window lock	1	-	
8	09159-06036	NUT	2	-	
9	09161-08006	WASHER	2	-	
10	72442-83002	STAY, front hood	1	1	
11	09308-09017	GROMMET	1	1	
12	09403-08313	CLAMP	1	1	
13	72464-80060	WEATHERSTRIP, hood	1	1	E22,E39
14	09320-06011	CUSHION, front	2	2	
15	02112-06163	SCREW	2	2	
16-1	82110-80013	LOCK, hood	1	1	LHD
16-2	82110-80003	LOCK, hood	1	1	RHD
17	08321-21067	LOCK WASHER	2	2	
18	09128-06031	SCREW	2	2	
19	09160-06028	WASHER (6.5x18x1)	2	2	
20	82171-80100	SUPPORT, open spring	1	1	
21	09440-27007	SPRING, open	1	1	
22	02112-06404	SCREW	1	1	
23	08310-11066	NUT	1	1	
24	82160-80010	CABLE, hood lock	1	1	
25	82191-82000	GROMMET	1	1	
26-1	84701-83000-281	MIRROR ASSY, RH	1	1	
26-2	84701-83010-281	MIRROR ASSY, RH	1	1	E2,E6,E15,E16, E17,E18,E19,E22,E25, E34,E39,E54,E68
27-1	84702-83000-281	MIRROR ASSY, LH	1	1	
27-2	84702-83010-281	MIRROR ASSY, LH	1	1	E2,E6,E15,E16, E17,E18,E19,E22,E25, E34,E39,E54,E68

SJ413-4 E1

FIG.89

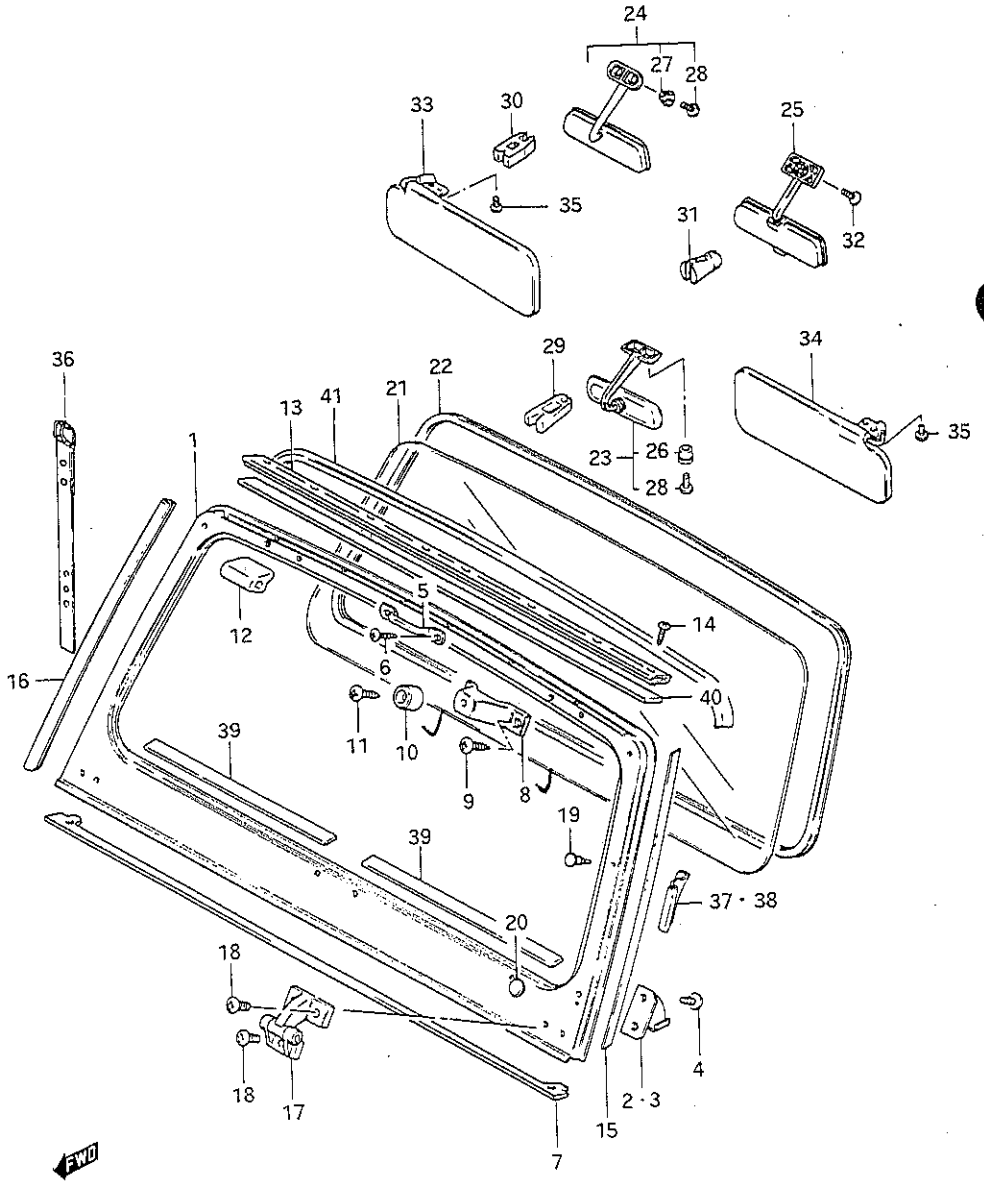

FIG.89 (2-A-12) FRONT WINDOW

REF.NO.	PART NO.	DESCRIPTION	Q'TY Q/W	Q'TY V	REMARKS
1-1	59101-80024	PANEL ASSY, front window	1	-	LHD
1-2	59101-80004	PANEL ASSY, front window	1	-	RHD
2	72411-80000	STAY, window lock RH	1	-	
3	72412-80000	STAY, window lock LH	1	-	
4	02142-06164	SCREW	4	-	
5	72415-80000	HOOK, window stopper	1	-	
6	02112-05103	SCREW	2	-	
7	72413-83000	WEATHERSTRIP, windshield	1	-	
	72414-80000	BRACKET, window cushion	2	-	
9	03211-05163	SCREW	4	-	
	09320-06006	CUSHION, window	2	-	
11	03211-06163	SCREW	2	-	
12	78142-80101	CUSHION, front hood	-	1	
13	72418-80003	GARNISH, window upper	1	-	
14	03111-05203	SCREW	8	-	
15	84644-80001	SEAL, window side	2	-	
16	72461-80000	OPENING TRIM, window	2	-	E2,E6,E15,E16,E17,E18, E19,E22,E25,E34,E39, E54,E68
17	72420-80010	HINGE, window	2	-	
18	09125-06022	SCREW	6	-	
19	09250-02001	CAP, antenna hole	2	2	N/car radio
20	09250-14003	CAP, antenna hole	1	1	N/car radio
21-1	84511-80111	GLASS, windshield (Clear)	1	1	
21-2	84511-80101	GLASS, windshield (Tinted)	1	1	
21-3	84511-80132	GLASS, windshield (Clear)	1	1	E2,E6,E14,E15,E16, E17,E18,E19,E20,E22, E25,E27,E34,E39,E43, E44,E49,E54,E68,E94
21-4	84511-80122	GLASS, windshield (Tinted)	1	1	E2,E6,E14,E15,E16, E17,E18,E19,E20,E22, E25,E27,E34,E39,E43, E44,E49,E54,E68,E94
22	84611-80100	WEATHERSTRIP, windshield	1	1	

FIG. 89

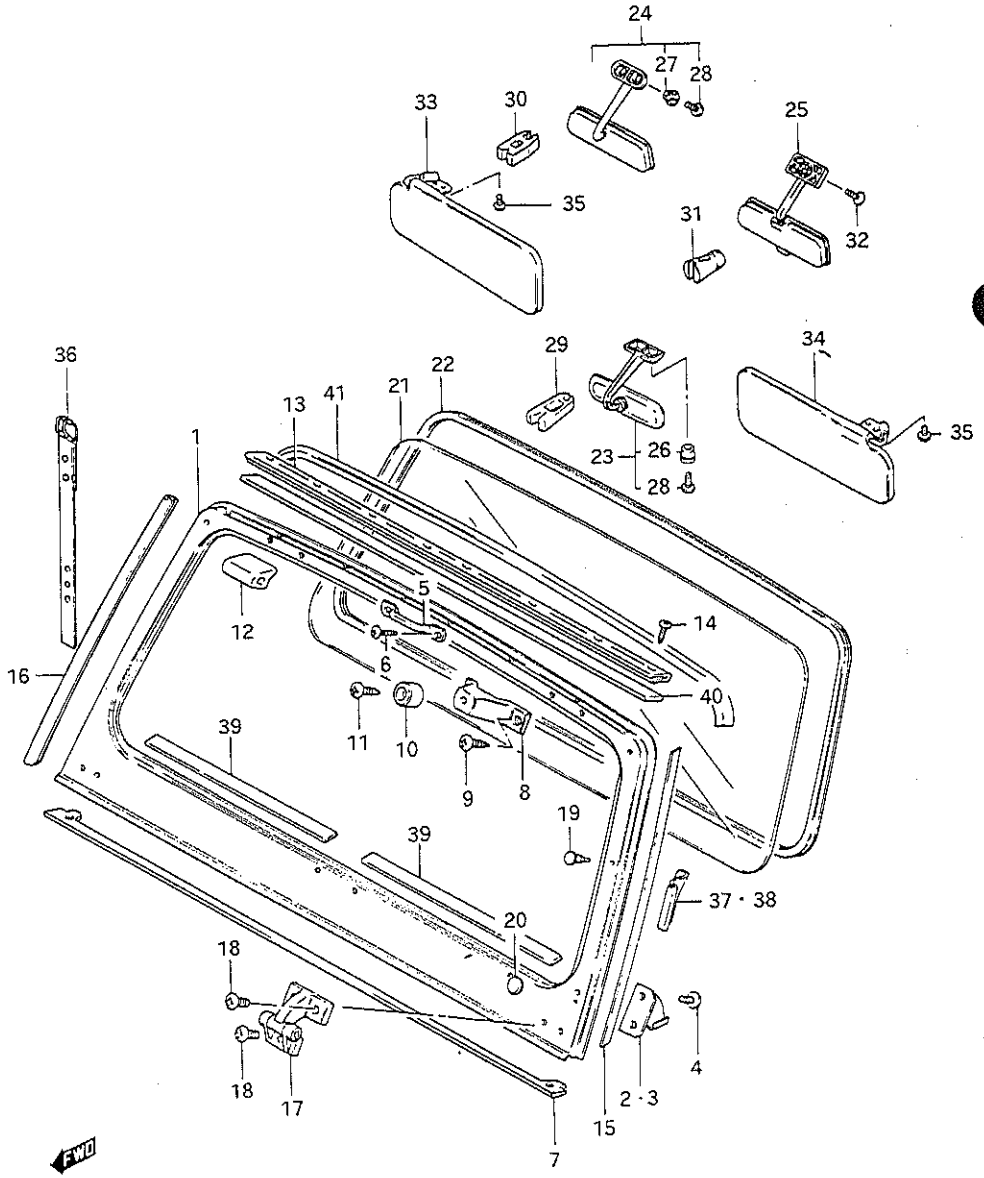

FIG.89 (2-A-13) FRONT WINDOW

REF.NO.	PART NO.	DESCRIPTION	Q'TY Q/W	Q'TY V	REMARKS
23	86103-63010	MIRROR ASSY, inside	1	1	
24	86103-73020	MIRROR ASSY, inside	1	1	E2,E6,E15,E16,E17,E18, E19,E22,E25,E34,E39, E54,E68
25	84703-80000	MIRROR ASSY, inside	1	1	JX
26	86124-63010	.WASHER	2	2	
27	86124-73020	.WASHER	2	2	E2,E6,E15,E16,E17,E18, E19,E22,E25,E34,E39, E54,E68
28	02112-05125	.SCREW	2	2	
29	86169-78400	SUPPORT, mirror	1	1	E2,E6,E15,E16,E17,E18, E19,E22,E25,E34,E39, E54,E68
30	86169-79000	SUPPORT, mirror	1	-	JX
31	84781-80000	SUPPORT, mirror	-	1	JX
32	02142-05128	SCREW	2	2	JX
33-1	84800-80830-46Z	SUNVISOR ASSY, RH	1	-	JA
33-2	84800-83860-46Z	SUNVISOR ASSY, RH	1	-	LHD:JX
33-3	84800-80830-46Z	SUNVISOR ASSY, RH	1	-	RHD:JX
33-4	84800-83810-46Z	SUNVISOR ASSY, RH	1	-	E27
33-5	84800-83860-4KJ	SUNVISOR ASSY, RH	1	-	LHD,W/resin top
33-6	84800-80830-4KJ	SUNVISOR ASSY, RH	1	-	RHD,W/resin top
33-7	84800-80830-4KJ	SUNVISOR ASSY, RH	-	1	JA
33-8	84800-83860-4KJ	SUNVISOR ASSY, RH	-	1	LHD:JX
33-9	84800-80830-4KJ	SUNVISOR ASSY, RH	-	1	RHD:JX
33-10	84800-83810-4KJ	SUNVISOR ASSY, RH	-	1	E27
33-11	84800-83860-4KJ	SUNVISOR ASSY, RH	-	1	LHD,high roof
33-12	84800-80830-4KJ	SUNVISOR ASSY, RH	-	1	RHD,high roof

SJ413-4 E1

FIG.89

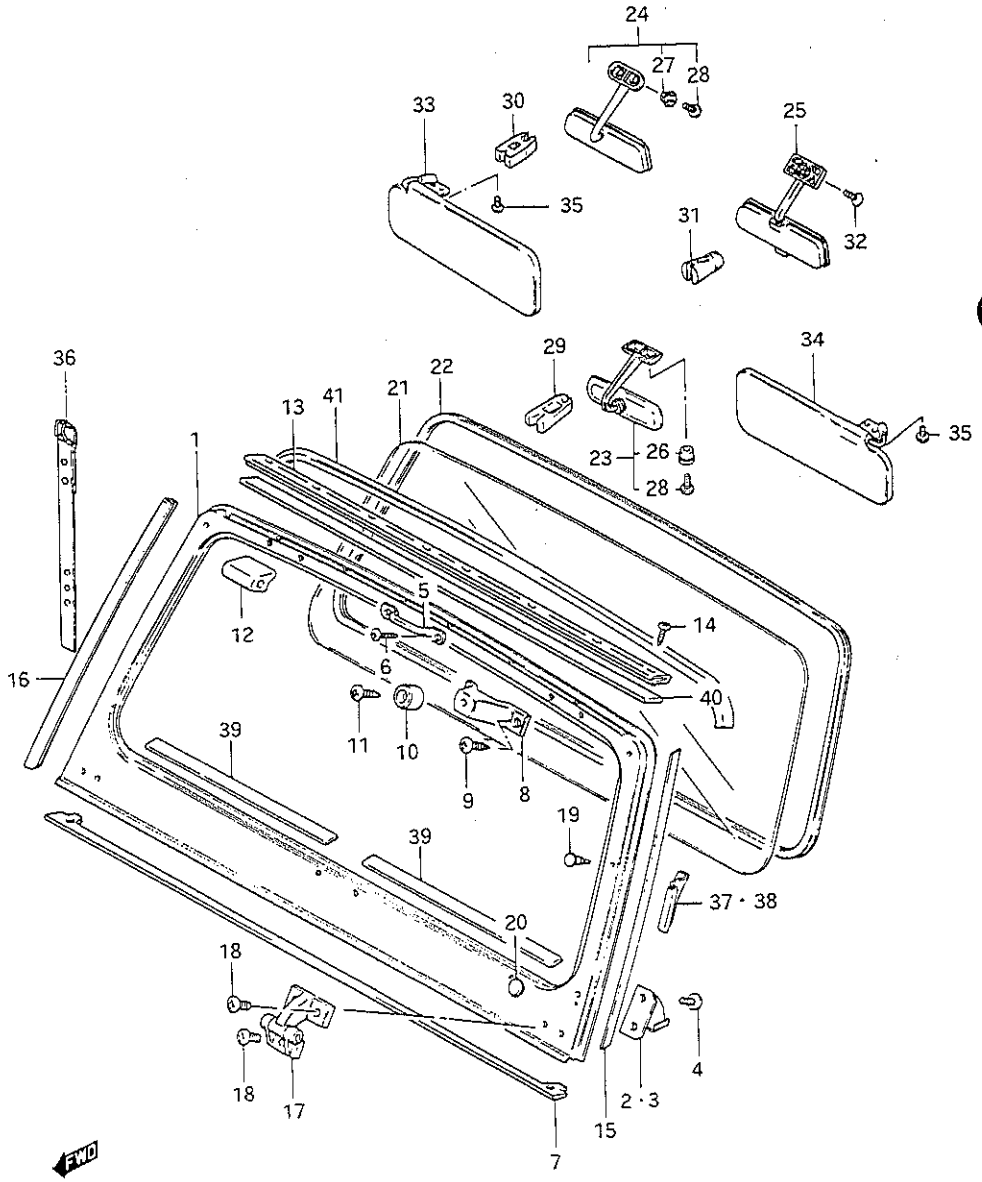

FIG.89 (2-A-14) FRONT WINDOW

REF.NO.	PART NO.	DESCRIPTION	Q'TY Q/W	Q'TY V	REMARKS
34-1	84800-80840-46Z	SUNVISOR ASSY, LH	1	-	JA
34-2	84800-80840-46Z	SUNVISOR ASSY, LH	1	-	LHD:JX
34-3	84800-83870-46Z	SUNFISOR ASSY, LH	1	-	RHD:JX
34-4	84800-83820-46Z	SUNVISOR ASSY, LH	1	-	E27
34-5	84800-80840-4KJ	SUNFISOR ASSY, LH	1	-	LHD,W/resin top
34-6	84800-83870-4KJ	SUNVISOR ASSY, LH	1	-	RHD,W/resin top
34-7	84800-80840-4KJ	SUNVISOR ASSY, LH	-	1	JA
34-8	84800-83870-4KJ	SUNVISOR ASSY, LH	-	1	RHD:JX
34-9	84800-80840-4KJ	SUNVISOR ASSY, LH	-	1	LHD:JX
34-10	84800-83820-4KJ	SUNVISOR ASSY, LH	-	1	E27
34-11	84800-80840-4KJ	SUNVISOR ASSY, LH	-	1	LHD,high roof
34-12	84800-83870-4KJ	SUNVISOR ASSY, LH	-	1	RHD,high roof
35	02132-05105	.SCREW	4	4	
36	72450-80001	BELT, front window	2	-	
37	84648-80011	GARNISH, window RH	1	-	
38	84649-80011	GARNISH, window LH	1	-	
39	72416-83000	SHEET, FR window rear lower	2	-	
40	72419-83010	PAD, wingow garnish	1	-	
41	72462-83000	WEATHERSTRIP, FR window upper	1	-	

FIG.90

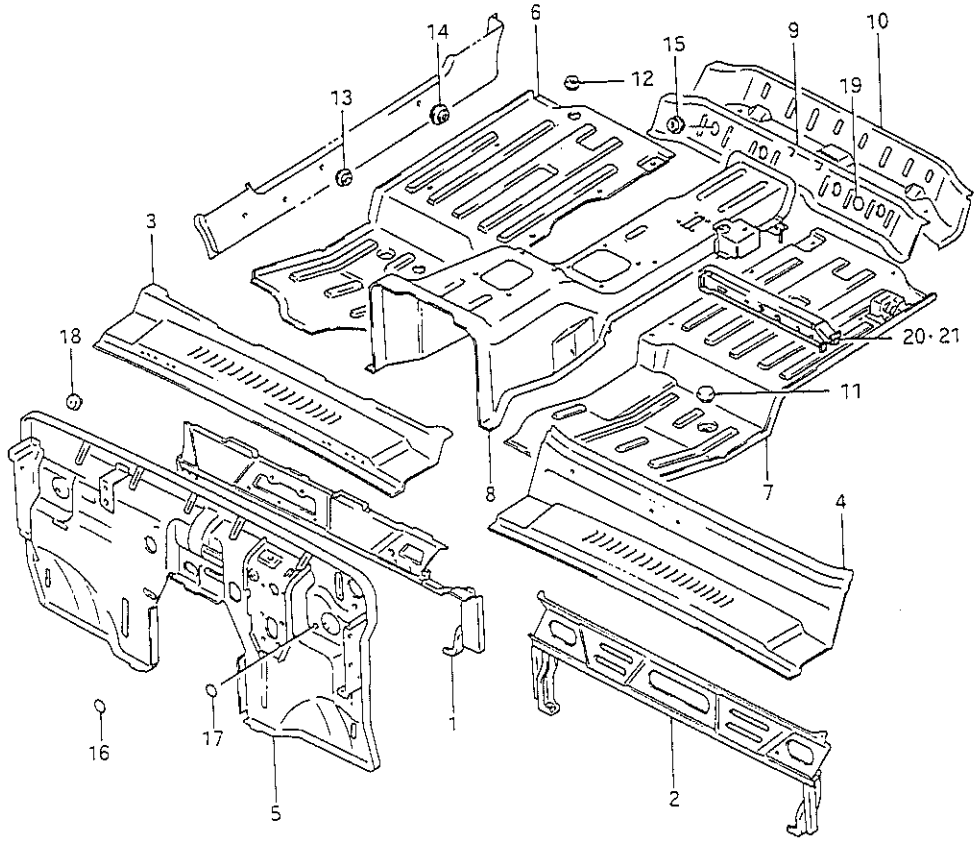

FIG.90 (2-A-15) CENTER PANEL

REF.NO.	PART NO.	DESCRIPTION	Q'TY Q/W	Q'TY V	REMARKS
1-1	59600-83011	PANEL ASSY, cowl upper rear	1	-	LHD
1-2	59600-83001	PANEL ASSY, cowl upper rear	1	-	RHD
2-1	59600-83131	PANEL ASSY, cowl upper rear	-	1	LHD
2-2	59600-83121	PANEL ASSY, cowl upper rear	-	1	RHD
3	59300-83001	PANEL ASSY, cowl upper	1	-	
4-1	59300-80142	PANEL ASSY, cowl upper	-	1	LHD
4-2	59300-80102	PANEL ASSY, cowl upper	-	1	RHD
5-1	61100-83021	PANEL, dash	1	-	LHD
5-2	61100-83090	PANEL, dash	-	1	LHD
5-3	61100-83040	PANEL, dash	1	-	RHD
5-4	61100-83070	PANEL, dash	-	1	RHD
5-5	61100-83310	PANEL, dash	1	1	E17,E18,E39
5-6	61100-83090	PANEL, dash	1	1	E43
6-1	61400-83040	PANEL, floor RH	1	1	LHD
6-2	61400-83020	PANEL, floor RH	1	1	RHD
7-1	61500-83010	PANEL, floor LH	1	1	LHD
7-2	61500-83020	PANEL, floor LH	1	1	RHD
8-1	61600-70A10	PANEL, tunnel	1	1	LHD
8-2	61600-70A00	PANEL, tunnel	1	1	RHD
8-3	61600-70A50	PANEL, tunnel	1	1	E14:W/PTO
8-4	61600-70A20	PANEL, tunnel	1	1	E15:W/PTO
9-1	61810-83030	MEMBER, floor No.1	1	1	
9-2	61810-83040	MEMBER, floor No.1	1	1	separate seat
10-1	61820-83010	MEMBER, floor No.2	1	1	
10-2	61820-83000	MEMBER, floor No.2	1	-	E20
10-3	61820-83000	MEMBER, floor No.2	1	-	W:F
10-4	61820-83010	MEMBER, floor No.2	1	-	W:F,E14,E19,E25,E39
11	09250-40002	CAP, front	4	4	
12	09250-30002	CAP, rear	2	2	
13	09250-20015	CAP, sill side hole front	5	5	
14	09250-25007	CAP, sill side hole rear	2	2	
15	09250-20015	CAP, member center floor No.1	4	4	

FIG.90

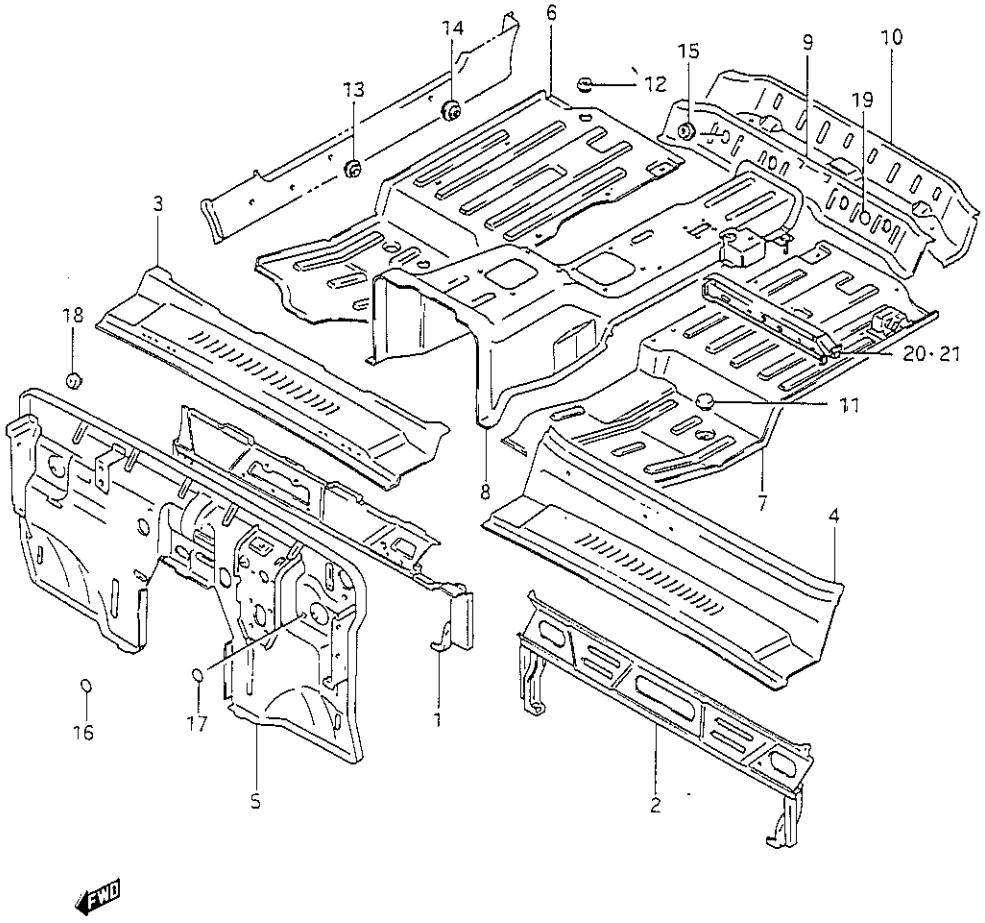

FIG.90 (2-A-16) CENTER PANEL

REF.NO.	PART NO.	DESCRIPTION	Q'TY Q/W	Q'TY V	REMARKS
16	67627-70000	FILM, dash	1	1	
17	67627-70000	FILM, canister hole	1	1	
18	09250-20011	CAP, heater control hole	1	1	N/heater
19	67627-70000	FILM, member center floor No.1	4	4	
20	61550-80001	MEMBER, front seat LH	1	1	LHD
21	61450-80001	MEMBER, front seat RH	1	1	RHD

SJ413-4 E1

FIG.91

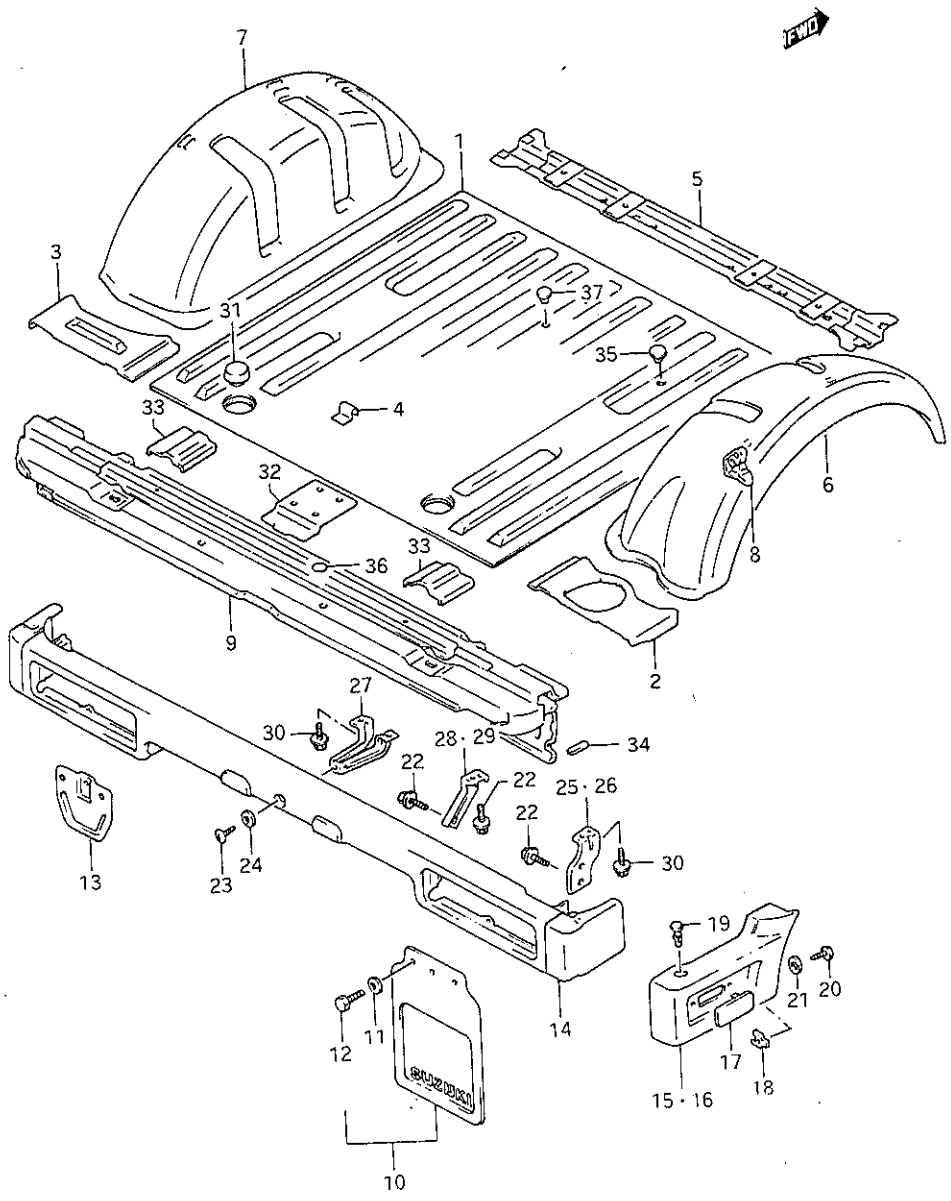

FIG.91 (2-B- 2) REAR BODY (Q,V)

REF.NO.	PART NO.	DESCRIPTION	Q'TY Q	Q'TY V	REMARKS
1-1	62111-83020	PANEL, rear floor	1	1	W/bench seat
1-2	62111-83090	PANEL, rear floor	1	1	W/separate seat
1-3	62111-80001	PANEL, rear floor	1	1	E2,E6,E15,E16,E17, E18,E19,E22,E25,E34, E39,E44,E54,E68
2	62112-80000	PANEL, floor side RH	1	1	
3	62113-80000	PANEL, floor side LH	1	1	
4	73722-63001	HOOK, stopper band	1	1	
5	62120-83301	REINFORCEMENT, floor	1	1	
6	62210-80002	PANEL, wheel housing RH	1	1	
7	62311-80002	PANEL, wheel housing LH	1	1	
8	62212-80000	BRACKET, inlet pipe	1	1	
9-1	62500-70A00	MEMBER, RR floor tail	1	1	JA
9-2	62500-70A10	MEMBER, RR floor tail	1	1	JX
9-3	62500-70A20	MEMBER, RR floor tail	1	1	E2,E6,E15,E16,E17, E18,E19,E22,E25,E34, E39,E54,E68 W/bench seat
9-4	62500-70A30	MEMBER, RR floor tail	1	1	E2,E6,E15,E16,E17, E18,E19,E22,E25,E34, E39,E68 W/separate seat
10	57600-80851	FLAP SET, mud	1	1	
11	09160-06077	.WASHER (6.5x20x1.2)	4	4	
12	01107-06123	.BOLT	4	4	
13	72272-80000	EXTENSION, mud flap LH	1	1	
14	71810-83301-[illegible]	BUMPER, rear	1	1	
15	71831-83301	PROTECTOR, bumper corner RH	1	1	
16	71832-83301	PROTECTOR, bumper corner LH	1	1	
17	71833-70A10	CAP, PROTECTOR	2	2	
18	09148-05013	NUT, protector	4	4	
19	09409-07311	CLIP	4	4	
20	09132-05029	SCREW	4	4	
21	08322-21053	WASHER	4	4	
22	01517-06123	BOLT	6	6	
23	09125-06022	SCREW	1	1	
24	09161-06008	WASHER	1	1	

SJ413-4 E1

FIG.91

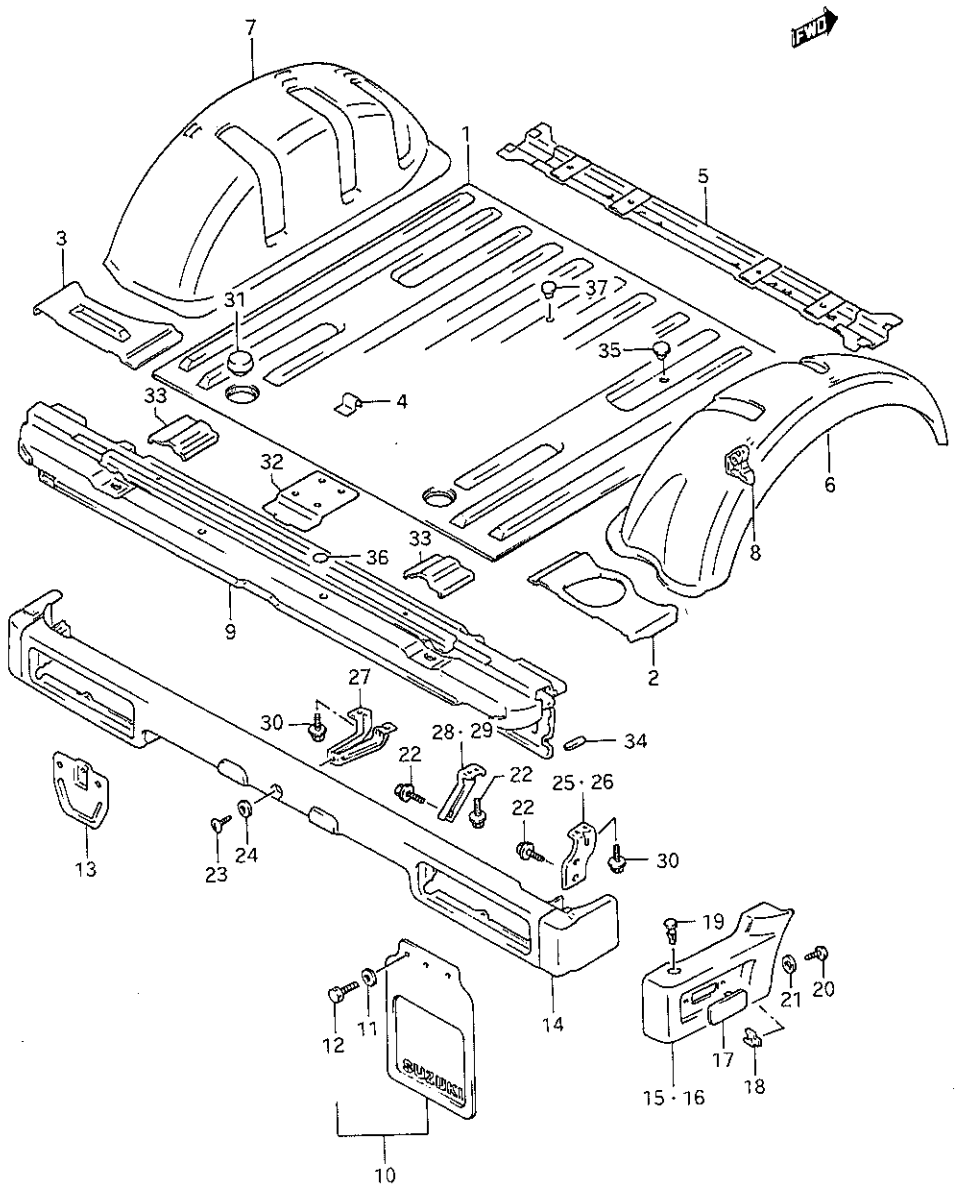

FIG.91 (2-B- 3) REAR BODY (Q,V)

REF.NO.	PART NO.	DESCRIPTION	Q'TY Q	Q'TY V	REMARKS
25	71821-80300	BRACKET, bumper side RH	1	1	
26	71822-80300	BRACKET, bumper side LH	1	1	
27	71823-83301	BRACKET, center	1	1	
28	71824-83300	BRACKET, bumper middle RH	1	1	
29	71825-83300	BRACKET, bumper middle LH	1	1	
30	01517-06123	BOLT	10	10	
31	09250-40004	CAP, rear floor	2	2	
32	62115-80070	REINF, rear seat striker	1	1	
33	62114-83001	REINF, rear seat cushion	2	2	
34	72876-80000	SEAL, tail member corner	2	2	
35	09250-08015	PLUG, rear seat hole	2	2	
36	67627-70000	FILM, member tail	2	2	
37	09250-06010	CAP, floor mat hook	3	3	

SJ413-4 E1

FIG.92

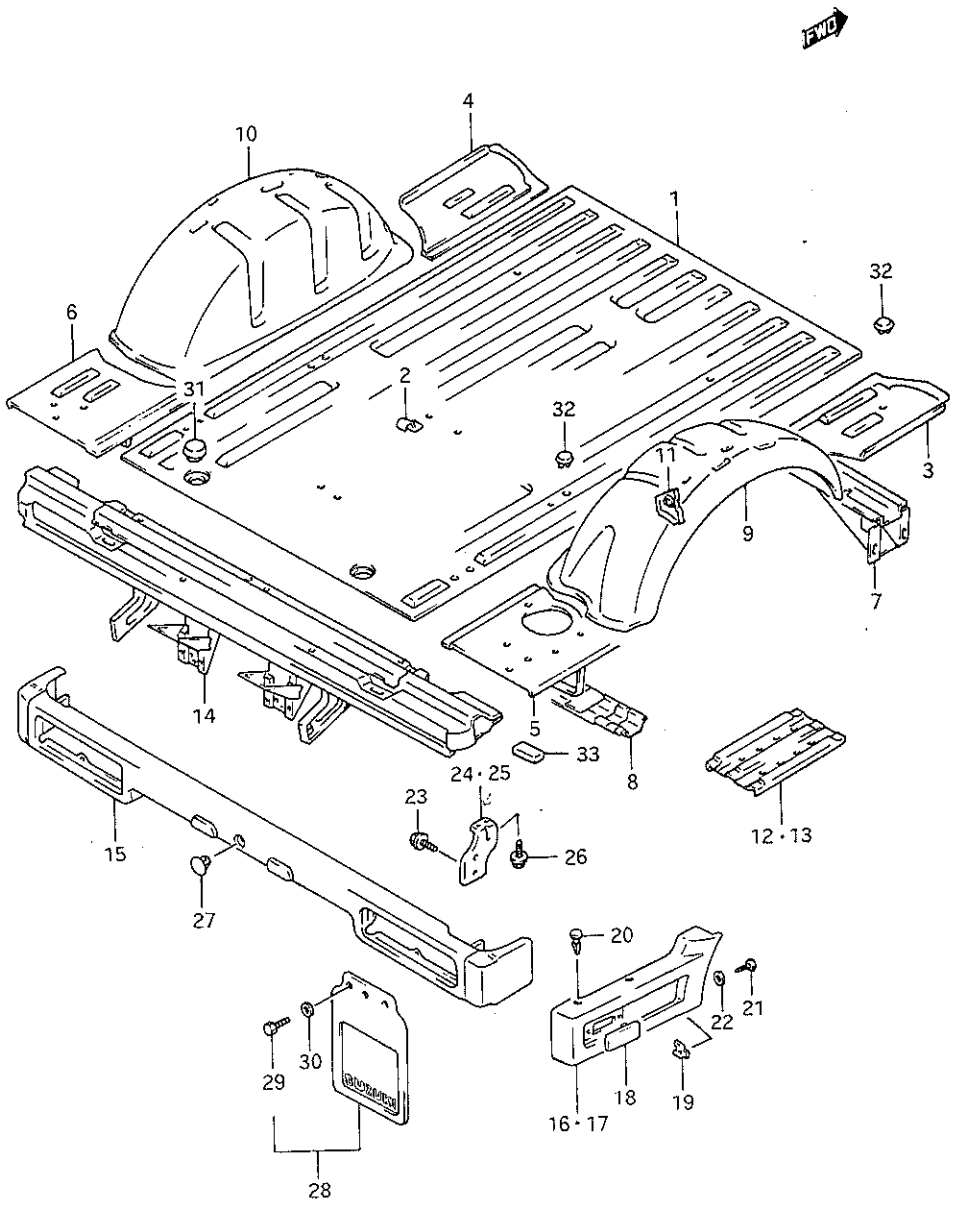

FIG.92 (2-B- 4) REAR BODY (W)

REF.NO.	PART NO.	DESCRIPTION	Q'TY W	REMARKS
1-1	62110-83360	PANEL, rear floor	1	C:JA
1-2	62110-83400	PANEL, rear floor	1	C:JX
1-3	62110-83420	PANEL, rear floor	1	F:JX,W/resin top
1-4	62110-83380	PANEL, rear floor	1	C:E44(JA)
1-5	62110-83410	PANEL, rear floor	1	E44(JX),W/resin top 4 persons
1-6	62110-83370	PANEL, rear floor	1	E2,E6,E15,E16,E17,E18,E19, E22,E25,E34,E39,E54
1-7	62110-83350	PANEL, rear floor	1	F:JA
2	73722-63001	.HOOK, seat stopper band	2	C
3-1	62120-80321	PANEL, side front RH	1	
3-2	62120-83290	PANEL, side front RH	1	4 persons
4-1	62130-80321	PANEL, side front LH	1	
4-2	62130-83290	PANEL, side front LH	1	4 persons
5-1	62140-80300	PANEL, side rear RH	1	
5-2	62140-83290	PANEL, side rear RH	1	4 persons
6	62150-83290	PANEL, side rear LH	1	
7	62160-83210	REINFORCEMENT, No.1	1	
8-1	62180-83211	REINFORCEMENT, No.3	1	
8-2	62180-83200	REINFORCEMENT, No.3	1	E2,E6,E15,E17,E18,E19,E22, E25,E34,E39,E54
9	62210-80002	PANEL, wheel housing RH	1	
10	62311-80002	PANEL, wheel housing LH	1	
11	62212-80000	BRACKET, inlet pipe	1	
12	62191-83210	REINF, rear seat RH	1	
13	62192-83210	REINF, rear seat LH	1	
14	62500-80310	TAILMEMBER, floor	1	

FIG.92

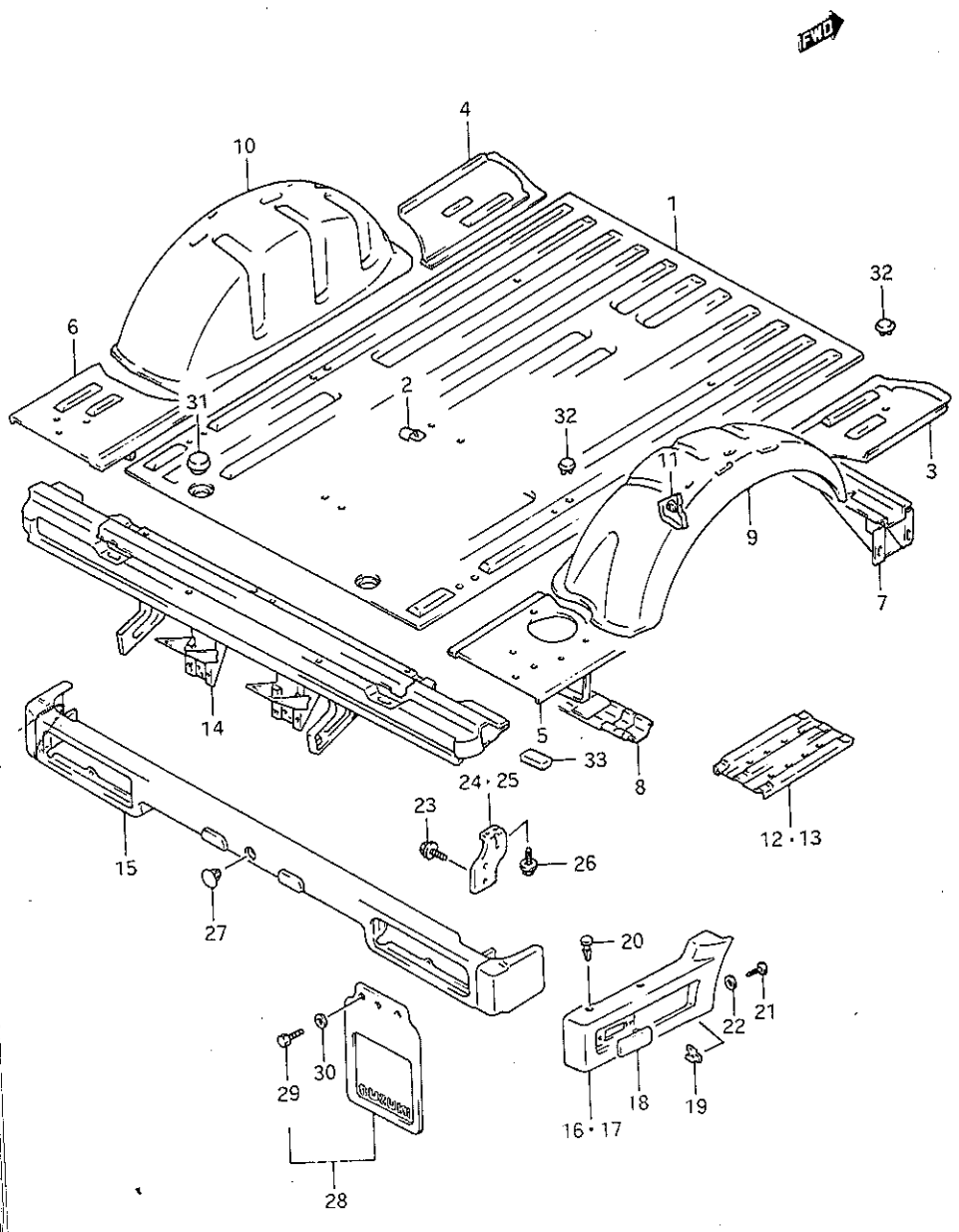

FIG.92 (2-B- 5) REAR BODY (W)

REF.NO.	PART NO.	DESCRIPTION	Q'TY W	REMARKS
15	71810-83301-162	BUMPER, rear	1	
16	71831-83310	PROTECTOR, bumper corner RH	1	
17	71832-83310	PROTECTOR, bumper corner LH	1	
18	71833-70A10	CAP, protector	2	
19	09148-05013	NUT, protector	4	
20	09409-07311	CLIP	6	
21	09132-05029	SCREW	4	
22	08322-21053	WASHER	4	
23	01517-06123	BOLT	4	
24	71821-80300	BRACKET, bumper side RH	1	
25	71822-80300	BRACKET, bumper side LH	1	
26	01517-06123	BOLT	4	
27	09409-09303	CAP, bumper center	1	
28	57600-80813	FLAP SET, rear	1	
29	01107-06126	.BOLT	4	
30	09160-06027	.WASHER (6.5x20x1.2)	4	
31	09250-40002	CAP, rear floor	2	
32	09409-09303	CAP	4	C
33	72876-80000	SEAL, tail member corner	2	

SJ413-4 E1

FIG.93

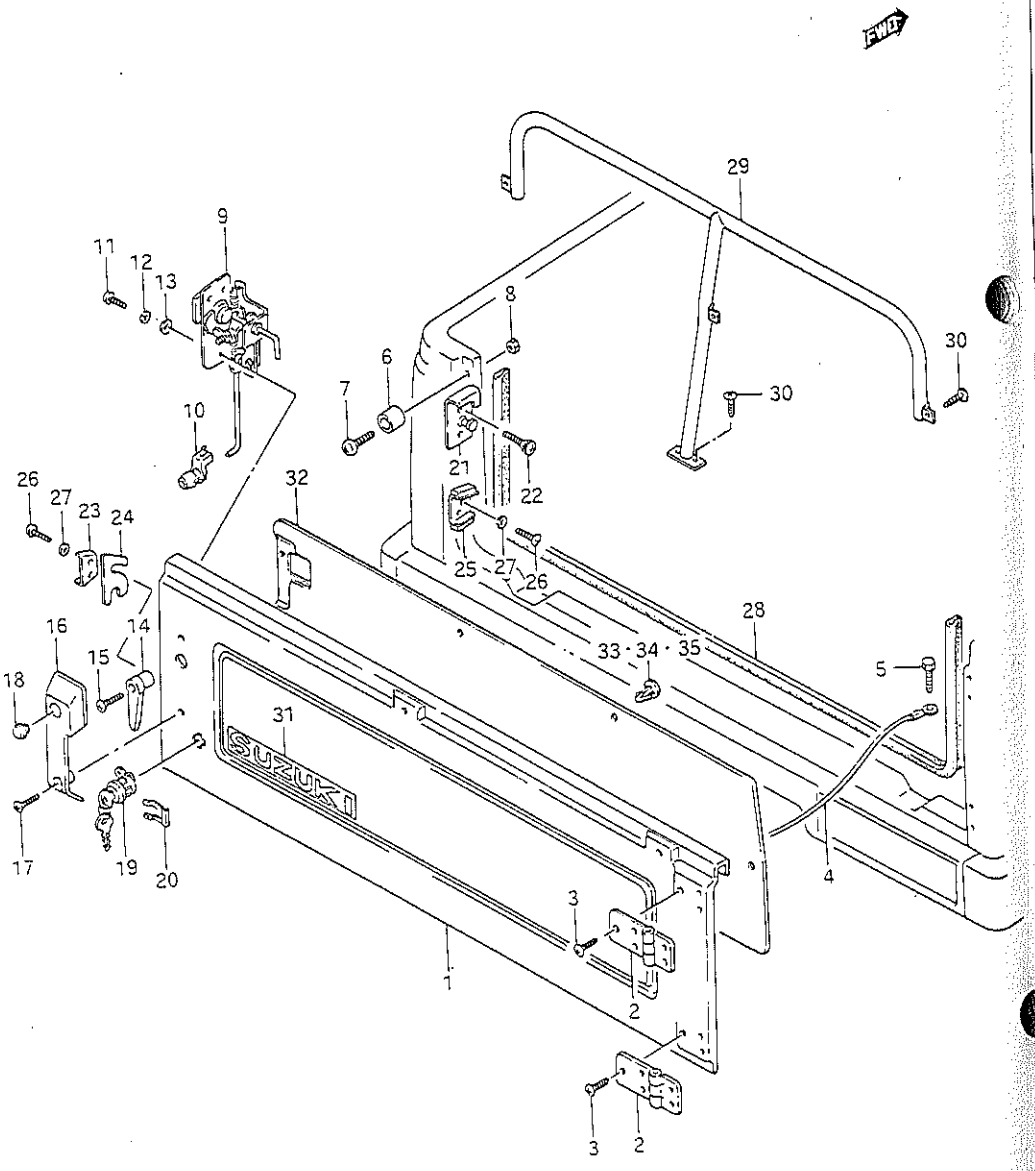

FIG.93 (2-B- 6) REAR GATE (Q,W)

REF.NO.	PART NO.	DESCRIPTION	Q'TY Q/W	REMARKS
1-1	67700-80060	PANEL ASSY, rear gate	1	Q
1-2	67700-83020	PANEL ASSY, rear gate	1	W:C
1-3	67700-83300	PANEL ASSY, rear gate	1	W:F
1-4	67700-80360	PANEL ASSY, rear gate	1	W:E43
1-5	67700-83020	PANEL ASSY, rear gate	1	W:F E19,E25,E39,E49
2	67790-80033	HINGE, gate	2	
3	09125-08002	SCREW	10	
4	72850-80002	CABLE, gate	1	
5	09100-06075	BOLT (6x14)	2	
6	72875-80003	CUSHION, gate	1	
7	02112-06163	SCREW	1	
8	08313-11063	NUT	1	
9	82550-80082	LOCK ASSY, gate side	1	
10	09209-05016	PIN, cylinder rod	1	
11	02112-06128	SCREW	3	
12	08321-21067	LOCK WASHER	3	
13	08322-21067	WASHER	3	
14	82591-80060	HANDLE, lock	1	
15	02112-06125	SCREW	1	
16	82592-80060	COVER, gate handle	1	
17	02112-06125	SCREW	2	
18	09250-14006	CAP	1	
19	77400-70812	CYLINDER ASSY, rear gate	1	
20	77461-80080	CLIP	1	
21	77810-60021	STRIKER, gate lock	1	
22	09137-08006	SCREW	2	
23	78251-68201	STOP MALE, gate	1	
24	77891-63100	SPACER, stop male	0-2	

FIG.93

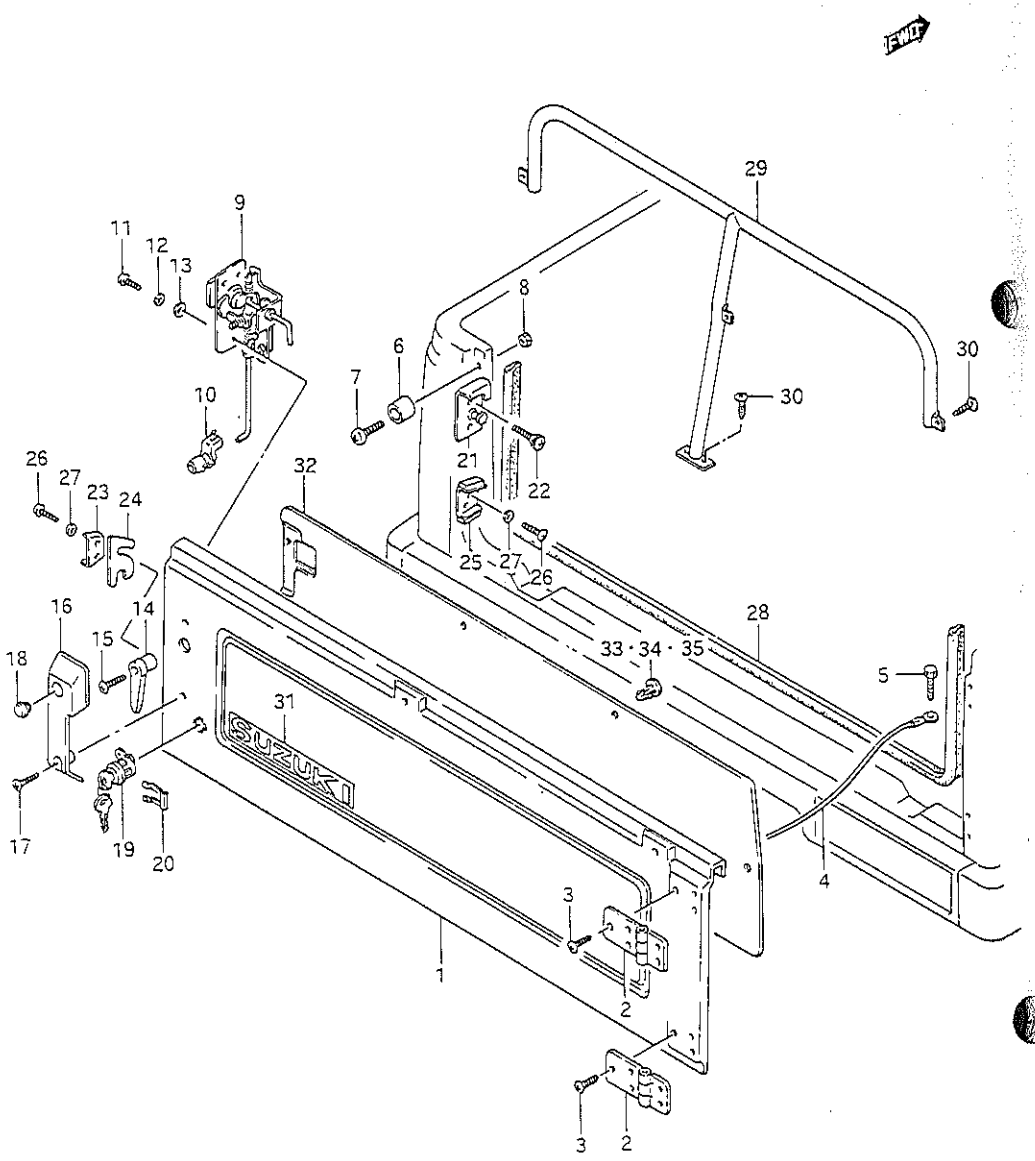

FIG.93 (2-B- 7) REAR GATE (Q,W)

REF.NO.	PART NO.	DESCRIPTION	Q'TY Q/W	REMARKS
25	78261-68201	STOP FEMALE, gate	1	
26	02112-06167	SCREW	4	
27	08321-21067	LOCK WASHER	4	
28	84681-80001	WEATHERSTRIP, gate	1	L:3860→1730
29	72890-80301	PIPE, rear guard bar	1	W:F
30	01517-06103	SCREW	5	W:F
31-1	77813-80010-019	EMBLEM, tail (Black)	1	
31-2	77813-80010-37E	EMBLEM, tail (Gray)	1	
32-1	76140-83000-5GR	TRIM, rear door (Brown)	1	JX
32-2	76140-83000-5GT	TRIM, rear door (Black)	1	JX
33-1	09409-12301-5CW	CLIP (Brown)	7	JX
33-2	09409-12301-281	CLIP (Black)	7	JX
34-1	09409-06312-5CW	CLIP, lower (Brown)	4	W:JX
34-2	09409-06312-281	CLIP, lower (Black)	4	W:JX
35-1	09409-12301-5CW	CLIP, upper (Brown)	6	W:JX
35-2	09409-12301-281	CLIP, upper (Black)	6	W:JX

FIG.94

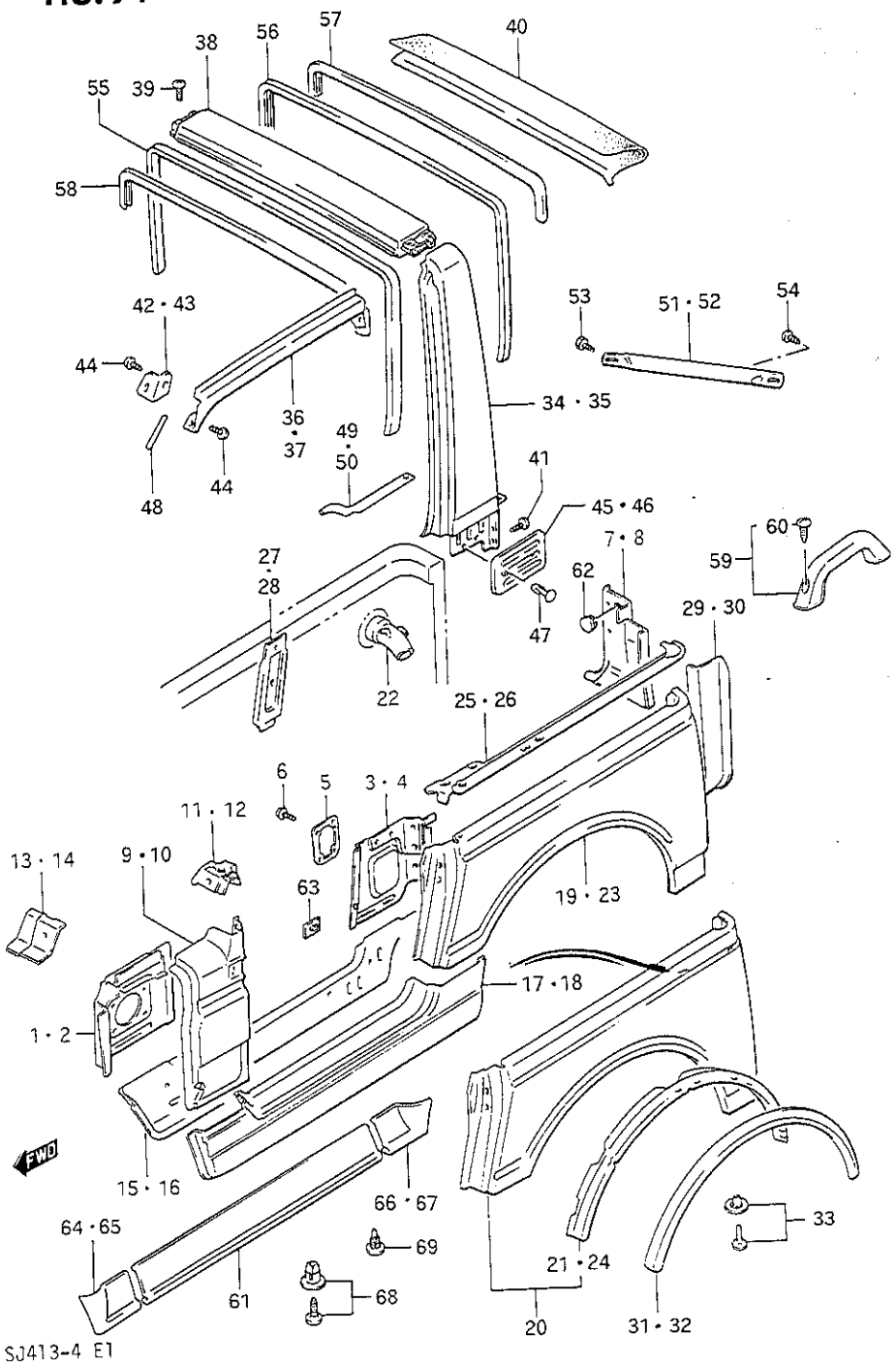

SJ413-4 E1

FIG.94 (2-8- 8) SIDE BODY (Q)

REF.NO.	PART NO.	DESCRIPTION	Q'TY Q	REMARKS
1	63110-70A00	PANEL, front pillar inner RH	1	
2	63510-70A00	PANEL, front pillar inner LH	1	
3-1	63230-80001	PANEL, center pillar inner RH	1	N/E.L.R hole
3-2	63230-80041	PANEL, center pillar inner RH	1	W/E.L.R hole
4-1	63630-80001	PANEL, center pillar inner LH	1	N/E.L.R hole
4-2	63630-80041	PANEL, center pillar inner LH	1	W/E.L.R hole
5	76412-80300	COVER, ELR hole	2	
6	02142-06125	SCREW	8	
7	63310-80001	PANEL, rear pillar inner RH	1	
8	63710-80001	PANEL, rear pillar inner LH	1	
9	64110-80030	PANEL, body front RH	1	
10	64510-80030	PANEL, body front LH	1	
11	64120-80011	PANEL, body front upper RH	1	
12	64520-80011	PANEL, body front upper LH	1	
13	64116-80001	GUSSET, window hinge RH	1	
14	64516-80001	GUSSET, window hinge LH	1	
15	61490-80001	PANEL, sill inner RH	1	
16	61590-80001	PANEL, sill inner LH	1	
17	64150-83000	PANEL, sill outer RH	1	
18	64550-83000	PANEL, sill outer LH	1	
19-1	64200-70A00	PANEL, body rear RH	1	
19-2	64200-70A50	PANEL, body rear RH	1	W/resin top
19-3	64200-70A60	PANEL, body rear RH	1	E43
19-4	64200-70A70	PANEL, body rear RH	1	E43:W/resin top
20-1	64200-70A50	PANEL, body rear RH	1	JX:LHD,E44 W/resin top
20-2	64200-70A20	PANEL, body rear RH	1	E17,E18,E39:W/catalyzer
20-3	64200-70A40	PANEL, body rear RH	1	E22,E25:W/catalyzer
21	64240-83002	.HOLDER, extension RH	1	
22-1	89210-80011	.NECK, fuel tank	1	
22-2	89210-80021	.NECK, fuel tank	1	E17,E18,E39:W/catalyzer
22-3	89210-80001	.NECK, fuel tank	1	E22,E25:W/catalyzer
22-4	89210-80031	.NECK, fuel tank	1	E43

SJ413-4 E1

FIG.94

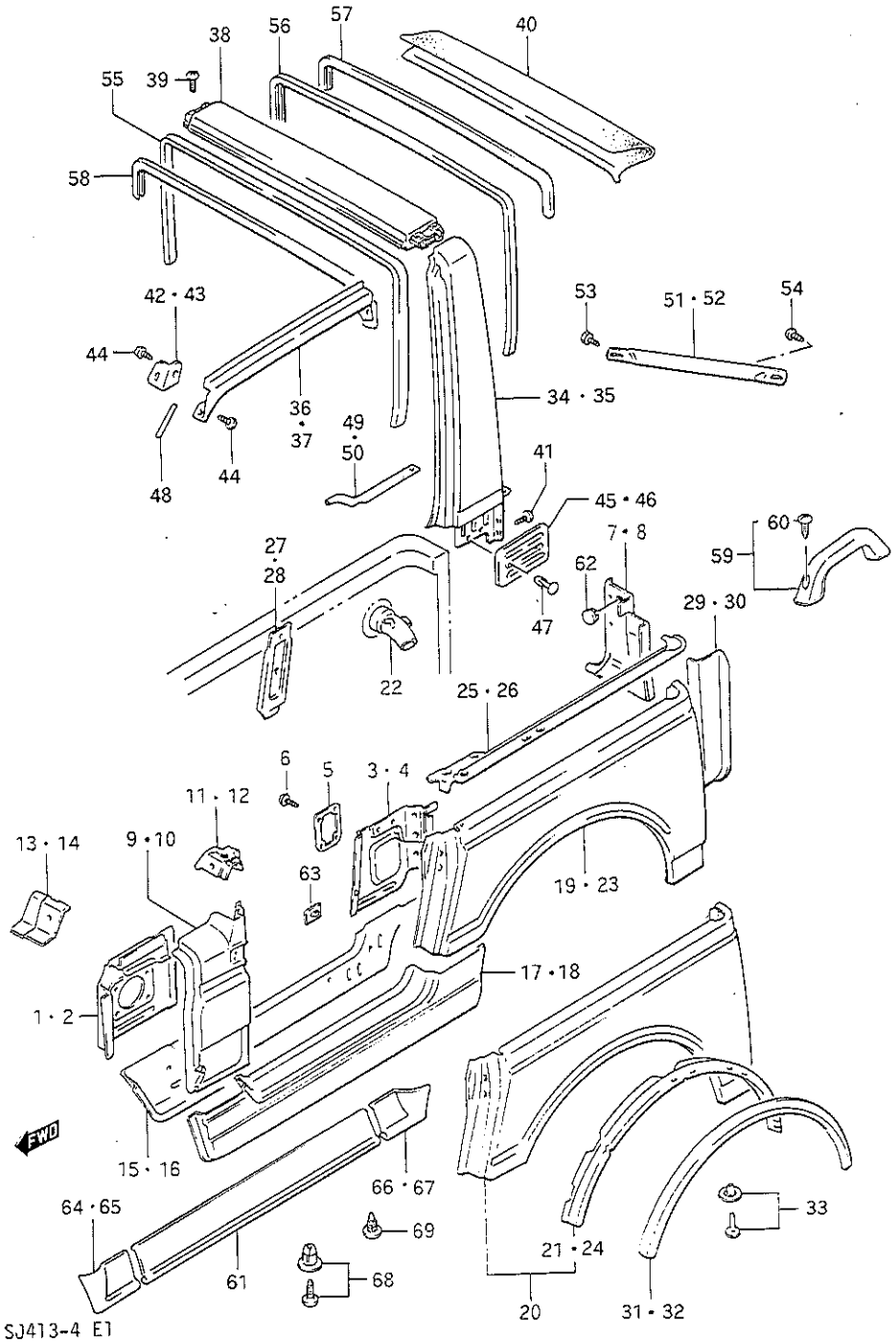

FIG.94 (2-B- 9) SIDE BODY (Q)

REF.NO.	PART NO.	DESCRIPTION	Q'TY Q	REMARKS
23-1	64600-83001	PANEL, body rear LH	1	
23-2	64600-70A10	PANEL, body rear LH	1	W/resin top
24	64640-83002	.HOLDER, extension LH	1	
25-1	64230-80002	PANEL, side upper RH	1	
25-2	64230-80502	PANEL, side upper RH	1	W/resin top
26-1	64630-80002	PANEL, side upper LH	1	
26-2	64630-80502	PANEL, side upper LH	1	W/resin top
27	64235-80001	REINFORCEMENT, upper RH	1	
28	64635-80001	REINFORCEMENT, upper LH	1	
29	64311-80001	PANEL, rear pillar outer RH	1	
30	64710-80001	PANEL, rear pillar outer LH	1	
31-1	77140-83812-21L	EXTENSION, body side RH	1	Peruchet Red
31-2	77140-83812-37T	EXTENSION, body side RH	1	Nova Brown Metallic
31-3	77140-83812-07B	EXTENSION, body side RH	1	Fantasy Black
31-4	77140-83812-18J	EXTENSION, body side RH	1	Crystal Silver Metallic
31-5	77140-83812-20V	EXTENSION, body side RH	1	Gray Metallic
31-6	77140-83812-26U	EXTENSION, body side RH	1	Superior White
31-7	77140-83812-24U	EXTENSION, body side RH	1	Worcester Blue Metallic
31-8	77140-83812-38C	EXTENSION, body side RH	1	Invierno Blue Metallic
31-9	77140-83812-07T	EXTENSION, body side RH	1	Yellow
31-10	77140-83812-27G	EXTENSION, body side RH	1	Samore Turquoise Metallic
32-1	77130-83812-21L	EXTENSION, body side LH	1	Peruchet Red
32-2	77130-83812-37T	EXTENSION, body side LH	1	Nova Brown Metallic
32-3	77130-83812-07B	EXTENSION, body side LH	1	Fantasy Black
32-4	77130-83812-18J	EXTENSION, body side LH	1	Crystal Silver Metallic
32-5	77130-83812-20V	EXTENSION, body side LH	1	Gray Metallic
32-6	77130-83812-26U	EXTENSION, body side LH	1	Superior White
32-7	77130-83812-24U	EXTENSION, body side LH	1	Worcester Blue Metallic
32-8	77130-83812-38C	EXTENSION, body side LH	1	Invierno Blue Metallic
32-9	77130-83812-27G	EXTENSION, body side LH	1	Samore Turquoise Metallic
32-10	77130-83812-07T	EXTENSION, body side LH	1	Yellow
33	09409-07312	.CLIP	12	
34	65710-80301	EXTENSION, side RH	1	
35	65750-80301	EXTENSION, side LH	1	

SJ413-4 E1

FIG.94

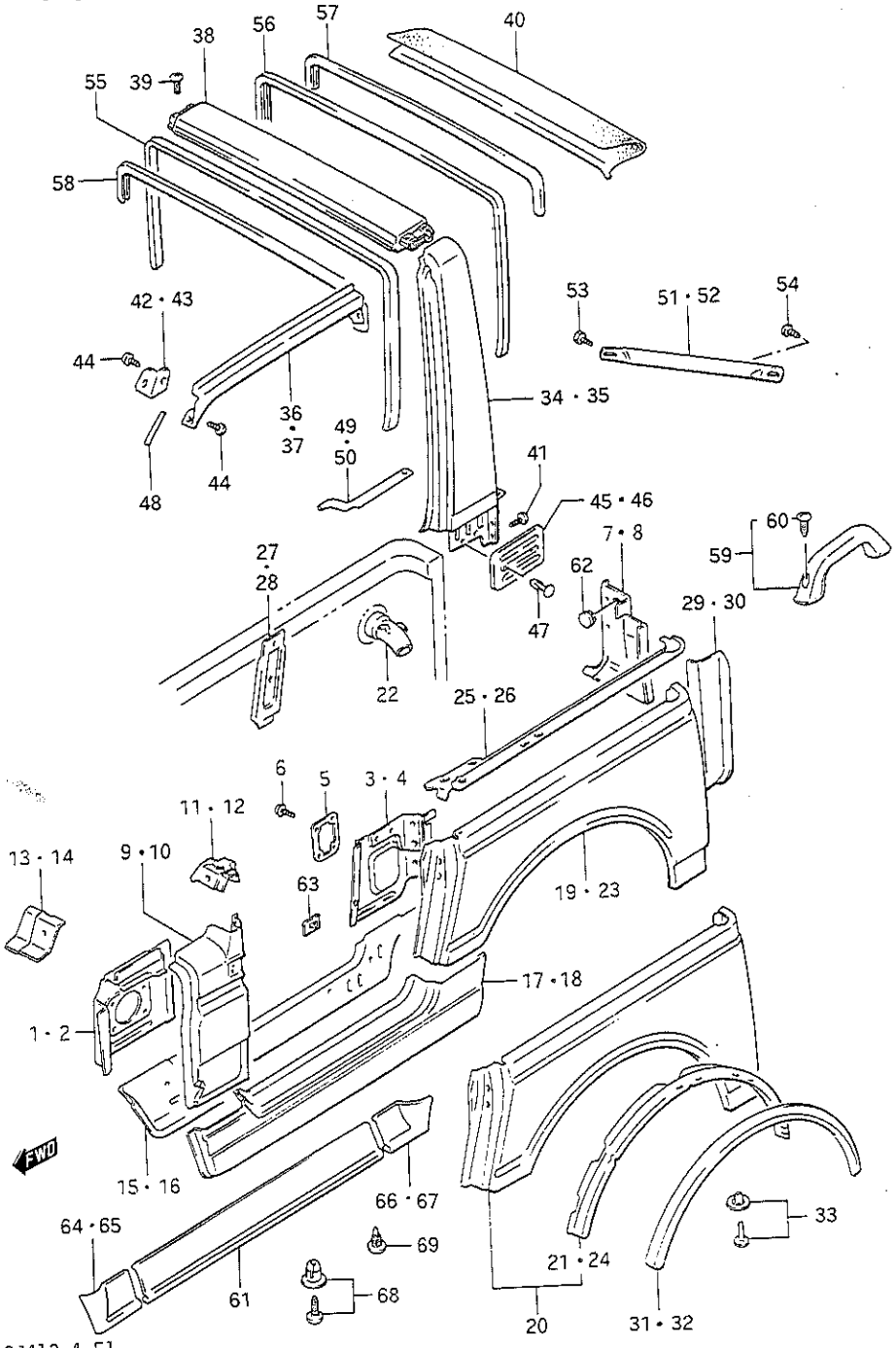

SJ413-4 E1

FIG.94 (2-B-10) SIDE BODY (Q)

REF.NO.	PART NO.	DESCRIPTION	Q'TY Q	REMARKS
35	65770-83011	RAIL, foof side RH	1	
37	65780-83011	RAIL, roof side LH	1	
38	65730-80303	EXTENSION, center	1	
39	09125-06060	SCREW	8	
40	78681-80321	PAD, extension center	1	E22
41	09125-08011	SCREW	12	
42	65775-80010	STAY, roof side RH	1	
43	65785-80010	STAY, roof side LH	1	
44	09125-06073	SCREW	10	
45	77311-80000	GARNISH, extension RH	1	
46	77312-80000	GARNISH, extension LH	1	
47	09409-05304	CLIP	4	
48	77313-80001	SEAL, roof side rail	2	
49	78621-80001	PACKING, extension RH	1	
50	78661-80001	PACKING, extension LH	1	
51	78611-80000	BAR, strain RH	1	
52	78651-80000	BAR, strain LH	1	
53	09100-12015	BOLT, strain (12x22)	2	for without seat belt
54	09125-08011	SCREW, strain	2	
55	84650-80030	OPENING TRIM, extension front	1	
56	84646-80000	OPENING TRIM, extension	1	
57	84640-80020	COVER, extension center rear	1	E2,E6,E15,E16,E17,E18,E19, E25,E34,E54,E68
58	84640-80030	COVER, extension center front	1	E2,E6,E16,E16,E17,E18,E19, E25,E34,E54,E68
59	86200-66813-281	GRIP, assistant	2	for without front door
60	09125-06041	.SCREW	4	
61	77611-83020	MOLDING, side	2	
62	09250-08007	CAP	1	
63	61492-80000	REINF, seat belt lower	2	
64	77614-83021	MOLDING, side FR corner RH	1	
65	77613-83021	MOLDING, side FR corner LH	1	
66	77613-83021	MOLDING, side RR corner RH	1	
67	77614-83021	MOLDING, side RR corner LH	1	
68	09409-07306	CLIP	8	
69	09409-07310	CLIP	4	

SJ413-4 E1

FIG.95

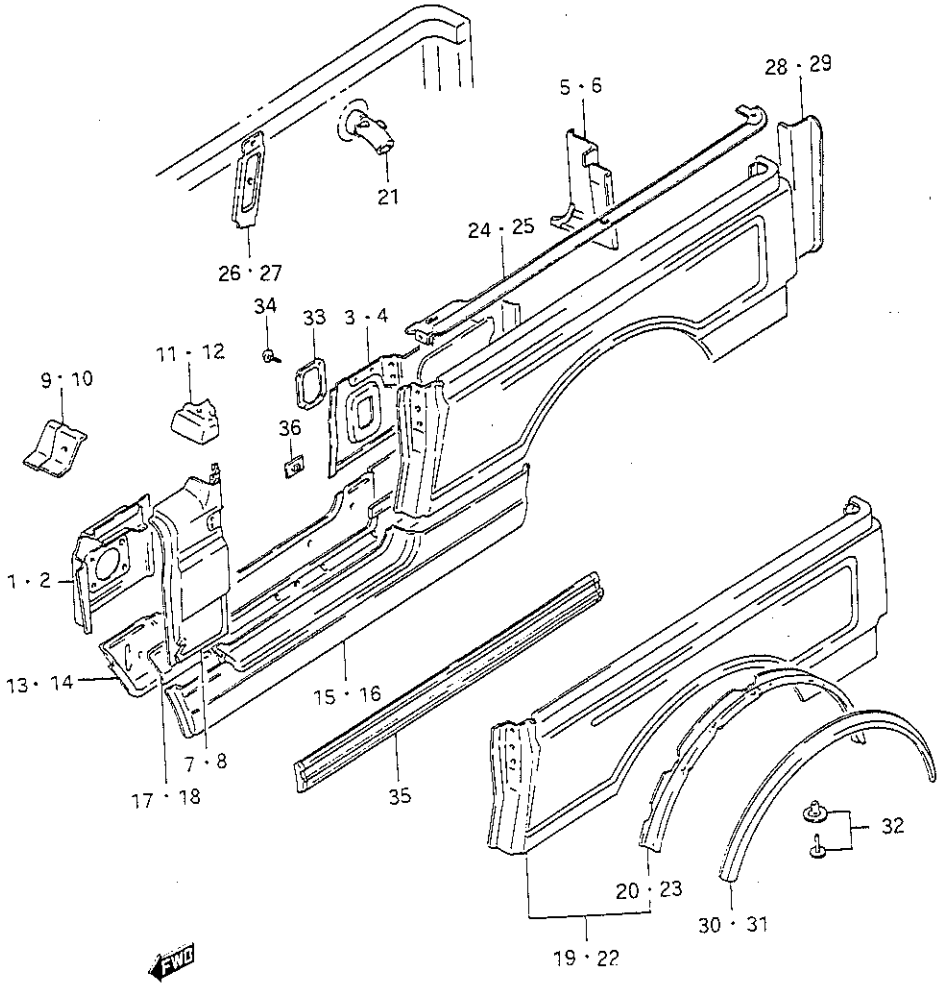

FIG.95 (2-B-11) SIDE BODY (W)

REF.NO.	PART NO.	DESCRIPTION	Q'TY W	REMARKS
1	63110-70A00	PANEL, front pillar inner RH	1	
2	63510-70A00	PANEL, front pillar inner LH	1	
3	63230-80320	PANEL, center pillar inner RH	1	
4	63630-80320	PANEL, center pillar inner LH	1	
5	63310-83550	PANEL, rear pillar inner RH	1	
6	63710-83550	PANEL, rear pillar inner LH	1	
7	64110-80030	PANEL, body front RH	1	
8	64510-80030	PANEL, body front LH	1	
9	64116-80001	GUSSET, window hinge RH	1	
10	64516-80001	GUSSET, window hinge LH	1	
11	64120-80011	PANEL, body front upper RH	1	
12	64520-80011	PANEL, body front upper LH	1	
13	61490-80302	PANEL, sill inner RH	1	
14	61590-80302	PANEL, sill inner LH	1	
15	64150-83300	PANEL, sill outer RH	1	
16	64550-83300	PANEL, sill outer LH	1	
17	64153-80300	REINFORCEMENT, sill side RH	1	
18	64553-80300	REINFORCEMENT, sill side LH	1	
19-1	64200-74A00	PANEL, body rear RH	1	
19-2	64200-74A20	PANEL, body rear RH	1	E17,E18,E39:W/catalyzer
19-3	64200-74A10	PANEL, body rear RH	1	E43
20	64240-83002	.HOLDER, extension RH	1	
21-1	89210-80011	.NECK, fuel tank	1	
21-2	89210-80021	.NECK, fuel tank	1	E17,E18,E39:W/catalyzer
21-3	89210-80031	.NECK, fuel tank	1	E43
22	64600-83300	PANEL, body rear LH	1	
23	64640-83002	.HOLDER, extension LH	1	
24	64230-83560	PANEL, side upper RH	1	
25	64630-83561	PANEL, side upper LH	1	
26	64235-80001	REINFORCEMENT, upper RH	1	
27	64635-80001	REINFORCEMENT, upper LH	1	
28	64311-83550	PANEL, rear pillar outer RH	1	
29	64710-83550	PANEL, rear pillar outer LH	1	

SJ413-4 E1

FIG.95

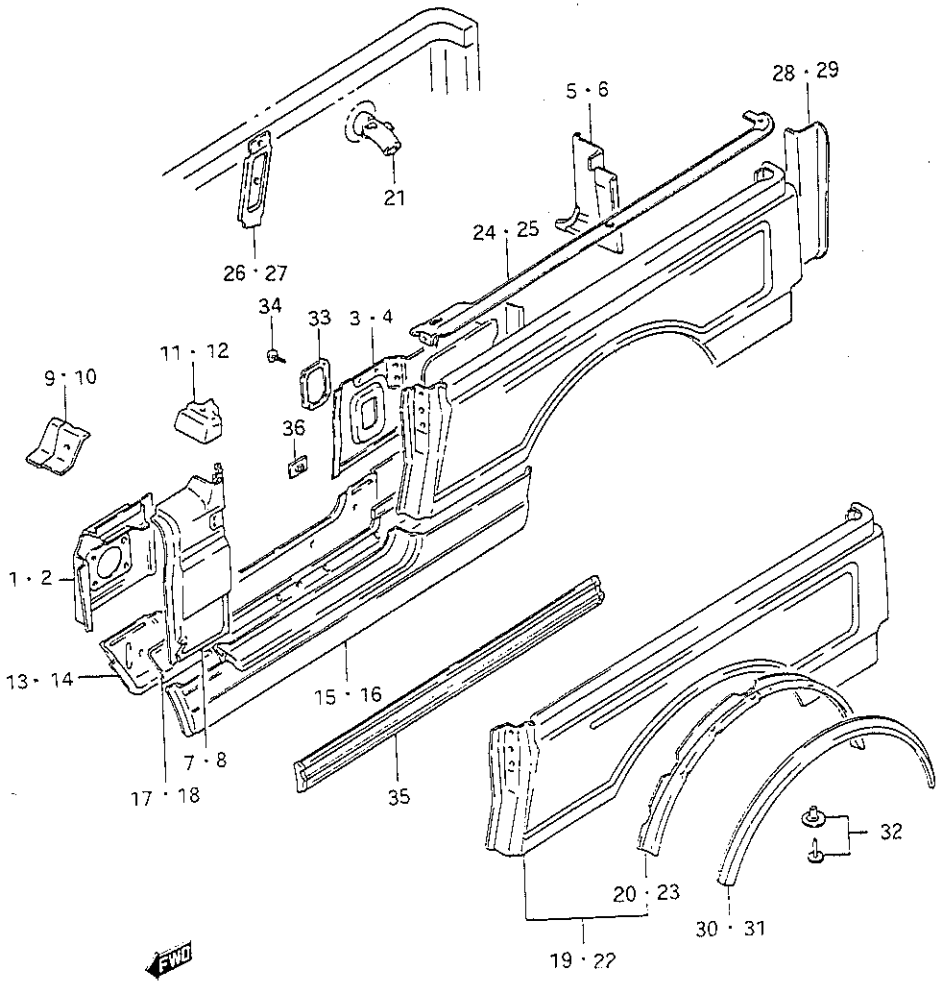

FIG.95 (2-B-12) SIDE BODY (W)

REF.NO.	PART NO.	DESCRIPTION	Q'TY W	REMARKS
30-1	77140-83812-21L	EXTENSION, body side RH	1	Peruchet Red
30-2	77140-83812-37T	EXTENSION, body side RH	1	Nova Brown Metallic
30-3	77140-83812-07B	EXTENSION, body side RH	1	Fantasy Black
30-4	77140-83812-18J	EXTENSION, body side RH	1	Crystal Silver Metallic
30-5	77140-83812-20V	EXTENSION, body side RH	1	Gray Metallic
30-6	77140-83812-26U	EXTENSION, body side RH	1	Superior White
30-7	77140-83812-24U	EXTENSION, body side RH	1	Worcester Blue Metallic
30-8	77140-83812-38C	EXTENSION, body side RH	1	Invierno Blue Metallic
30-9	77140-83812-27G	EXTENSION, body side RH	1	Samore Turquoise Metallic
30-10	77140-83812-07T	EXTENSION, body side RH	1	Yellow
31-1	77130-83812-21L	EXTENSION, body side LH	1	Peruchet Red
31-2	77130-83812-37T	EXTENSION, body side LH	1	Nova Brown Metallic
31-3	77130-83812-07B	EXTENSION, body side LH	1	Fantasy Black
31-4	77130-83812-18J	EXTENSION, body side LH	1	Crystal Silver Metallic
31-5	77130-83812-20V	EXTENSION, body side LH	1	Gray Metallic
31-6	77130-83812-26U	EXTENSION, body side LH	1	Superior White
31-7	77130-83812-24U	EXTENSION, body side LH	1	Worcester Blue Metallic
31-8	77130-83812-38C	EXTENSION, body side LH	1	Invierno Blue Metallic
31-9	77130-83812-27G	EXTENSION, body side LH	1	Samore Turquoise Metallic
31-10	77130-83812-07T	EXTENSION, body side LH	1	Yellow
32	09409-07312	.CLIP	12	
33	76412-80300	COVER, ELR hole	2	
34	02142-06125	SCREW	8	
35	77611-83010	MOLDING, side	2	
36	61492-80000	REINF, seat belt lower	2	

SJ413-4 E1

FIG.96

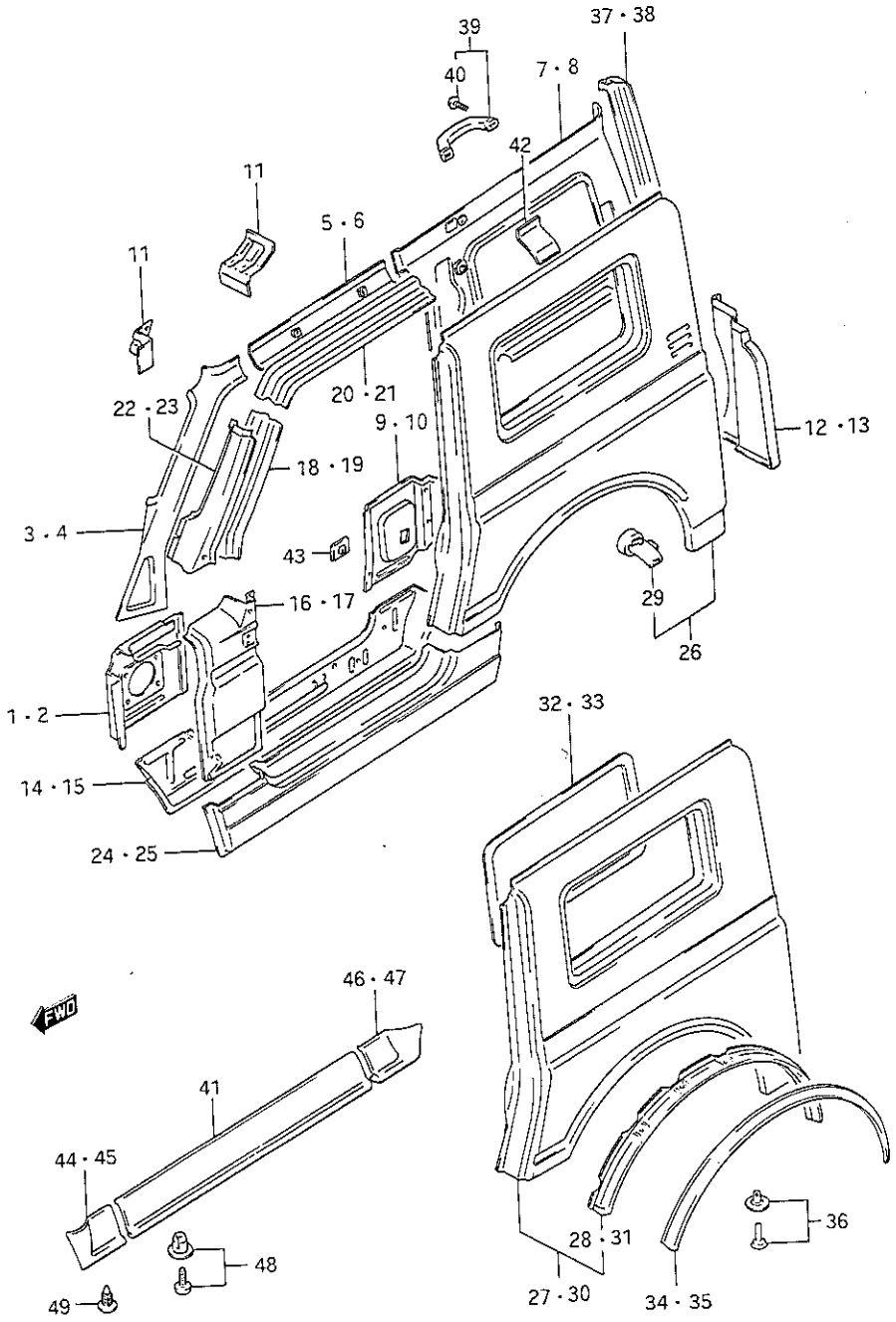

SJ413-4 E1

FIG.96 (2-B-13) SIDE BODY (V)

REF.NO.	PART NO.	DESCRIPTION	Q'TY V	REMARKS
1	63110-70A00	PANEL, front pillar inner RH	1	
2	63510-70A00	PANEL, front pillar inner LH	1	
3	63121-80100	PANEL, front pillar upper RH	1	
4	63521-80110	PANEL, front pillar upper LH	1	
5	63131-80140	PANEL, roof inner RH	1	
6	63531-80100	PANEL, roof inner LH	1	
7-1	63210-80141	PANEL, rear inner RH	1	JA:LHD
7-2	63210-80121	PANEL, rear inner RH	1	JA:RHD
7-3	63210-80400	PANEL, rear inner RH	1	JA:E14,E30,E68
7-4	63210-80151	PANEL, rear inner RH	1	JX:LHD
7-5	63210-80400	PANEL, rear inner RH	1	JX:RHD
7-6	63210-80420	PANEL, rear inner RH	1	E2,E27,E68(4 persons)
7-7	63210-80400	PANEL, rear inner RH	1	E2(2 persons)
7-8	63210-80430	PANEL, rear inner RH	1	E15,E16,E17,E18,E19,E22, E25,E34,E39,E46,E54
8-1	63610-80131	PANEL, rear inner LH	1	JA:LHD
8-2	63610-80141	PANEL, rear inner LH	1	JA:RHD
8-3	63610-80400	PANEL, rear inner LH	1	JA:E14,E30,E68
8-4	63610-80171	PANEL, rear inner LH	1	JX:LHD
8-5	63610-80400	PANEL, rear inner LH	1	JX:RHD
8-6	63610-80420	PANEL, rear inner LH	1	E2,E27,E68(4 persons)
8-7	63610-80400	PANEL, rear inner LH	1	E2(2 persons)
8-8	63610-80430	PANEL, rear inner LH	1	E15,E18,E19,E22,E25, E39,E54
9-1	63231-80112	PANEL, center pillar inner RH	1	N/E.L.R hole
9-2	63231-80152	PANEL, center pillar inner RH	1	W/E.L.R hole
10-1	63631-80112	PANEL, center pillar inner LH	1	N/E.L.R hole
10-2	63631-80152	PANEL, center pillar inner LH	1	W/E.L.R hole
11	63233-80001	HOLDER, center pipe	2	
12	63310-80101	PANEL, rear pillar inner RH	1	
13	63710-80101	PANEL, rear pillar inner LH	1	

SJ413-4 E1

FIG.96

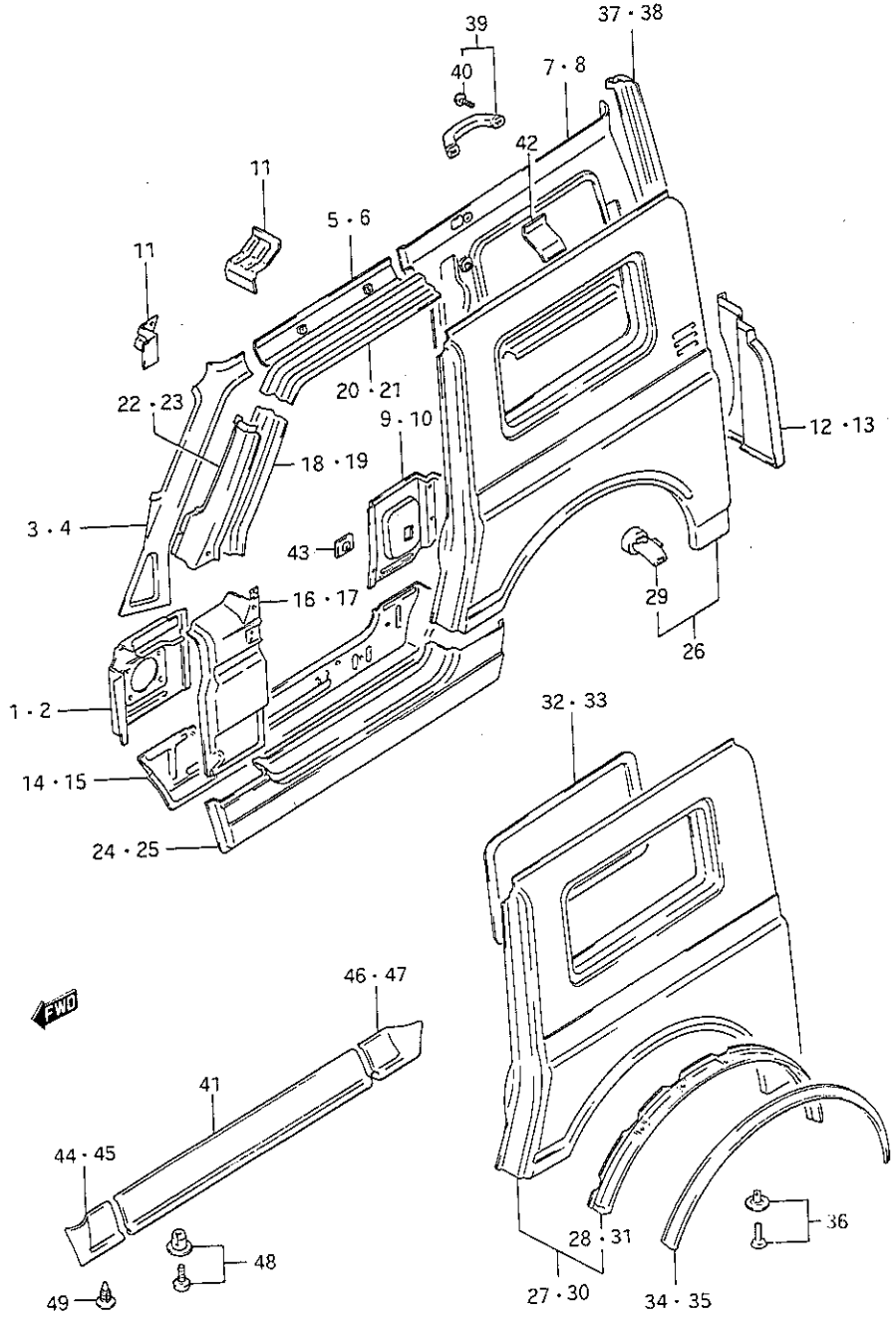

SJ413-4 E1

FIG.96 (2-B-14) SIDE BODY (V)

REF.NO.	PART NO.	DESCRIPTION	Q'TY	REMARKS
14	61490-80001	PANEL, sill inner RH	1	
15	61590-80001	PANEL, sill inner LH	1	
16	64110-80180	PANEL, body front RH	1	
17	64510-80180	PANEL, body front LH	1	
18	64131-80100	FRAME, front window RH	1	
19	64531-80100	FRAME, front window LH	1	
20	64132-80100	FRAME, side front RH	1	
21	64532-80100	FRAME, side front LH	1	
22-1	64141-80122	PANEL, front pillar outer RH	1	LHD
22-2	64141-80112	PANEL, front pillar outer RH	1	RHD
23-1	64541-80122	PANEL, front pillar outer LH	1	LHD
23-2	64541-80112	PANEL, front pillar outer LH	1	RHD
24	64150-83000	PANEL, sill outer RH	1	
25	64550-83000	PANEL, sill outer LH	1	
26	64200-71A00	PANEL, body rear RH	1	
27-1	64200-71A20	PANEL, body rear RH	1	E17,E18,E39:W/catalyzer
27-2	64200-71A30	PANEL, body rear RH	1	E22,E25:W/catalyzer
27-3	64200-71A80	PANEL, body rear RH	1	E43
28	64240-83002	.HOLDER, extension RH	1	
29-1	89210-80011	.NECK, fuel tank	1	
29-2	89210-80021	.NECK, fuel tank	1	E17,E18,E39:W/catalyzer
29-3	89210-80001	.NECK, fuel tank	1	E22,E25:W/catalyzer
29-4	89210-80031	.NECK, fuek tank	1	E43
30	64600-83100	PANEL, body rear LH	1	
31	64640-83002	.HOLDER, extension LH	1	
32	64217-80130	COVER, rear side window RH	1	E2,E16,E19,E25,E39,E68 (2 persons)
33	64617-80130	COVER, rear side window LH	1	E2,E16,E19,E25,E39,E68 (2 persons)

SJ413-4 E1

FIG.96

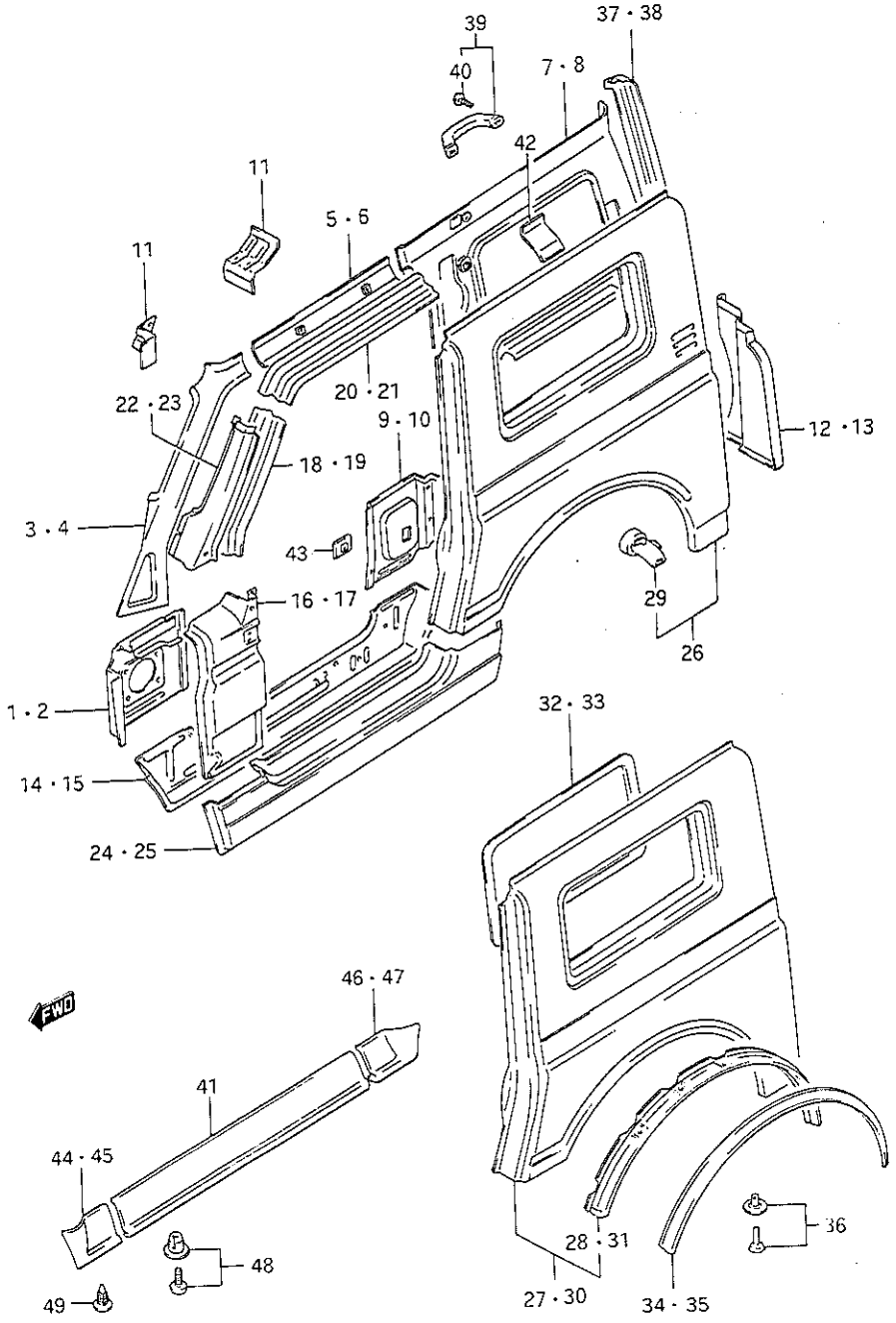

SJ413-4 E1

FIG.96 (2-B-15) SIDE BODY (V)

REF.NO.	PART NO.	DESCRIPTION	Q'TY V	REMARKS
34-1	77140-83812-21L	EXTENSION, body side RH	1	Peruchet Red
34-2	77140-83812-37T	EXTENSION, body side RH	1	Nova Brown Metallic
34-3	77140-83812-07B	EXTENSION, body side RH	1	Fantasy Black
34-4	77140-83812-18J	EXTENSION, body side RH	1	Crystal Silver Metallic
34-5	77140-83812-20V	EXTENSION, body side RH	1	Gray Metallic
34-6	77140-83812-26U	EXTENSION, body side RH	1	Superior White
34-7	77140-83812-24U	EXTENSION, body side RH	1	Worcester Blue Metallic
34-8	77140-83812-38C	EXTENSION, body side RH	1	Invierno Blue Metallic
34-9	77140-83812-27G	EXTENSION, body side RH	1	Samore Turquoise Metallic
34-10	77140-83812-07T	EXTENSION, body side RH	1	Yellow
35-1	77130-83812-21L	EXTENSION, body side LH	1	Peruchet Red
35-2	77130-83812-37T	EXTENSION, body side LH	1	Nova Brown Metallic
35-3	77130-83812-07B	EXTENSION, body side LH	1	Fantasy Black
35-4	77130-83812-18J	EXTENSION, body side LH	1	Crystal Silver Metallic
35-5	77130-83812-20V	EXTENSION, body side LH	1	Gray Metallic
35-6	77130-83812-26U	EXTENSION, body side LH	1	Superior White
35-7	77130-83812-24U	EXTENSION, body side LH	1	Worcester Blue Metallic
35-8	77130-83812-38C	EXTENSION, body side LH	1	Invierno Blue Metallic
35-9	77130-83812-27G	EXTENSION, body side LH	1	Samore Turquoise Metallic
35-10	77130-83812-07T	EXTENSION, body side LH	1	Yellow
36	09409-07312	.CLIP	12	
37	64310-80100	PANEL, rear back outer RH	1	
38	64710-80100	PANEL, rear back outer LH	1	
39	86200-66813-281	GRIP SET, assistant	3	
40	09125-06041	.SCREW	6	
41	77611-83020	MOLDING, side	2	
42	64216-80140	REINF, assistant grip	3	
43	61492-80000	REINF, seat belt lower	2	
44	77614-83021	MOLDING, side FR corner RH	1	
45	77613-83021	MOLDING, side FR corner LH	1	
46	77613-83021	MOLDING, side RR corner RH	1	
47	77614-83021	MOLDING, side RR corner LH	1	
48-1	09409-07306	CLIP	8	
48-2	09409-07310	CLIP	4	

SJ413-4 E1

FIG. 97

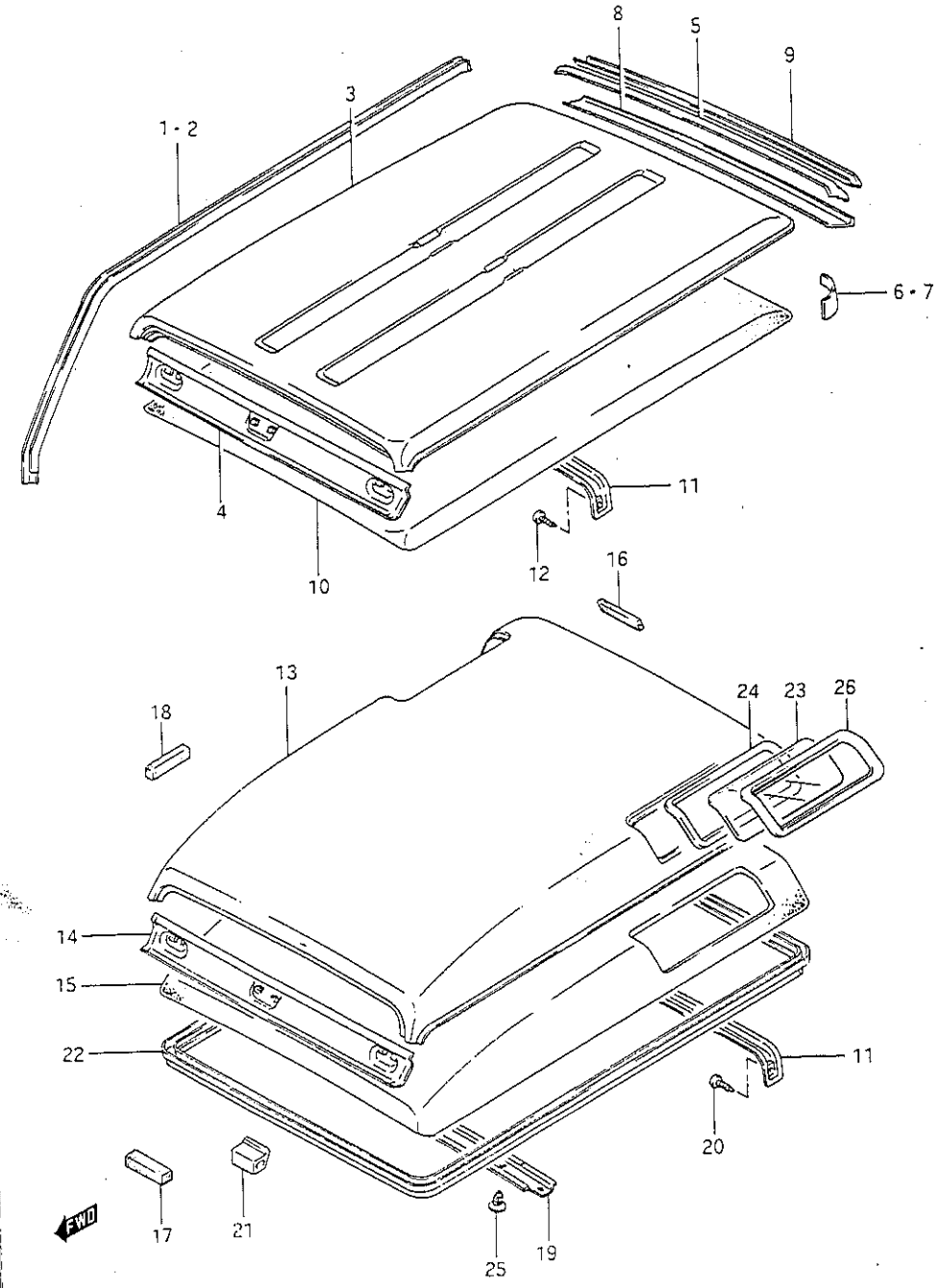

SJ413-4 E1

FIG.97 (2-B-16) ROOF PANEL (V)

REF.NO.	PART NO.	DESCRIPTION	Q'TY V	REMARKS
1	64351-80101	RAIL, roof drip RH	1	
2	64751-80101	RAIL, roof drip LH	1	
3	65111-80103	PANEL, roof	1	
4	65120-80101	PANEL, roof front inner	1	
5	65130-80100	FRAME, back outer	1	
6	65134-80100	REINFORCEMENT, RH	1	
7	65135-80100	REINFORCEMENT, LH	1	
8	65141-80110	FRAME, roof back inner	1	
9	65241-80101	RAIL, roof drip rear	1	
10-1	78111-80101-4FL	HEAD LINING, roof panel	1	JA
10-2	78111-80111-4KK	HEAD LINING, roof panel	1	JA:E15
10-3	78111-80141-4KW	HEAD LINING, roof panel	1	JX
10-4	78111-80121-4FL	HEAD LINING, roof panel	1	E30
11	78141-80102	REINFORCEMENT, roof	1	
12	02142-06126	SCREW	2	
13	65110-83600	PANEL, high roof	1	high roof
14	65120-83101	PANEL, roof front inner	1	high roof
15	78111-83601-4KW	HEAD LINING, roof panel	1	high roof
16	78131-83100	PAD, head lining	4	high roof
17	78132-83101	PAD, head lining roof front	3	high roof
18	78133-83100	PAD, head lining roof side	2	
19	78141-83101	REINFORCEMENT	1	high roof
20	02142-06125	SCREW	4	high roof
21	78142-83100	CUSHION, front food	1	high roof
22	78121-83002-4GF	TRIM, roof side	1	high roof
23	78211-83600	GLASS, roof side	2	high roof
24	78221-83601	WEATHERSTRIP, side window	2	high roof
25	09409-06309-4GF	CLIP, head lining foor	6	high roof
26	78230-83601	MOLDING, roof side window	2	high roof

SJ413-4 F1

FIG.98

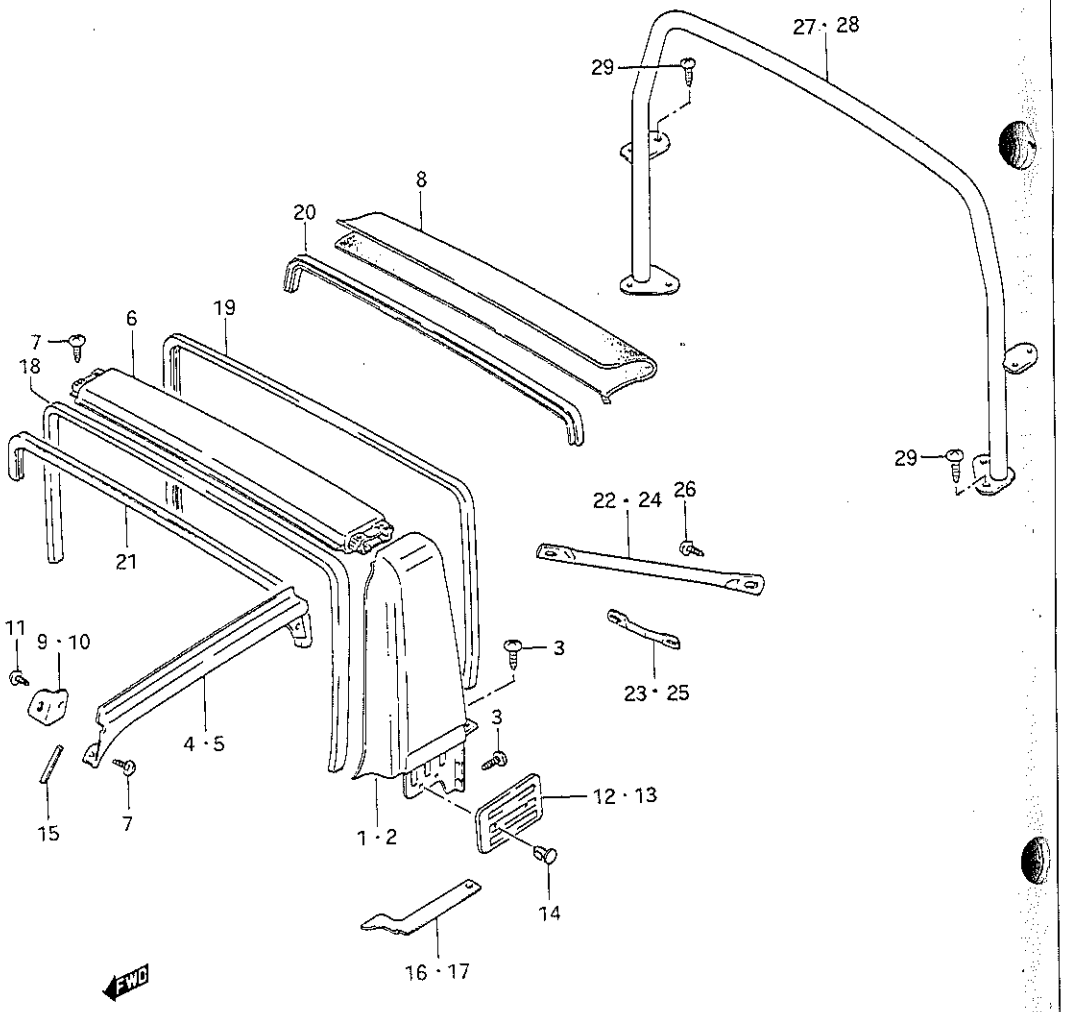

FIG.98 (2-C- 2) CENTER PILLAR EXTENSION (W)

REF.NO.	PART NO.	DESCRIPTION	Q'TY W	REMARKS
1-1	65710-80301	EXTENSION, side RH	1	
1-2	65710-80400	EXTENSION, side RH	1	W/resin top
2-1	65750-80301	EXTENSION, side LH	1	
2-2	65750-80400	EXTENSION, side LH	1	W/resin top
3	09125-08007	SCREW	12	
4	65770-83011	RAIL, roof side RH	1	
5	65780-83011	RAIL, roof side LH	1	
6-1	65730-80303	EXTENSION, center	1	
6-2	65730-83001	EXTENSION, center	1	W/resin top
7	09125-06060	SCREW	8	
8	78681-80301	PAD, extension center	1	
9	65775-80010	STAY, roof side RH	1	
10	65785-80010	STAY, roof side LH	1	
11	02142-06164	SCREW	10	
12	77311-80000	GARNISH, extension RH	1	
13	77312-80000	GARNISH, extension LH	1	
14	09409-05304	CLIP	4	
15	77313-80001	SEAL, roof side rail	2	
16	78621-80001	PACKING, extension RH	1	
17	78661-80001	PACKING, extension LH	1	
18	84650-80030	TRIM, opening extension front	1	
19	84646-80000	TRIM, opening extension	1	
20	84640-80020	COVER, extension center	1	E2,E6,E15,E16,E17,E18,E19, E22,E25,E34,E54
21	84640-80030	COVER, extension center	1	E2,E6,E15,E16,E17,E18,E19, E22,E25,E34,E54
22	78611-80000	BAR, strain RH	1	C,F(2 persons)
23	78611-80300	BAR, strain RH	1	F(6 persons)
24	78651-80000	BAR, strain LH	1	C,F(2 persons)
25	78651-80300	BAR, strain LH	1	F(6 persons)
26	09125-08011	SCREW	2	
27	78660-80340	PIPE, rear	1	C
28	78660-80300	PIPE, rear	1	F
29-1	09125-08011	SCREW	8	C
29-2	09125-08011	SCREW	10	F

SJ413-4 E1

FIG.99

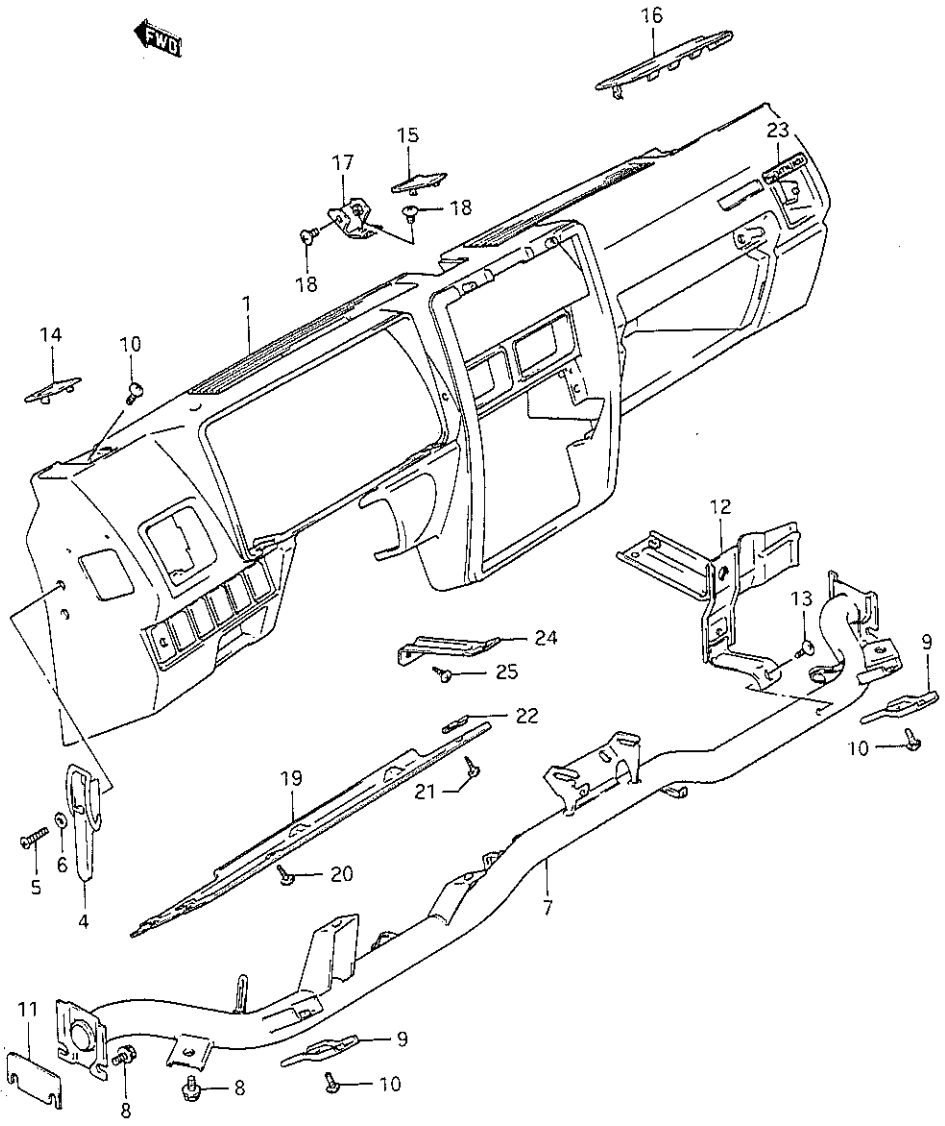

FIG.99 (2-C- 3) INSTRUMENT PANEL

REF.NO.	PART NO.	DESCRIPTION	Q'TY Q/W	Q'TY V	REMARKS
1-1	73111-70A11-5CW	PANEL, instrument (Brown)	1	1	LHD
1-2	73111-70A11-5ES	PANEL, instrument (Black)	1	1	LHD
1-3	73111-70A01-5CW	PANEL, instrument (Brown)	1	1	RHD
1-4	73111-70A01-5ES	PANEL, instrument (Black)	1	1	RHD
2	02112-06164	SCREW	4	4	
3	09160-06074	WASHER	4	4	
4	72430-80002	HANDLE, window lock	2	-	
5	02112-06164	SCREW	4	-	
6	08322-21064	WASHER	4	-	
7-1	72310-70A20	HOLDER, steering column	1	1	LHD:W/heater
7-2	72310-70A30	HOLDER, steering column	1	1	LHD:N/heater
7-3	72310-70A00	HOLDER, steering column	1	1	RHD
8	01517-08166	BOLT	6	6	
9	72322-83000	STAY, instrument	2	2	
10	02142-06164	SCREW	6	6	
11	72321-80001	PLATE, holder	1	1	
12-1	73810-83030	STAY, hood lock opener	1	1	LHD
12-2	73810-83020	STAY, hood lock opener	1	1	RHD
12-3	73810-83000	STAY, hood lock opener	1	1	E15,E16,E17,E18,E19,E22, E25,E39,E54
13	03141-06125	SCREW, hood opener stay	1	1	
14-1	73811-70A00-5CW	CAP, No.1 (Brown)	1	1	
14-2	73811-70A00-5ES	CAP, No.1 (Black)	1	1	
15-1	73812-70A01-5CW	CAP, No.3 (Brown)	1	1	
15-2	73812-70A01-5ES	CAP, No.3 (Black)	1	1	
16-1	73821-70A11-5CW	CAP, No.2 RH (Brown)	1	1	LHD
16-2	73821-70A11-5ES	CAP, No.2 RH (Black)	1	1	LHD
16-3	73831-70A01-5CW	CAP, No.2 LH (Brown)	1	1	RHD
16-4	73831-70A01-5ES	CAP, No.2 LH (Black)	1	1	RHD
17	73815-70A00	BRACKET, center	1	1	
18	02142-06123	SCREW	3	3	

FIG.99

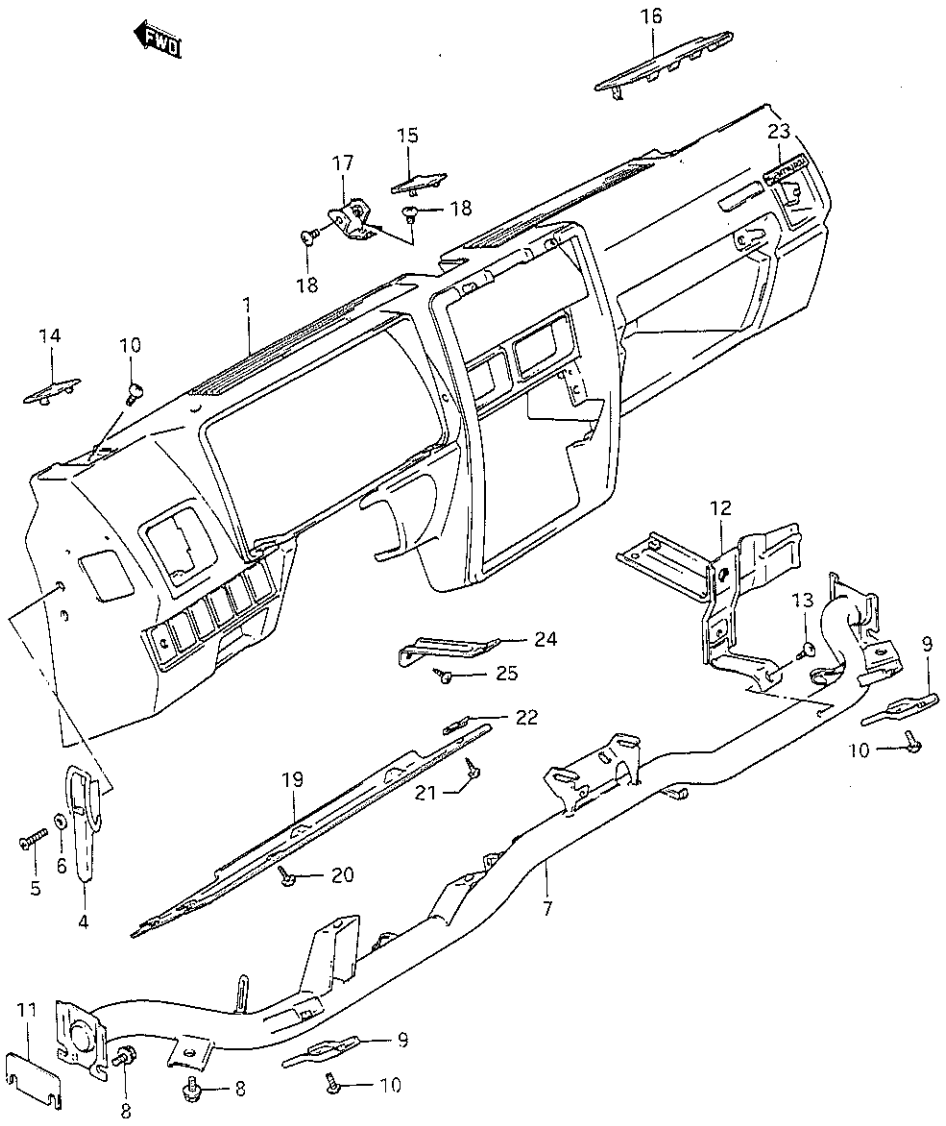

FIG.99 (2-C- 4) INSTRUMENT PANEL

REF.NO.	PART NO.	DESCRIPTION	Q'TY Q/W	Q'TY V	REMARKS
19-1	73813-83010-5CW	COVER, lower (Brown)	1	1	LHD
19-2	73813-83010-5ES	COVER, lower (Black)	1	1	LHD
19-3	73813-83000-5CW	COVER, lower (Brown)	1	1	RHD
19-4	73813-83000-5ES	COVER, lower (Black)	1	1	RHD
20	03141-06125	SCREW	2	2	
21	03242-05165	SCREW	1	1	
22	09148-05013	NUT	1	1	
23-1	77811-83060	EMBLEM, instrument	1	1	SAMURAI
23-2	77811-83040	EMBLEM, instrument	1	-	SJ413
24	73825-70A00	STAY, instrument center	1	1	
25	03242-05165	SCREW	2	2	

SJ413-4 E1

FIG.100

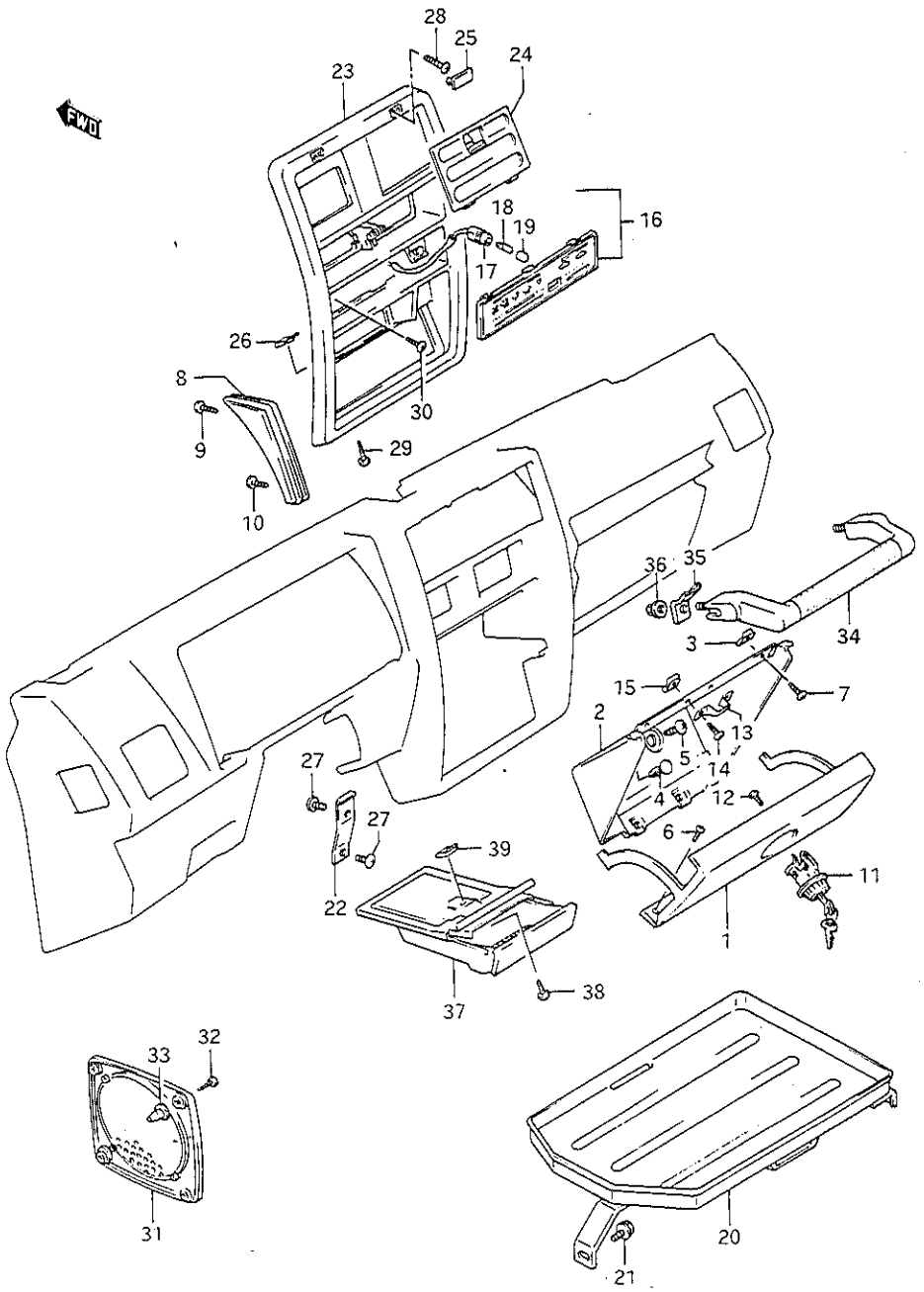

FIG.100(2-C- 5) GLOVE BOX

REF.NO.	PART NO.	DESCRIPTION	Q'TY Q/W	Q'TY V	REMARKS
1-1	73411-70A00-5CW	LID, glove box (Brown)	1	1	
1-2	73411-70A00-5ES	LID, glove box (Black)	1	1	
2-1	73451-70A10-5CW	COVER, glove box upper (Brown)	1	1	LHD
2-2	73451-70A10-5ES	COVER, glove box upper (Black)	1	1	LHD
2-3	73451-70A00-5CW	COVER, glove box upper (Brown)	1	1	RHD
2-4	73451-70A00-5ES	COVER, glove box upper (Black)	1	1	RHD
3	09148-05013	NUT, glove box cover	2	2	
4-1	09409-10301-5CW	CLIP, glove box cover (Brown)	1	1	
4-2	09409-10301-5ES	CLIP, glove box cover (Black)	1	1	
5	02142-06164	SCREW, glove box cover No.2	1	1	
6	03111-04165	SCREW, glove box lid	3	3	
7	03242-05165	SCREW, glove box cover No.1	2	2	
8-1	73823-70A10-281	ESCUTCHEON, instrument LH	1	1	LHD
8-2	73833-70A00-281	ESCUTCHEON, instrument LH	1	1	RHD
9	03541-05123	SCREW	1	1	
10	03541-05163	SCREW	1	1	
11	73900-80832	LOCK ASSY, glove box lid	1	1	
12	02142-04106	SCREW	2	2	
13	73951-70A00	STRIKER, glove box lid	1	1	
14	03242-05165	SCREW	2	2	
15	09148-05013	NUT	2	2	
16-1	73851-70A60	PANEL, VENT control	1	1	LHD,N/HTR,N/A.C
16-2	73851-70A70	PANEL, VENT control	1	1	LHD,N/HTR,W/A.C
16-3	73851-70A41	PANEL, VENT control	1	1	RHD,N/HTR,N/A.C
16-4	73851-70A51	PANEL, VENT control	1	1	RHD,N/HTR,W/A.C
16-5	73850-70A00-281	PANEL, HTR control (W/lamp)	1	1	
17	73855-83000	.SOCKET	1	1	
18	73856-82000	.BULB	1	1	
19	73857-70A00	.CAP	1	1	
20-1	75610-83020	TRAY, front package	1	1	LHD
20-2	75610-83030	TRAY, front package	1	1	RHD
21	01517-06106	BOLT, stay	2	2	
22	73824-83000	STAY, tuner	1	1	

SJ413-4 E1

FIG.100

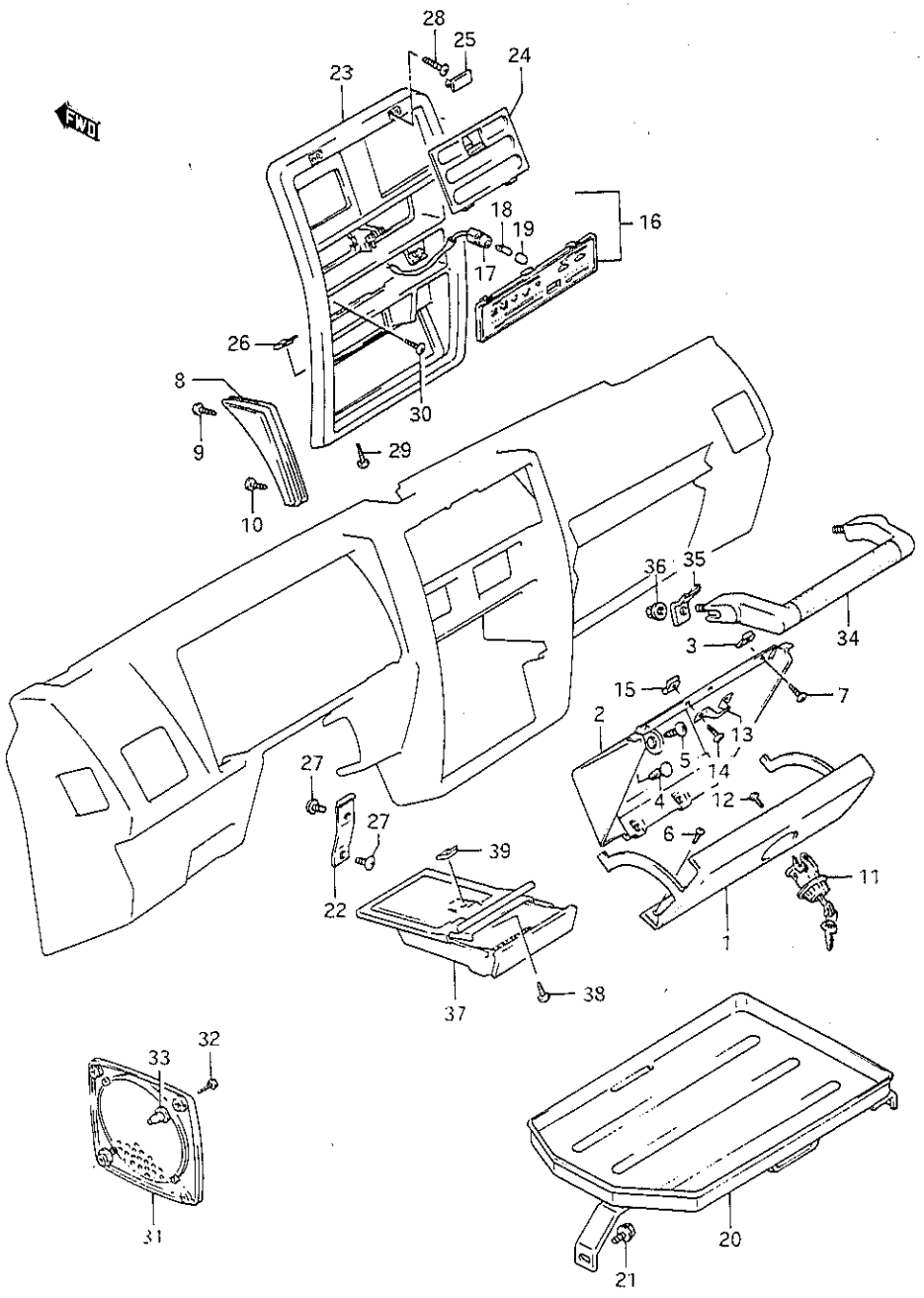

FIG.100(2-C- 6) GLOVE BOX

REF.NO.	PART NO.	DESCRIPTION	Q'TY Q/W	Q'TY V	REMARKS
23	73841-70A00-281	PANEL, console	1	1	
24	73842-70A00-281	LID, console panel	1	1	
25	73843-70A01-281	CAP, console panel	2	2	
26	09148-05013	NUT, console panel	2	2	
27	02142-06125	SCREW, tuner stay	2	2	
28	03111-05303	SCREW, console panel	2	2	
29	03242-05165	SCREW, console panel	2	2	
30	03541-05123	SCREW, console upper	2	2	
31	76411-80000	COVER, speaker	2	2	
32	03142-04169	SCREW, cover	4	4	
33	09159-04004	NUT, cover	8	8	
34-1	84410-70A00-5CW	GRIP, assistant front (Brown)	1	1	
34-2	84410-70A00-5ES	GRIP, assistant front (Black)	1	1	
35	84422-70A00	WASHER	2	2	
36	08316-26086	NUT	2	2	
37	89810-70A00-281	ASHTRAY, front	1	1	
38	03241-05108	SCREW	2	2	
39	09148-05013	NUT	2	2	

SJ413-4 E1

FIG. 101

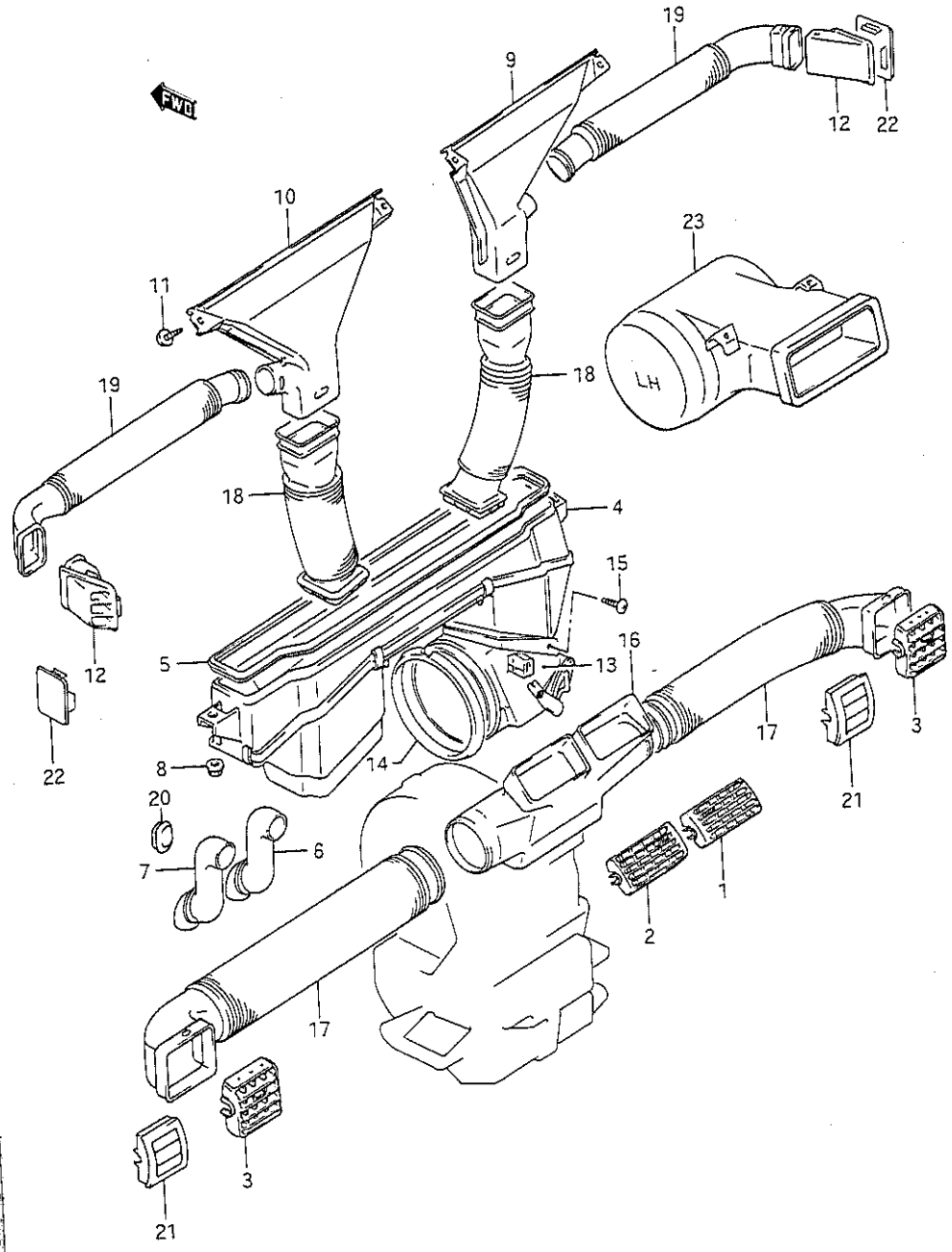

FIG.101(2-C- 7) VENTILATOR

REF.NO.	PART NO.	DESCRIPTION	Q'TY Q/W	Q'TY V	REMARKS
1	73210-70A00-281	LOUVER, ventilator RH	1	1	
2	73220-70A00-281	LOUVER, ventilator LH	1	1	
3	73230-70A00-281	LOUVER, ventilator side	2	2	
4-1	73610-83021	BOX, cowl ventilator	1	1	LHD,W/heater
4-2	73610-83040	BOX, cowl ventilator	1	1	LHD,N/heater
4-3	73610-83001	BOX, cowl ventilator	1	1	RHD,W/heater
4-4	73610-83031	BOX, cowl ventilator	1	1	RHD,N/heater
5	73613-83000	WEATHERSTRIP, box	1	1	
6	73641-83010	HOSE, ventilator box RH	1	1	
7	73642-83010	HOSE, ventilator box LH	1	1	
8	08316-16066	NUT	2	2	
9	73650-83001	NOZZLE, defroster RH	1	1	
10	73660-83001	NOZZLE, defroster LH	1	1	
11	03541-05126	SCREW	4	4	
12	73671-83000-281	NOZZLE, defroster RH	1	1	
13-1	74250-83020	BOX, heater control	1	1	LHD
13-2	74250-83000	BOX, heater control	1	1	RHD
14	74259-83000	PACKIN	1	1	
15	03541-04106	SCREW	2	2	
16-1	74611-70A00	DUCT, ventilator	1	1	W/heater
16-2	74611-70A10	DUCT, ventilator	1	1	N/heater
17	74612-70A00	HOSE, side ventilator	2	2	
18	74614-83000	HOSE, defroster	2	2	
19	74615-70A00	HOSE, side defroster	2	2	
20	73621-80000	GROMMET, ventilator	2	2	N/heater
21	73221-70A00	LID, ventilator hole	2	2	N/heater
22	73675-83020-281	LID, side defroster hole	2	2	N/heater
23	74621-83040	DUCT, CTR ventilator	1	1	N/heater

SJ413-4 E1

FIG.102

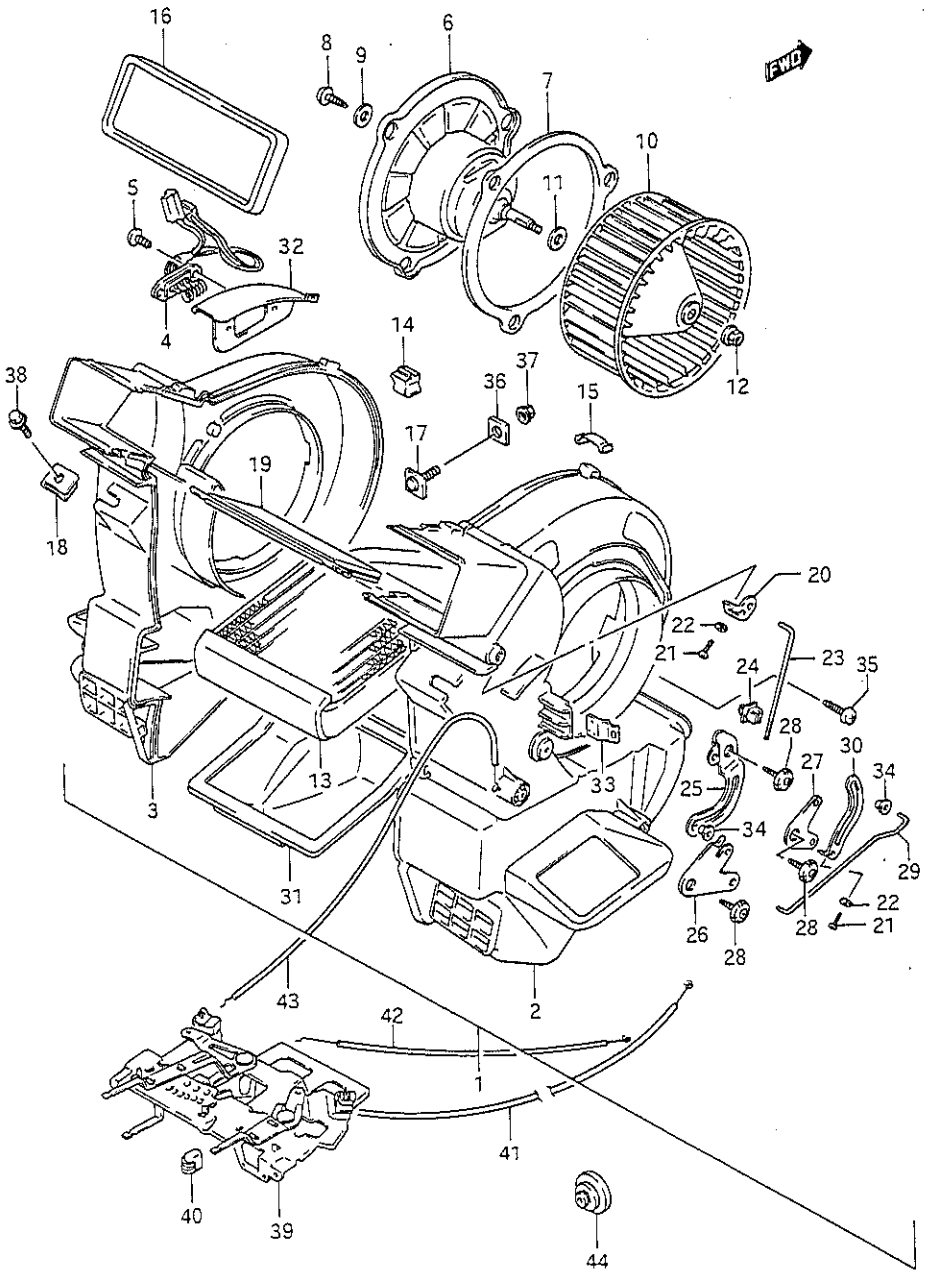

FIG.102(2-C- 8) CAR HEATER

REF.NO.	PART NO.	DESCRIPTION	Q'TY Q/W	Q'TY V	REMARKS
1-1	74100-70A20	HEATER ASSY	1	1	LHD
1-2	74100-70A00	HEATER ASSY	1	1	RHD
2-1	74111-83023	.CASE, heater RH	1	1	LHD
2-2	74111-83003	.CASE, heater RH	1	1	RHD
3-1	74112-83022	.CASE, heater LH	1	1	LHD
3-2	74112-83003	.CASE, heater LH	1	1	RHD
4	74120-83020	.RESISTOR	1	1	
5	03141-04108	.SCREW	1	1	
6	74140-83000	.MOTOR ASSY	1	1	
7	88153-80070	.PACKING	1	1	
8	03212-05169	.SCREW	3	3	
9	08322-21057	.WASHER	3	3	
10-1	74190-83020	.FAN	1	1	LHD
10-2	88140-80070	.FAN	1	1	RHD
11	88196-79000	.WASHER	1	1	
12	08316-26056	.NUT	1	1	
13	74130-83000	.UNIT, heater	1	1	
14	74175-80000	.BUSH	1	1	
15	95495-78000	.SPRING	6	6	
16	74165-83000	.PACKING	1	1	
17	95911-80000	.BRACKET	1	1	
18	74171-80000	.HOLDER	2	2	
19	74113-83000	.DAMPER	1	1	
20	74162-70A00	.LEVER	1	1	
21	02112-03087	.SCREW	2	2	
22	08321-21038	.LOCK WASHER	2	2	
23	74115-70A00	.SHAFT	1	1	
24	74181-70A00	.HOLDER, link	1	1	
25	74191-70A00	.PLATE	1	1	
26	74163-70A00	.LEVER	1	1	
27	74161-70A00	.LEVER	1	1	
28	74118-83000	.SCREW	3	3	
29	74116-70A00	.SHAFT	1	1	
30	74164-70A00	.LEVER	1	1	

SJ413-4 E1

FIG.102

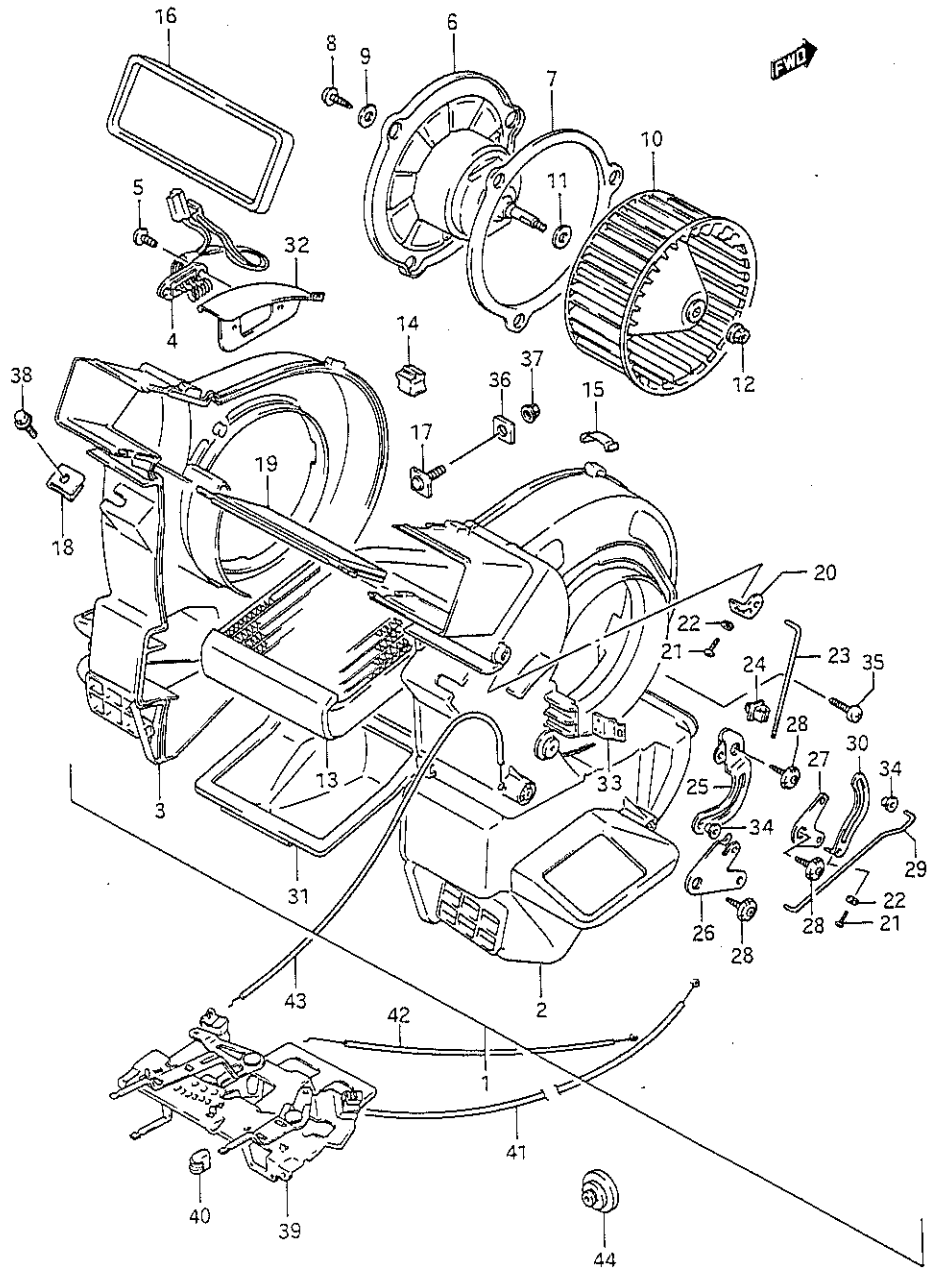

FIG.102(2-C- 9) CAR HEATER

REF.NO.	PART NO.	DESCRIPTION	Q'TY Q/W	Q'TY V	REMARKS
31	74114-83001	.DAMPER	1	1	
32-1	74119-83020	.PLATE	1	1	LHD
32-2	74119-83000	.PLATE	1	1	RHD
33	74151-85000	.CLAMP, lock	1	1	
34	74182-84100	.BUSH	2	2	
35	03511-05166	.SCREW	2	2	
36	74172-80000	PAD, heater	1	1	
37	08316-16086	NUT	1	1	
38	01517-06166	BOLT	2	2	
39	74400-70A00	CONTROL ASSY, ventilator	1	1	
40	74417-70A00-281	KNOB, lever control	4	4	
41-1	74512-83020	WIRE, water valve	1	1	LHD
41-2	74512-83000	WIRE, water valve	1	1	RHD
42-1	74513-70A20	WIRE, CIRC. & fresh	1	1	LHD,W/heater
42-2	74513-70A40	WIRE, CIRC. & fresh	1	1	LHD,N/heater
42-3	74513-83000	WIRE, CIRC. & fresh	1	1	W/heater,W/air con
43	74514-83000	WIRE, room & DEF.	1	1	
44	82191-82000	GROMMET, water valve cable	1	1	

FIG.103

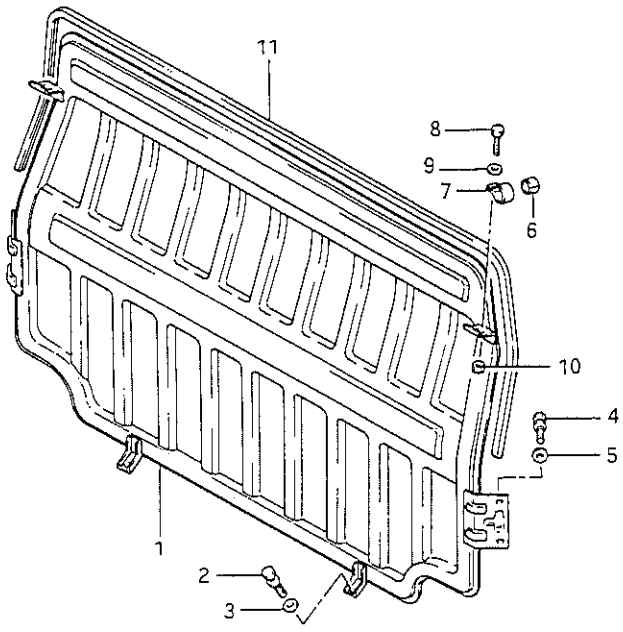

FIG.103(2-C-10) PARTITION PANEL (Q:E20,W:F)

REF.NO.	PART NO.	DESCRIPTION	Q'TY Q/W	REMARKS
1	81250-80000	PANEL, partition	1	2 persons
2-1	09119-06045	BOLT, lower	2	2 persons
2-2	01107-06166	BOLT, lower	2	2 persons
3	08322-21066	WASHER	2	2 persons
4	09125-08011	BOLT, side	4	2 persons
5	08322-21086	WASHER	4	2 persons
6	81262-80000	PAD, clamp	2	2 persons
7	09402-26601	CLAMP	2	2 persons
8	01107-06166	BOLT	2	2 persons
9	08322-21066	WASHER	2	2 persons
10	08316-26066	NUT	2	2 persons
11	81263-80000	TRIM, opening	1	2 persons

SJ413-4 E1

FIG. 104

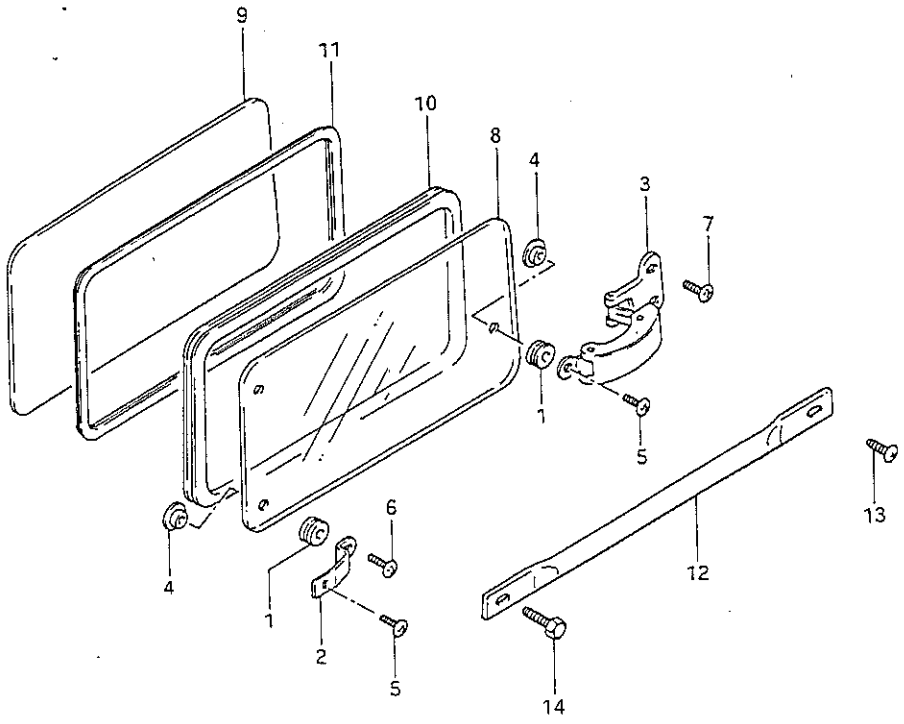

FWD

SJ413-4 E1

FIG.104(2-C-11) SIDE WINDOW (V)

REF.NO.	PART NO.	DESCRIPTION	Q'TY V	REMARKS
1	69275-78200	PAD, window	6	
2	81411-80100	HINGE, window	4	
3	81430-80102	LOCK, window	2	
4	81451-80101	COVER, window	6	
5	02142-05085	SCREW	6	
6	02142-05065	SCREW	4	
7	02142-05167	SCREW	4	
8-1	84561-80112	GLASS, side window (Clear)	2	
8-2	84561-80102	GLASS, side window (Tinted)	2	
9	84565-80100	PANEL, side window	2	E30
10	84621-80101	WEATHERSTRIP	2	
11	84621-80110	WEATHERSTRIP	2	E30
12	81111-83001	BAR, window guard	2	
13	09125-08011	BOLT, window guard	2	
14	09100-12015	BOLT, seat belt (12x22)	2	

SJ413-4 E1

FIG. 105

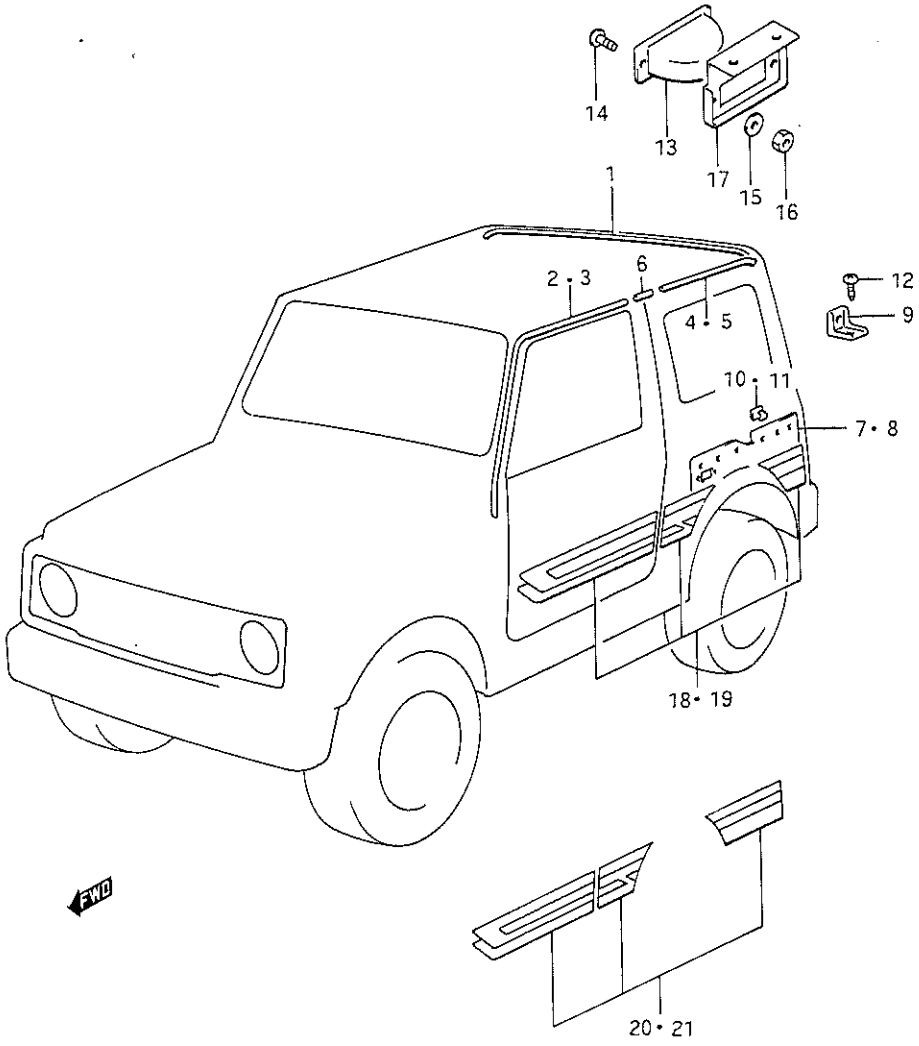

FIG.105(2-C-12) ROOF MOULDING

REF.NO.	PART NO.	DESCRIPTION	Q'TY Q/W	Q'TY V	REMARKS
1	77511-80160	MOULDING, roof rear	-	1	
2	77512-80160	MOULDING, roof front RH	-	1	
3	77513-80160	MOULDING, roof front LH	-	1	
4	77514-80160	MOULDING, roof side RH	-	1	
5	77515-80160	MOULDING, roof side LH	-	1	
6	86492-79521	JOINT, moulding	-	2	
7-1	76110-83000-5GR	TRIM, body inner RH (Brown)	1	-	JX
7-2	76110-83000-5GT	TRIM, body inner RH (Black)	1	-	JX
7-3	76110-80100-5GR	TRIM, body inner RH (Brown)	-	1	JA:E2,E14,E15,E18,E19, E22,E25,E30,E35,E39,E68, E98
7-4	76110-80100-5GT	TRIM, body inner RH (Black)	-	1	JA:E2,E14,E15,E18,E19, E22,E25,E30,E35,E39,E68, E98
7-5	76110-71A00-2AU	TRIM, body inner RH (Brown)	-	1	JX
7-6	76110-71A00-2AS	TRIM, body inner RH (Black)	-	1	JX
7-7	76110-71A10-5GR	TRIM, body inner RH (Brown)	-	1	E54
7-8	76110-71A10-5GT	TRIM, body inner RH (Black)	-	1	E54
7-9	76110-83020-5GR	TRIM, body inner RH (Brown)	1	-	W:JX
7-10	76110-83020-5GT	TRIM, body inner RH (Black)	1	-	W:JX
8-1	76120-83000-5GR	TRIM, body inner LH (Brown)	1	-	JX
8-2	76120-83000-5GT	TRIM, body inner LH (Black)	1	-	JX
8-3	76120-80100-5GR	TRIM, body inner LH (Brown)	-	1	JA:E2,E14,E15,E18,E19, E22,E25,E30,E35,E39,E68, E98
8-4	76120-80100-5GT	TRIM, body inner LH (Black)	-	1	JA:E2,E14,E15,E18,E19, E22,E25,E30,E35,E39,E68, E98
8-5	76120-71A10-2AU	TRIM, body inner LH (Brown)	-	1	JX
8-6	76120-71A10-2AS	TRIM, body inner LH (Black)	-	1	JX
8-7	76120-71A10-5GR	TRIM, body inner LH (Brown)	-	1	E54
8-8	76120-71A10-5GT	TRIM, body inner LH (Black)	-	1	E54
8-9	76120-83020-5GR	TRIM, body inner LH (Brown)	1	-	W:JX
8-10	76120-83020-5GT	TRIM, body inner LH (Black)	1	-	W:JX

SJ413-4 E1

FIG. 105

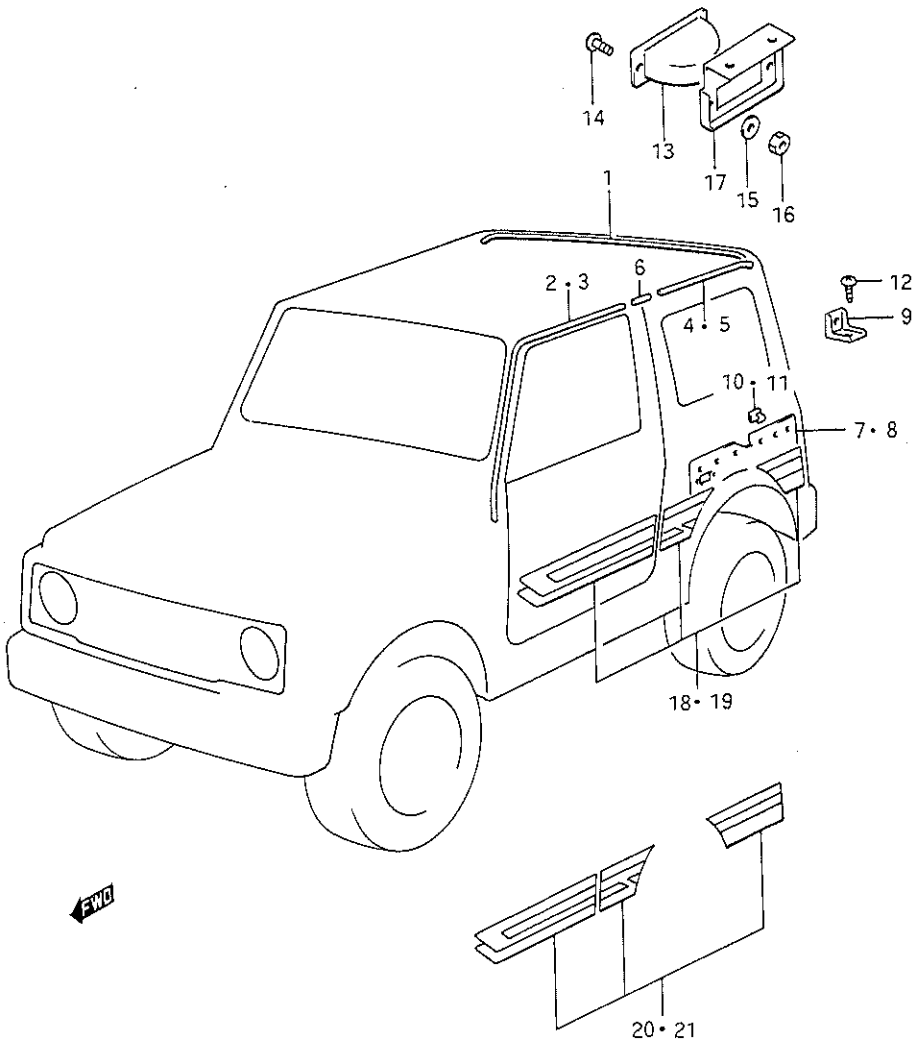

FIG.105(2-C-13) ROOF MOULDING

REF.NO.	PART NO.	DESCRIPTION	Q'TY Q/W	Q'TY V	REMARKS
9-1	76131-83000	STAY, side body trim	1	-	
9-2	76131-83000	STAY, side body trim	3	-	W
10	09409-08303-281	CLIP	13	16	
11-1	09409-10303-5CW	CLIP (Brown)	3	-	W:JX
11-2	09409-10303-281	CLIP (Black)	3	-	W:JX
12-1	03141-06123	SCREW	1	1	
12-2	03141-06123	SCREW	3	-	W
13-1	86370-58140-281	ASHTRAY, rear	1	1	JX
13-2	86370-58140-281	ASHTRAY, rear	1	1	E2,E15,E18,E19,E20,E22, E25,E34,E39,E41,E44,E98
13-3	86370-58140-281	ASHTRAY, rear	2	2	E54
14-1	02122-04128	SCREW	-	2	JX
14-2	02122-04128	SCREW	-	2	E2,E15,E18,E19,E20,E22, E25,E34,E39,E41,E44,E98
14-3	02122-04168	SCREW	4	4	E54
15-1	08322-21047	WASHER	2	2	JX
15-2	08322-21047	WASHER	2	2	E2,E15,E18,E19,E20,E22, E25,E34,E39,E41,E44,E98
16-1	08316-16046	NUT	2	2	JX
16-2	08316-16046	NUT	2	2	E2,E15,E18,E19,E20,E22, E25,E34,E39,E41,E44,E98
16-3	08310-11047	NUT	4	4	E54
17	89821-80000	BRACKET, ashtray	2	-	E54

FIG.105

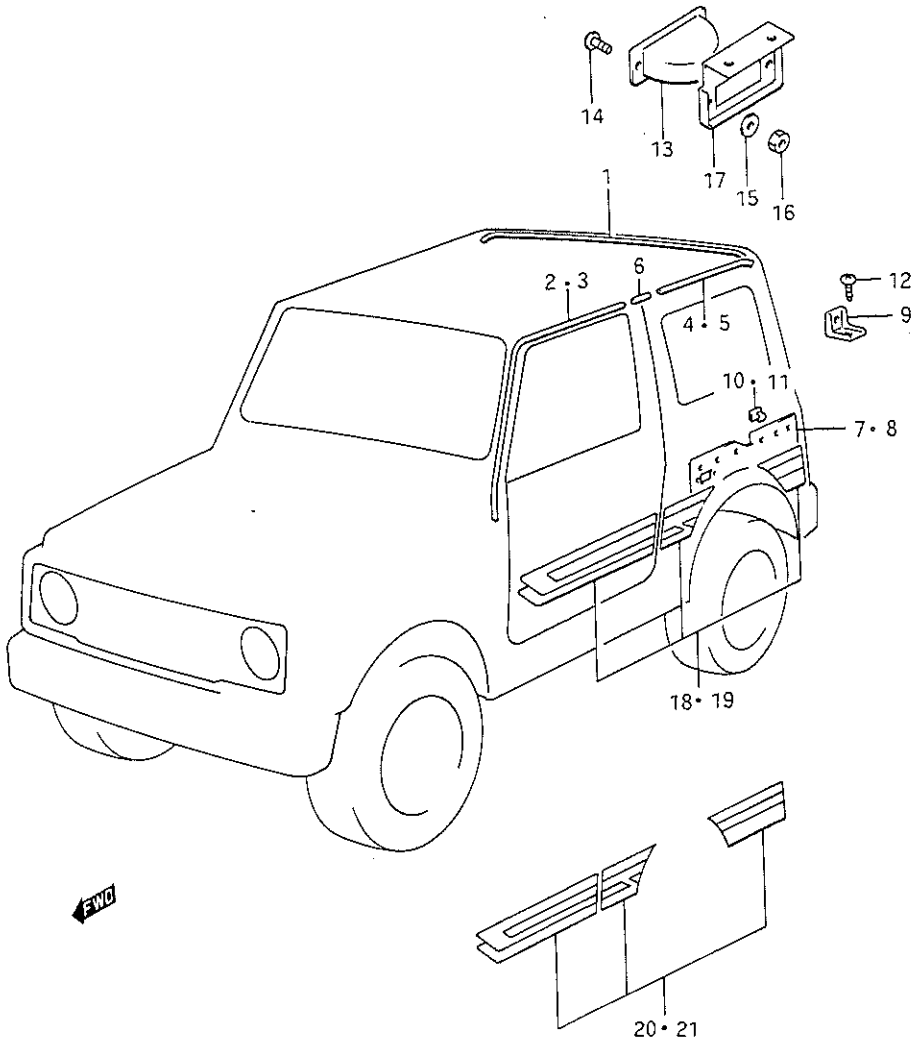

FIG.105(2-C-14) ROOF MOULDING

REF.NO.	PART NO.	DESCRIPTION	Q'TY Q/W	Q'TY V	REMARKS
18-1	77640-70A00-2HL	STRIPE, body RH	1	1	JX
18-2	77640-70A00-2HM	STRIPE, body RH	1	1	JX
18-3	77640-70A00-2HN	STRIPE, body RH	1	1	JX
19-1	77650-70A00-2HL	STRIPE, body LH	1	1	JX
19-2	77650-70A00-2HM	STRIPE, body LH	1	1	JX
19-3	77650-70A00-2HN	STRIPE, body LH	1	1	JX
20-1	77640-74A00-2HL	STRIPE, body RH	1	1	W:JX
20-2	77640-74A00-2HM	STRIPE, body RH	1	1	W:JX
20-3	77640-74A00-2HN	STRIPE, body RH	1	1	W:JX
21-1	77650-74A00-2HL	STRIPE, body LH	1	1	W:JX
21-2	77650-74A00-2HM	STRIPE, body LH	1	1	W:JX
21-3	77650-74A00-2HN	STRIPE, body LH	1	1	W:JX

STRIPE TAPE COLOR
2HL : BLUE+GRAY+WHITE
2HM : PINK+GRAY
2HN : RED+GRAY+WHITE

SJ413-4 E1

FIG. 106

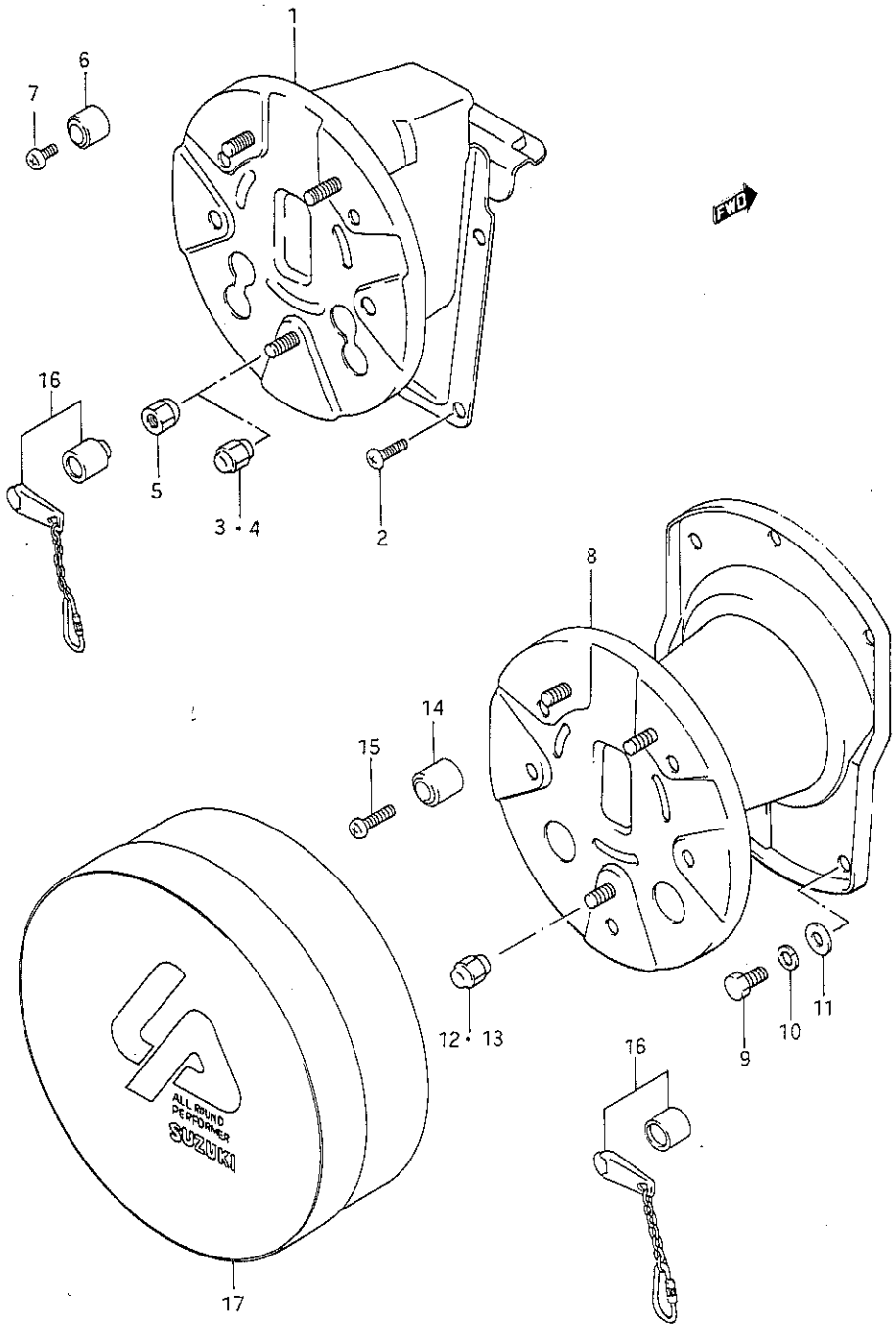

FIG.106(2-C-15) TIRE CARRIER (O,Q,V,W)

REF.NO.	PART NO.	DESCRIPTION	Q'TY Q/W	Q'TY V	REMARKS
1-1	72810-80022	CARRIER, spare tire	1	-	
1-2	72810-83002	CARRIER, spare tire	1	-	W
1-3	72810-80022	CARRIER, spare tire	1	-	W:E16
2	09125-08011	SCREW	6	-	
3	09159-12024	NUT (chrome plated)	3	-	
4	09159-12009	NUT (Yellow)	3	-	
5	09140-12026	NUT	3	-	
6	09320-06006	CUSHION	3	-	
7	02112-06163	SCREW	3	-	
8	83960-83501	CARRIER, spare tire	-	1	
9	01107-10203	BOLT	-	5	
10	08321-21103	LOCK WASHER	-	5	
11	08322-21103	WASHER	-	5	
12	09159-12024	NUT (chrome plated)	-	3	
13	09159-12009	NUT (Yellow)	-	3	
14	09320-06006	CUSHION	-	3	
15	02112-06166	SCREW	-	3	
16	99000-99062-001	NUT SET, spare tire	1	1	E58
17	72880-80011-7BS	COVER, spare tire	1	1	E43

SJ413-4 E1

FIG.107

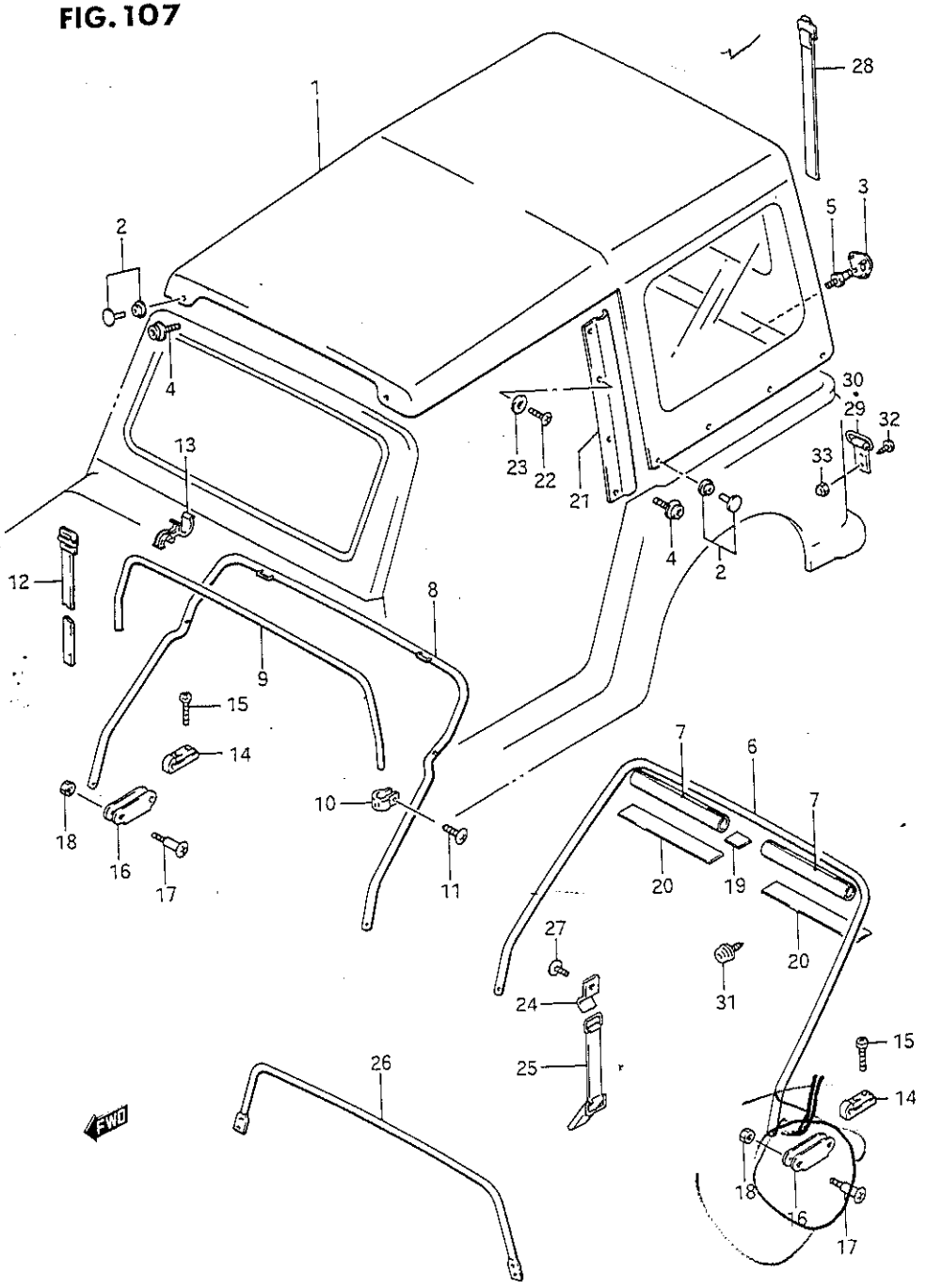

FIG.107(2-D- 2) DECK TOP (Q)

REF.NO.	PART NO.	DESCRIPTION	Q'TY Q	REMARKS
1-1	78310-83114-40U	TOP ASSY, deck (Black)	1	JA
1-2	78310-83114-5ME	TOP ASSY, deck (White)	1	JA
1-3	78310-83124-45R	TOP ASSY, deck (Gray)	1	JA
1-4	78310-83044-40U	TOP ASSY, deck (Black)	1	JA(2 persons)
1-5	78310-83044-5ME	TOP ASSY, deck (White)	1	JA(2 persons)
1-6	78310-83074-45R	TOP ASSY, deck (Gray)	1	JA(2 persons)
1-7	78310-83214-5BA	TOP ASSY, deck (Brown)	1	JX
1-8	78310-83214-5MF	TOP ASSY, deck (White)	1	JX
1-9	78310-83214-55M	TOP ASSY, deck (Black)	1	JX
1-10	78310-83431-5BA	TOP ASSY, deck (Brown)	1	JX:E16(2 persons)
1-11	78310-83431-5MF	TOP ASSY, deck (White)	1	JX:E16(2 persons)
1-12	78310-83431-55M	TOP ASSY, deck (Black)	1	JX:E16(2 persons)
1-13	78310-83074-55M	TOP ASSY, deck (Black)	1	JX:E27(2 persons)
1-14	78310-83074-5MF	TOP ASSY, deck (White)	1	JX:E27(2 persons)
1-15	78310-83074-45R	TOP ASSY, deck (Gray)	1	JX:E27(2 persons)
2	79100-63860	.HOOK SET (Chrome)	12	
3	79133-63041	.SNAP	4	
4	78491-80011	HOOK MALE, front & side	12	
5	79134-73002	HOOK MALE, rear	4	
6	78470-80001	FRAME, top bow rear	1	
7	78482-80301	CUSHION, top bow	2	
8	78470-80011	FRAME, top bow rear	1	E22,E39
9	78461-80010	FRAME, top bow middle	1	E22,E39
10	78465-80010	STAY, top bow middle	2	E22,E39
11	03241-05255	SCREW	2	E22,E39
12	78490-80010	BAND, rear top bow	2	E22,E39
13	09408-00036	CLIP	1	E22,E39
14	78481-80000	MALE, top bow hinge	2	
15	02112-06303	SCREW	4	
16-1	78485-80000	FEMALE, top bow hinge	2	
16-2	78485-80221	FEMALE, top bow hinge	2	E16
17	78488-80000	PIN, hinge	4	
18	08313-11066	NUT	4	
19	78476-80002	PAD	1	

SJ413-4 E1

FIG. 107

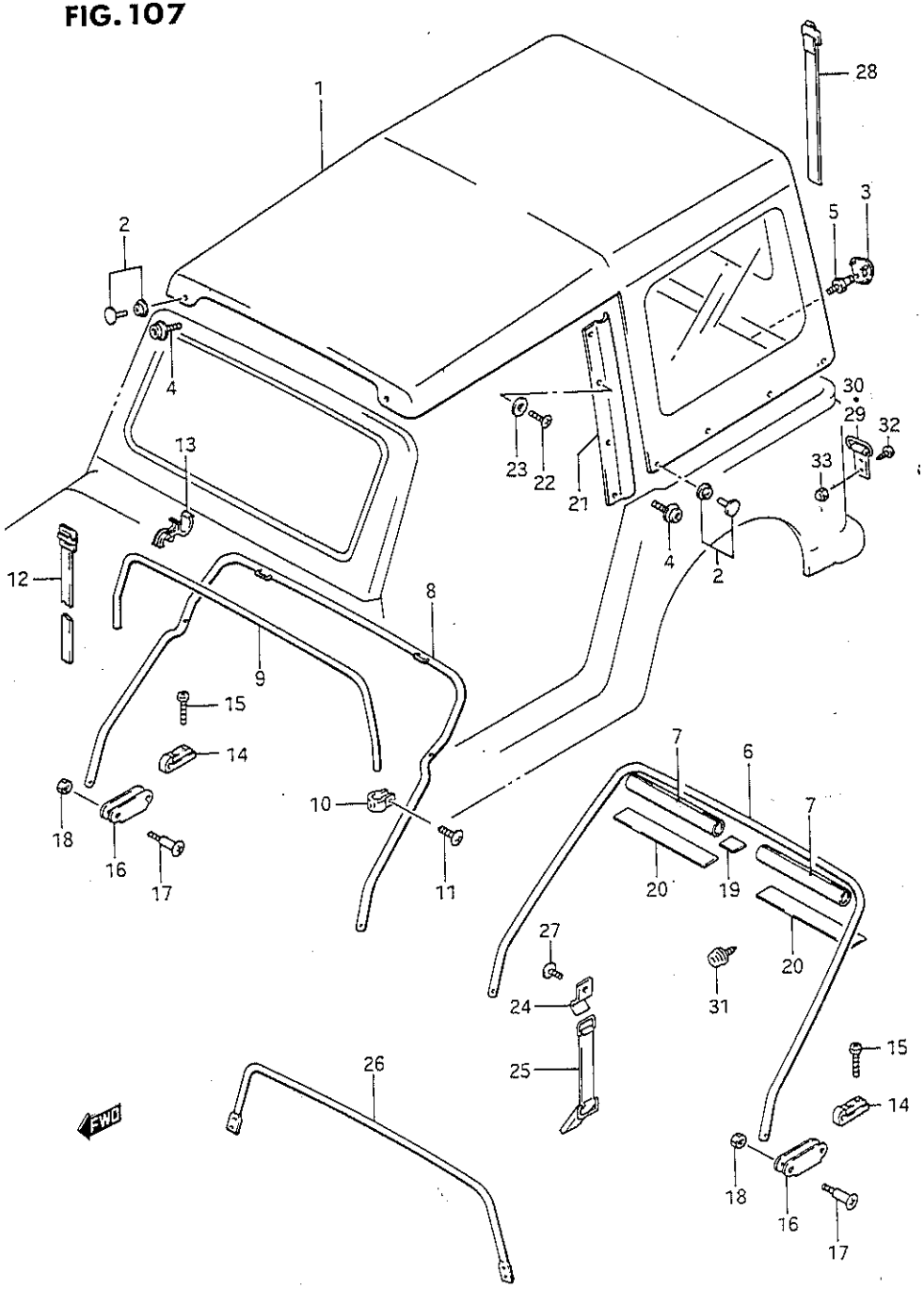

FIG.107(2-D- 3) DECK TOP (Q)

REF.NO.	PART NO.	DESCRIPTION	Q'TY Q	REMARKS
20	78484-80300	SHEET, cushion topbow	2	
21	78411-80101	RAIL, deck top side	2	
22	02142-06103	SCREW	8	
23	09161-04011	WASHER	4	
24	76421-80001	HOOK, top bow	2	
25	09462-00040	BAND, top bow	2	
26	78461-80220	FRAME, top bow front	1	E16
27	02142-05083	SCREW	2	
28	78490-83000-5EB	BAND, tension	2	
29	78415-83001	BRACKET, tension band RH	1	
30	78416-83000	BRACKET, tension band LH	1	
31	78491-83000	MALE, top bow frame	5	
32	02142-06103	SCREW	1	
33	09159-06049	NUT	2	

SJ413-4 E1

FIG. 108

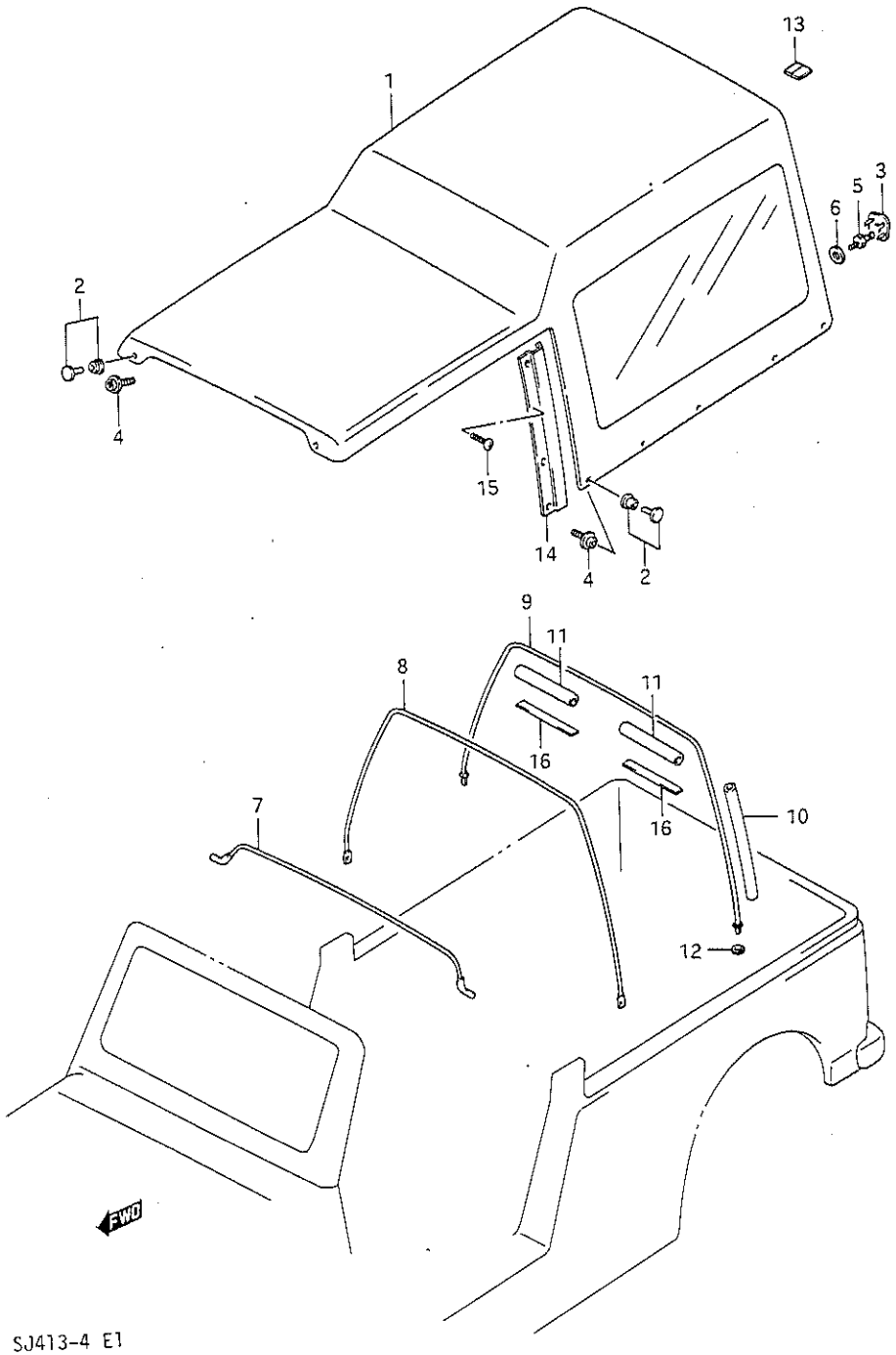

SJ413-4 E1

FIG.108(2-D- 4) DECK TOP (W:C)

REF.NO.	PART NO.	DESCRIPTION	Q'TY W	REMARKS
1-1	78310-83343-45R	DECK ASSY, top (Gray)	1	
1-2	78310-83353-5ME	DECK ASSY, top (White)	1	
1-3	78310-83353-40U	DECK ASSY, top (Black)	1	
1-4	78310-83480-5ME	DECK ASSY, top (White)	1	E39
1-5	78310-83480-40U	DECK ASSY, top (Black)	1	E39
2	79100-63860	.HOOK SET (Chrome)	16	
3	79133-63041	.SNAP	4	
4	78491-80011	HOOK MALE, front & side	16	
5	79134-73002	HOOK MALE, rear	4	
6	09161-04011	WASHER	4	
7	78510-80300	FRAME, top bow front	1	
8	78481-80340	FRAME, top bow front	1	
9	78470-80341	FRAME, top bow	1	
10	78482-80301	CUSHION, top bow	2	
11	78483-80301	CUSHION, top bow upper	4	
12	78445-80001	CUSHION, center pillor	2	
13	78476-80002	PAD, rear top bow	1	
14	78411-80101	RAIL, deck top side	2	
15	02142-06103	SCREW	8	
16	78484-80300	SHEET, chshion top bow	6	

Note : F see next fig.

SJ413-4 E1

FIG.109

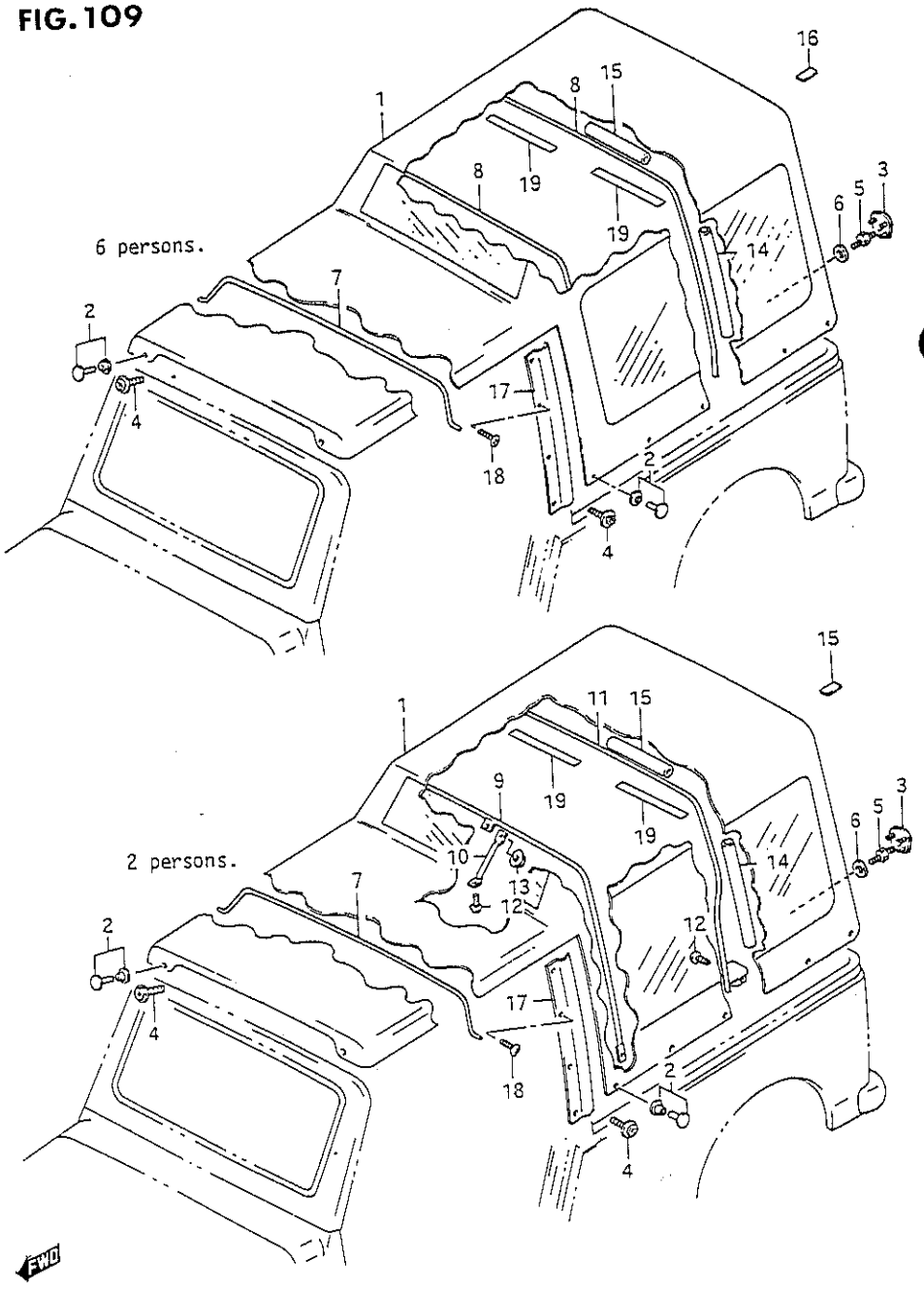

FIG.109(2-D- 5) DECK TOP (W:F)

REF.NO.	PART NO.	DESCRIPTION	Q'TY W	REMARKS
1-1	78310-83313-45R	DECK ASSY, top (Gray)	1	
1-2	78310-83303-5ME	DECK ASSY, top (White)	1	
1-3	78310-83303-40U	DECK ASSY, top (Black)	1	
1-4	78310-83460-45R	DECK ASSY, top (Gray)	1	E16
1-5	78310-83470-5ME	DECK ASSY, top (White)	1	E16
1-6	78310-83470-40U	DECK ASSY, top (Black)	1	E16
2	79100-63860	.HOOK SET	16	
3	79133-63041	.SNAP	4	
4	78491-80011	HOOK MALE, front & side	16	
5	79134-73002	HOOK MALE, rear	4	
6	09161-04011	WASHER	4	
7	78510-80300	FRAME, top bow front	1	
8	78471-80300	FRAME, top bow	2	6 persons
9	78460-80330	FRAME, top bow front	1	2 persons
10	78463-80330	FRAME, top bow front cross	1	2 persons
11	78470-80330	FRAME, top bow center	1	2 persons
12	02142-06127	SCREW	4	2 persons
13	08313-11067	NUT	1	2 persons
14	78482-80301	CUSHION, top bow side	2	
15	78483-80301	CUSHION, top bow upper	4	
16	78476-80002	PAD, rear top bow	1	
17	78411-80101	RAIL, deck top side	2	
18	02142-06106	SCREW	8	
19	78484-80300	SHEET, cushion top bow	6	

SJ413-4 E1

FIG.110

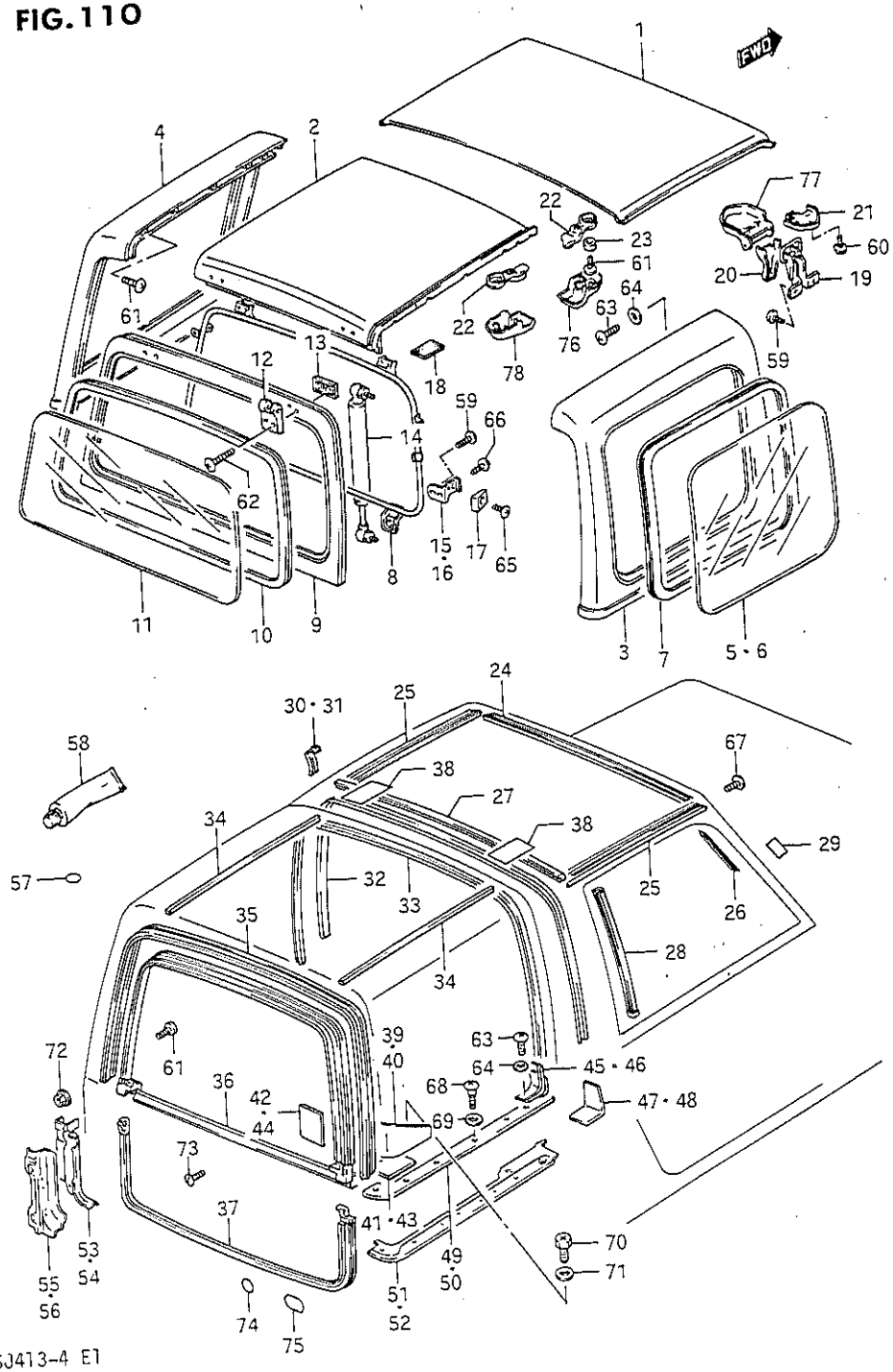

SJ413-4 E1

FIG.110(2-D- 6) RESIN TOP (Q)

REF.NO.	PART NO.	DESCRIPTION	Q'TY Q	REMARKS
1-1	93611-80011-55P	RESIN TOP, front roor (White)	1	
1-2	93611-80011-55R	RESIN TOP, front roof (Black)	1	
2-1	93651-80011-55P	RESIN TOP, rear roof (White)	1	
2-2	93651-80011-55R	RESIN TOP, rear roof (Black)	1	
3-1	93711-80011-55P	RESIN TOP, side RH (white)	1	
3-2	93711-80011-55R	RESIN TOP, side RH (Black)	1	
4-1	93721-80011-55P	RESIN TOP, side LH (White)	1	
4-2	93721-80011-55R	RESIN TOP, side LH (Black)	1	
5-1	93731-80010	GLASS, side RH (Clear)	1	
5-2	93731-80020	GLASS, side RH (Tinted)	1	
6-1	93732-80010	GLASS, side LH (Clear)	1	
6-2	93732-80020	GLASS, side LH (Tinted)	1	
7	93733-80012	WEATHERSTRIP, side window	2	
8	93750-80021	REINF, back door	1	
9-1	93751-80012-55P	RESIN TOP, back door (White)	1	
9-2	93751-80012-55R	RESIN TOP, back door (Black)	1	
10	93784-80012	WEATHERSTRIP, back window	1	
11-1	93783-80010	GLASS, back window (Clear)	1	
11-2	93783-80020	GLASS, back window (Tinted)	1	
11-3	93783-80030	GLASS, back window (Clear)	1	W/defogger
11-4	93783-80040	GLASS, back window (Tinted)	1	W/defogger
12	93760-80011	HINGE, back door	2	
13	93765-80010	RETAINER, hinge	2	
14	93670-80011	BARANCER, back door	2	
15	93795-80021	STAY, back stopper RH	1	
16	93796-80021	STAY, back stopper LH	1	
17	93798-80020	STOPPER, back door	2	
18	93793-80010	SEAL, rear side & roof	2	
19-1	93620-80010	LOCK, front roof	4	
19-2	93620-80020	LOCK, front roof	4	F.25
20	93627-80013	COVER, front roof lock	4	
21	93631-80010	HOOK, front roof lock	4	
22	93635-80010	LEVER, roof lock	2	

SJ413-4 E1

FIG.110

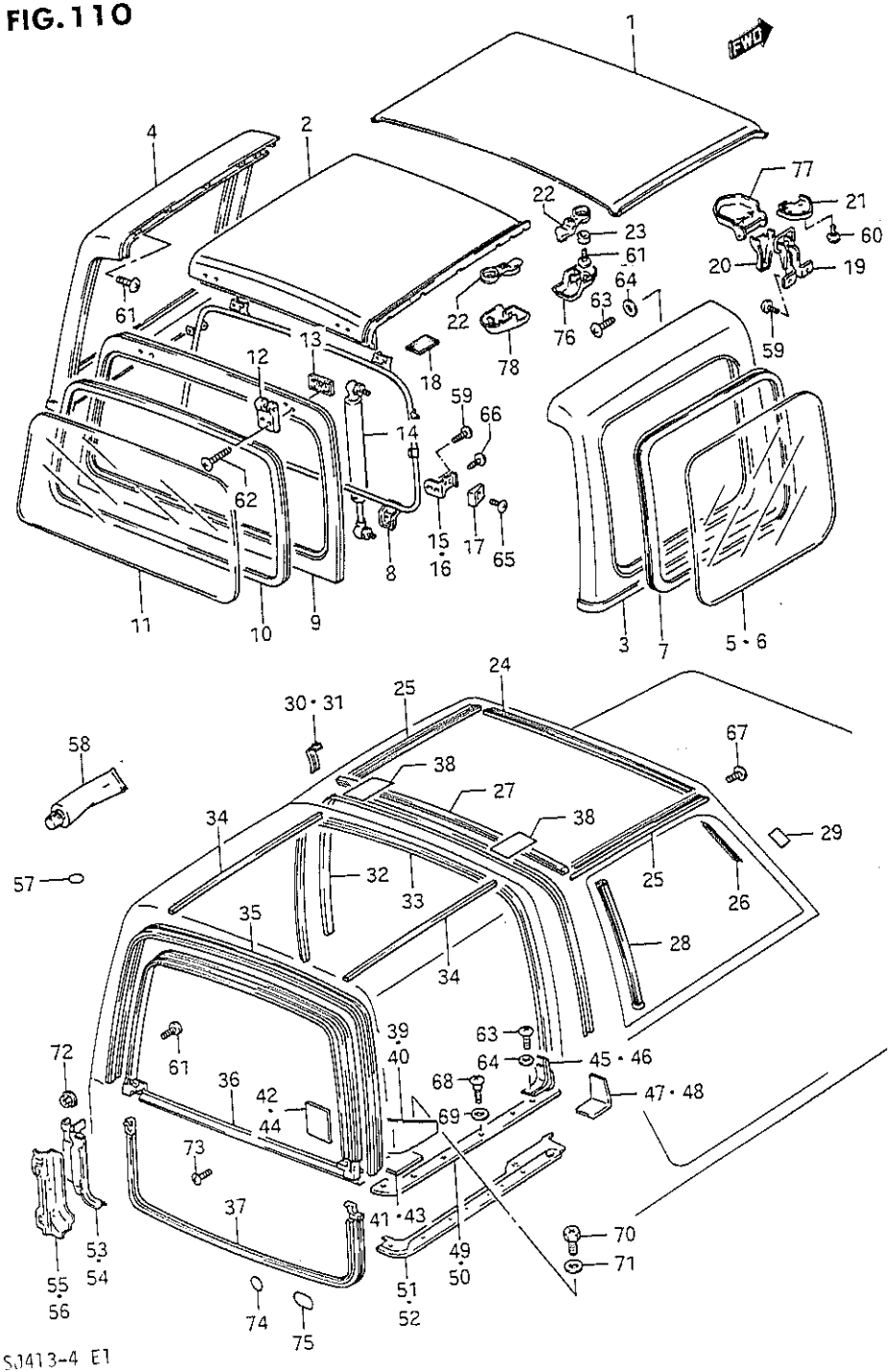

SJ413-4 E1

FIG.110(2-D- 7) RESIN TOP (Q)

REF.NO.	PART NO.	DESCRIPTION	Q'TY Q	REMARKS
23	09180-06027	SPACER (6.1x8x5.2)	2	
24	93640-80011	WEATHERSTRIP, roof front	1	
25	93642-80011	WEATHERSTRIP, roof side	2	
26	93645-80010	SEAL, roof side front rail	2	
27	93740-80011	WEATHERSTRIP, roof rear	1	
28	93630-80010	TRIM, EXT side opening	2	
29	93791-80010	SEAL, front pillar	1	
30	93636-80010	TRIM, EXT side RH	1	
31	93637-80010	TRIM, EXT side LH	1	
32	93767-80010	WEATHERSTRIP, RR body front	1	
33	93771-80012	WEATHERSTRIP, rear front	1	
34	93661-80010	WEATHERSTRIP, rear side	2	
35	93775-80011	TRIM, back door open	1	
36	93780-80012	WEATHERSTRIP, back door	1	
37	93770-80012	WEATHERSTRIP, rear gate open	1	
38	93792-80011	SEAL, ext side	2	
39	93670-80023	BRACKET, balancer RH	1	
40	93680-80023	BRACKET, balancer LH	1	
41	93675-80020	PAD, balancer lower RH	1	
42	93676-80020	PAD, balancer upper RH	1	
43	93685-80020	PAD, balancer lower LH	1	
44	93686-80020	PAD, balancer upper LH	1	
45	93779-80011	PLATE, side front RH	1	
46	93776-80011	PLATE, side front LH	1	
47	93717-80011	WEATHERSTRIP, lower RH	1	
48	93718-80011	WEATHERSTRIP, lower LH	1	
49	93772-80010	WEATHERSTRIP, side RH	1	
50	93773-80010	WEATHERSTRIP, side LH	1	
51	64230-80502	PANEL, side upper RH	1	
52	64630-80502	PANEL, side upper LH	1	

SJ413-4 E1

FIG.110

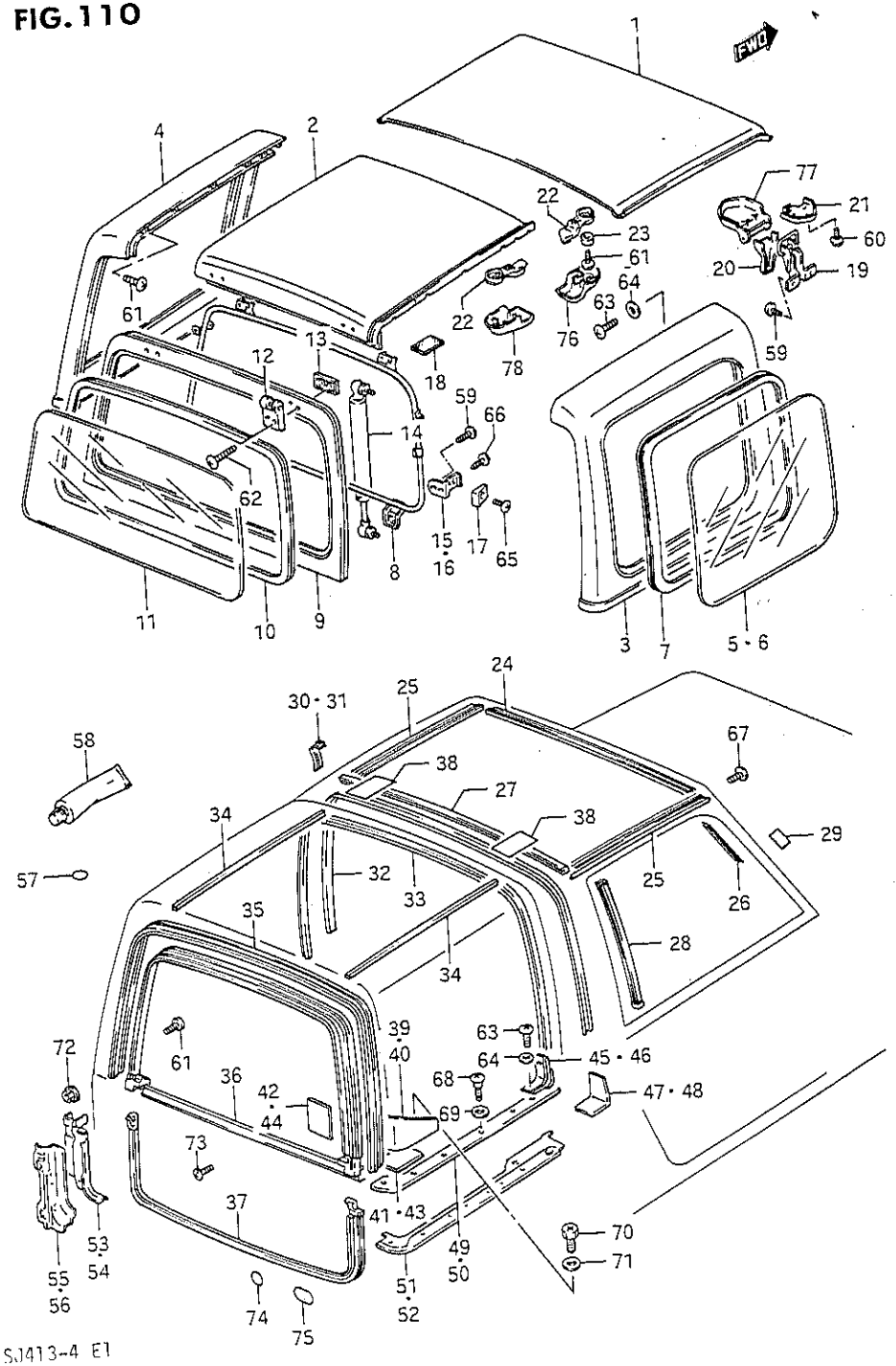

SJ413-4 E1

FIG.110(2-D- 8) RESIN TOP (Q)

REF.NO.	PART NO.	DESCRIPTION	Q'TY Q	REMARKS
53	63310-80001	PANEL, rear pillar inner RH	1	
54	63710-80001	PANEL, rear pillar inner LH	1	
55	64311-80001	PANEL, rear pillar outer RH	1	
56	64710-80001	PANEL, rear pillar outer LH	1	
57	73953-80000	FILM, resin top	16	
58	99000-31050	SEAL, resin top	1	
59	02142-06104	SCREW	14	
60	09132-05023	SCREW	12	
61	09132-05023	SCREW	12	
62	09125-06055	SCREW	8	
63	02142-06205	SCREW	14	
64	09160-06039	WASHER (6.5x18x1.6)	10	
65	02112-06125	SCREW	2	
66	03241-06105	SCREW	10	
67	02142-05083	SCREW	2	
68	09139-06038	SCREW, hard top under	6	
69	09161-08011	WASHER, hard top under	6	
70	09128-06023	SCREW	4	
71	08322-21064	WASHER	4	
72	08361-25063	NUT	4	
73	02142-04083	SCREW	4	
74	67627-70000	FILM, spare tire	6	
75	93797-80010	FILM, rear gate	3	
76	93632-80010	COVER, front roof lock No.2	1	E25
77	93634-80010	COVER, front roof lock No.1	4	E25
78	93633-80010	COVER, rear roof lock	1	E25

SJ413-4 E1

FIG.111

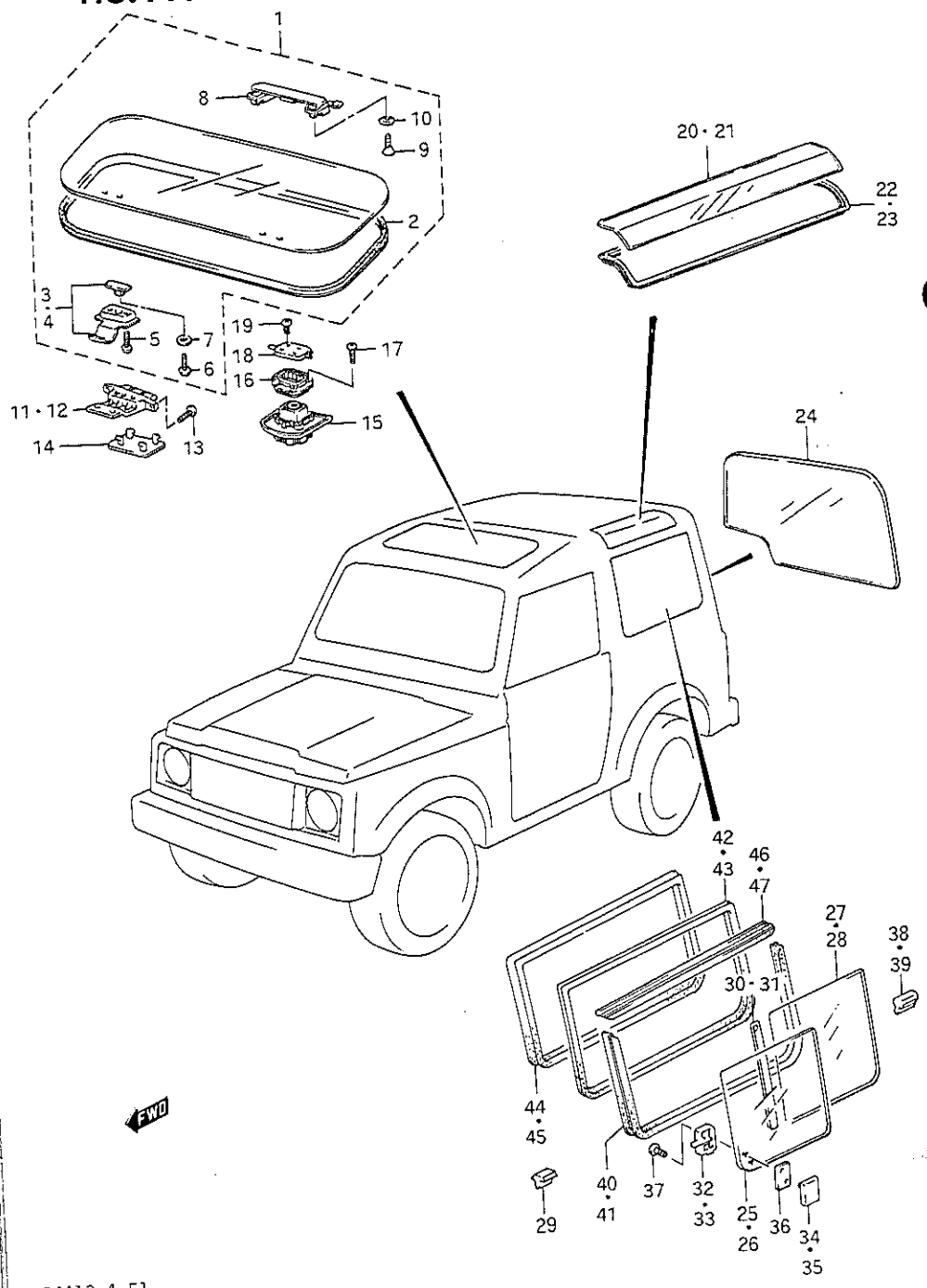

SJ413-4 E1

FIG.111(2-D- 9) RESIN TOP No.1 (W)

REF.NO.	PART NO.	DESCRIPTION	Q'TY W	REMARKS
1	93600-83000	GLASS ASSY, front roof lid	1	
2	93858-83000	.WEATHERSTRIP, roof lid outer	1	
3	93640-83000-281	.HINGE, roof lid male RH	1	
4	93650-83000-281	.HINGE, roof lid male LH	1	
5	02122-05126	..SCREW	2	
6	02142-05083	..SCREW	4	
7	08322-21053	..WASHER	4	
8	93690-83000-281	.LOCK, roof lid sliding	1	
9	02132-06253	..SCREW	2	
10	08323-31066	..WASHER	2	
11	93660-83000-281	HINGE, roof lid female RH	1	
12	93670-83000-281	HINGE, roof lid female LH	1	
13	02142-05164	SCREW, roof lid hinge	4	
14	93844-83000-4GF	COVER, roof lid hinge hole	2	
15	93680-83000-281	REGULATOR ASSY, roof lid	1	
16	93710-83000	REGULATOR, roof lid	1	
17	03131-05255	SCREW, regulator set plate	4	
18	93720-83000	CATCH, roof lid	1	
19	02132-05124	SCREW, lock plate	4	
20	93836-83000	GLASS, rear side upper RH	1	
21	93837-83000	GLASS, rear side upper LH	1	
22	93870-83010	MOLDING, rear side upper RH	1	
23	93880-83010	MOLDING, rear side upper LH	1	
24	93838-83050	GLASS, back door	1	

SJ413-4 E1

FIG.111

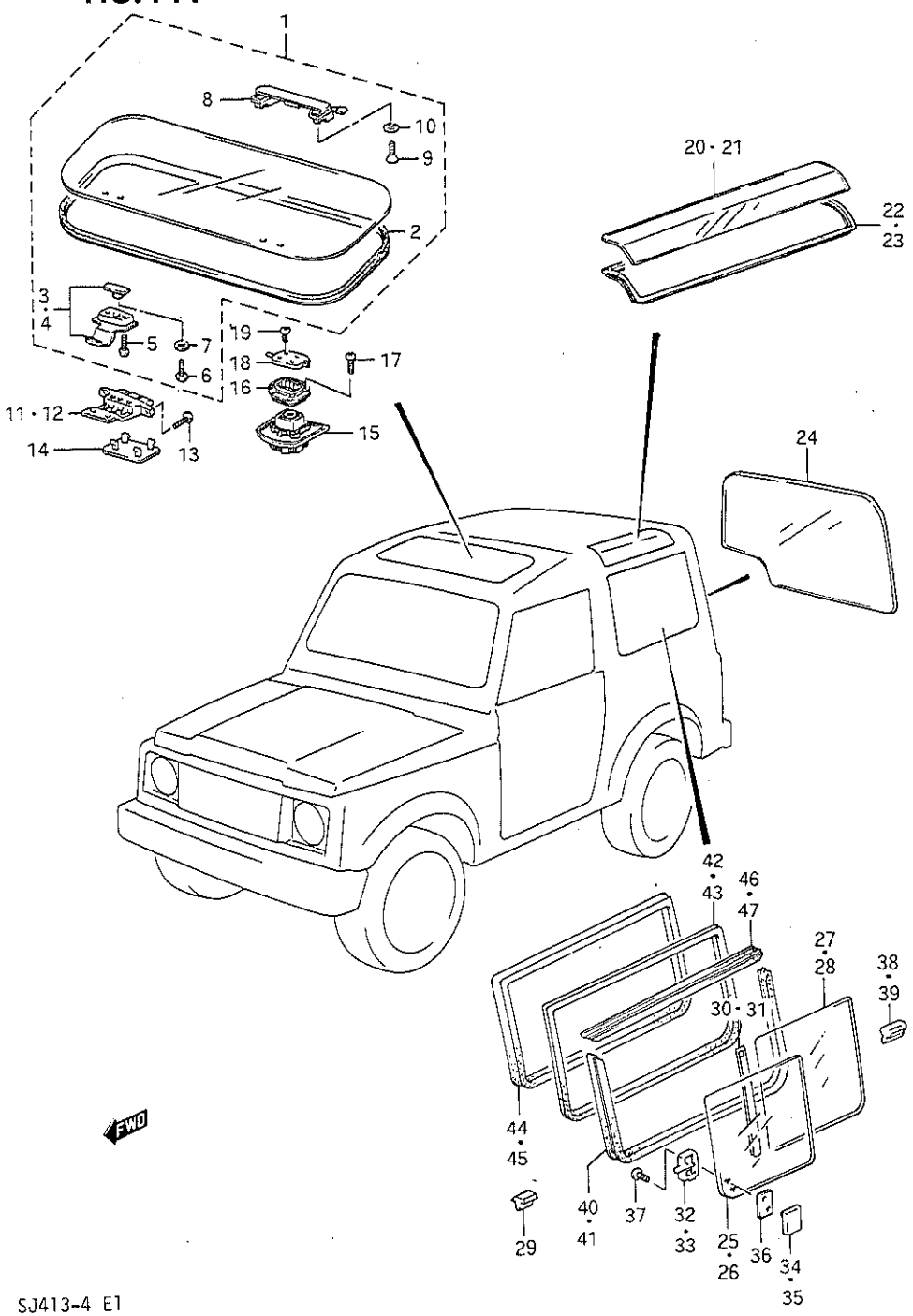

SJ413-4 E1

FIG.111(2-D-10) RESIN TOP No.1 (W)

REF.NO.	PART NO.	DESCRIPTION	Q'TY W	REMARKS
25	93832-83010	GLASS, rear side front RH	1	
26	93833-83010	GLASS, rear side front LH	1	
27	93834-83010	GLASS, rear side rear RH	1	
28	93835-83010	GLASS, rear side rear LH	1	
29	93853-83000	STOPPER, rear side front	2	
30	93852-83000	SCALP, window glass RH	1	
31	93852-83010	SCALP, window glass LH	1	
32	69170-79501	LOCK, rear side window RH	1	
33	69180-79501	LOCK, rear side window LH	1	
34	69175-79502	COVER, RH	1	
35	69185-79502	COVER, LH	1	
36	69176-79500	PACKIN	2	
37	02132-04205	SCREW, window lock	4	
38	93854-83000	STOPPER, rear side rear RH	1	
39	93864-83000	STOPPER, rear side rear LH	1	
40	93851-83001	RUN, rear side window RH	1	
41	93861-83001	RUN, rear side window LH	1	
42	93810-83000	SASH, rear side window RH	1	
43	93820-83000	SASH, rear side window LH	1	
44	93870-83001	WEATHERSTRIP, window RH	1	
45	93880-83001	WEATHERSTRIP, window LH	1	
46	93871-83000	RUN, rear side window RH	1	
47	93872-83000	RUN, rear side window LH	1	

SJ413-4 E1

FIG.112

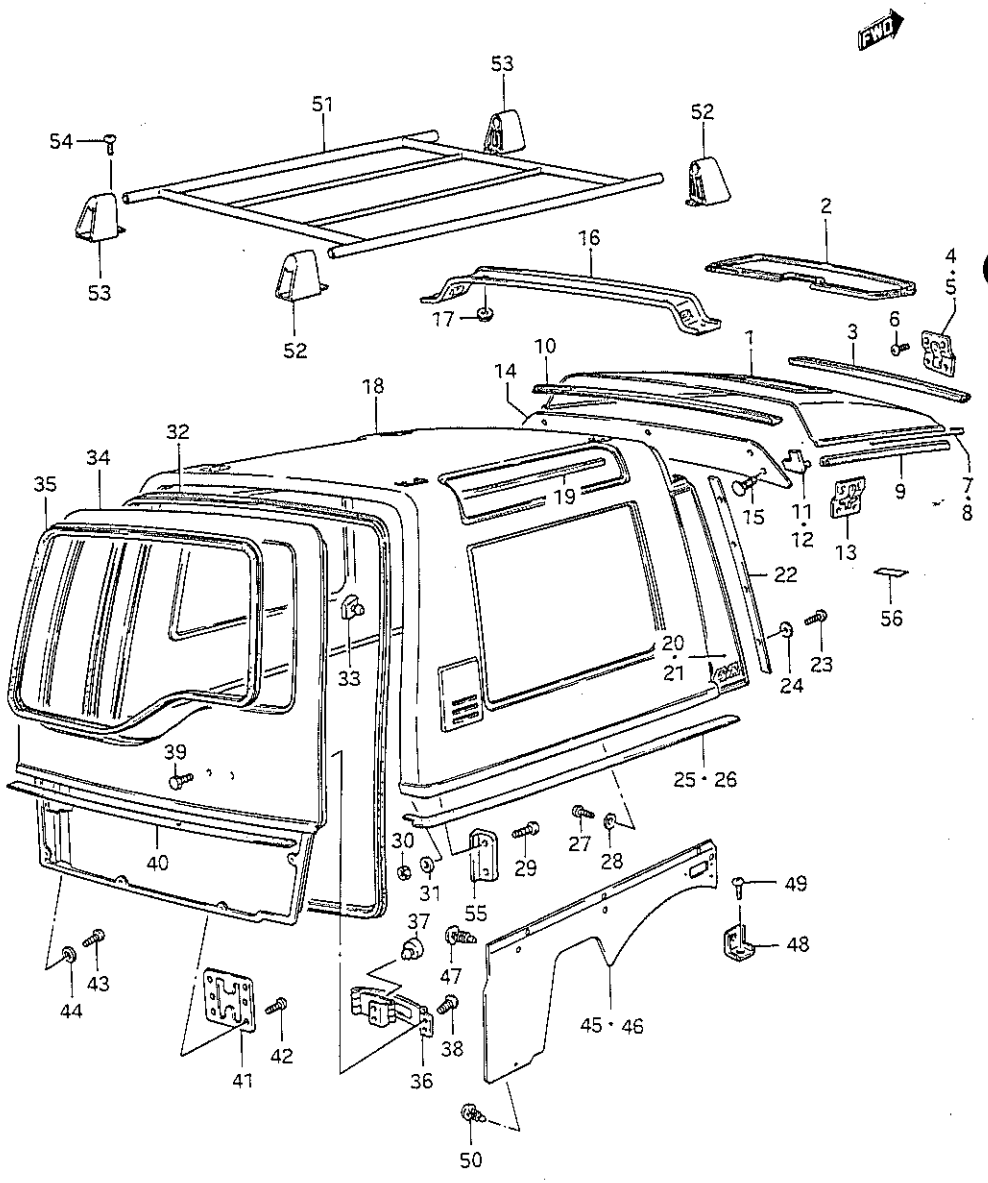

SJ413-4 E1

FIG.112(2-D-11) RESIN TOP No.2 (W)

REF.NO.	PART NO.	DESCRIPTION	Q'TY W	REMARKS
1-1	93610-83001-2HA	PANEL, front roof	1	White/Beige
1-2	93610-83001-8C1	PANEL, front roof	1	Gray/Beige
2	93857-83000	WEATHERSTRIP, roof lid inner	1	
3	93640-80011	WEATHERSTRIP, front roof front	1	
4	93841-83000	STAY, front roof front RH	1	
5	93842-83000	STAY, front roof front LH	1	
6	02142-06104	SCREW, front roof	16	
7	93774-83000	WEATHERSTRIP, CTR PLR EXT No.1	2	
8	93775-83000	WEATHERSTRIP, CTR PLR EXT No.2	2	
9	93642-83000	WEATHERSTRIP, front roof side	2	
10	93776-83000	WEATHERSTRIP, rear roof front	1	
11	93643-83010	WEATHERSTRIP, front roof side rear RH	1	
12	93644-83010	WEATHERSTRIP, front roof side rear LH	1	
13	93843-83000	STAY, front roof side	2	
14	93760-83000-4FK	TRIM, rear upper	1	
15	09409-10302-4GF	CLIP, trim	6	
16	65791-83000	EXTENSION, upper	1	
17	08316-26066	NUT	3	
18-1	93620-83010-2HA	PANEL, rear roof (White/Beige)	1	
18-2	93620-83010-8C1	PANEL, rear roof (Gray/Beige)	1	
19	93855-83001	WEATHERSTRIP, rear side upper	4	
20-1	93628-83010-2HP	STRIPING, RH	1	White/Gray/Red
20-2	93628-83010-2HR	STRIPING, RH	1	Blue/Gray/Red
20-3	93628-83010-8RJ	STRIPING, RH	1	Gray/Gray/Gray
20-4	93628-83010-8RK	STRIPING, RH	1	Blue/Gray/Gray
20-5	93628-83010-9DN	STRIPING, RH	1	Turquoise/Gray/Gray
21-1	93629-83010-2HP	STRIPING, LH	1	White/Gray/Red
21-2	93629-83010-2HR	STRIPING, LH	1	Blue/Gray/Red
21-3	93629-83010-8RJ	STRIPING, LH	1	Gray/Gray/Gray
21-4	93629-83010-8RK	STRIPING, LH	1	Blue/Gray/Gray
21-5	93629-83010-9DN	STRIPING, LH	1	Turquoise/Gray/Gray

SJ413-4 F1

FIG.112

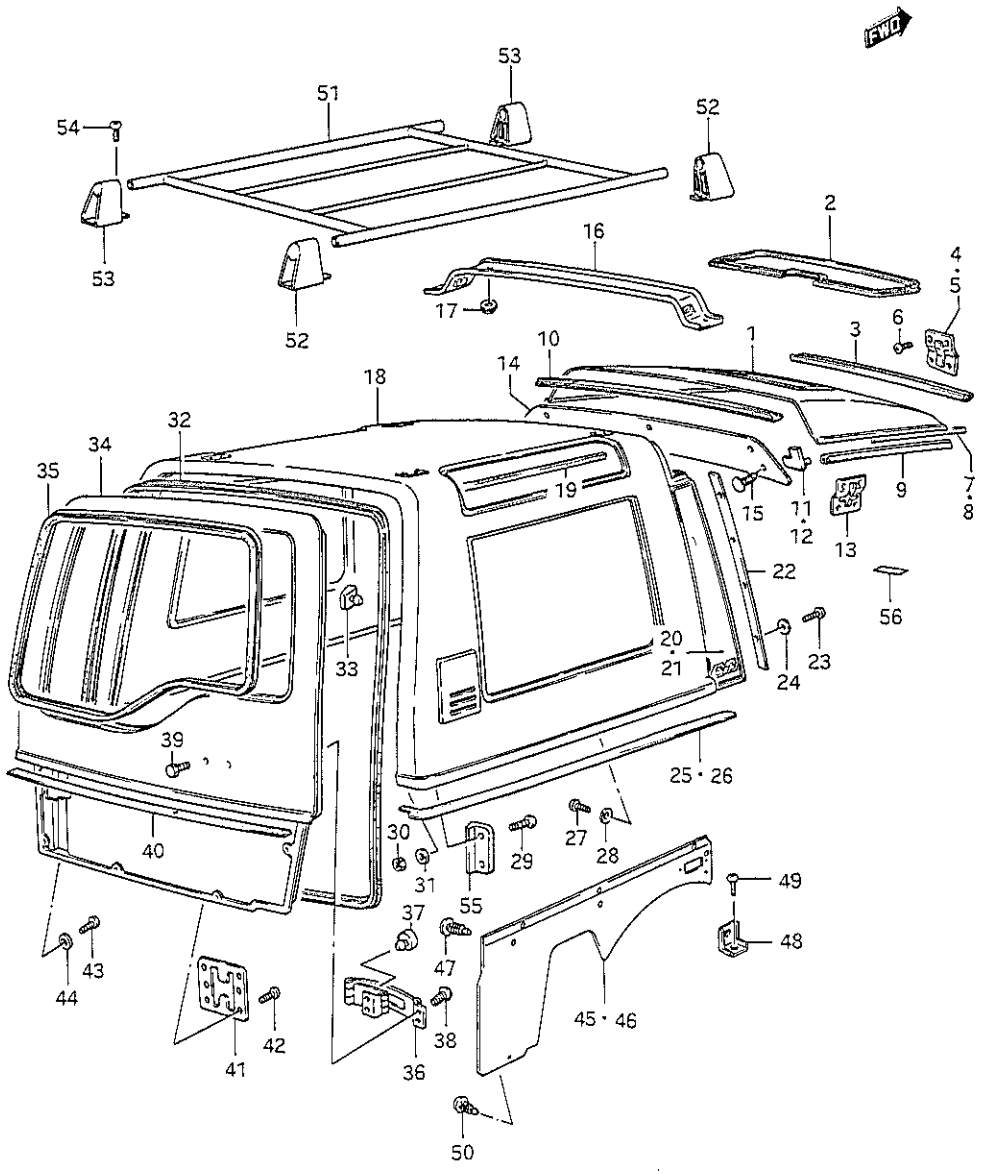

FIG.112(2-D-12) RESIN TOP No.2 (W)

REF.NO.	PART NO.	DESCRIPTION	Q'TY W	REMARKS
22	93778-83000	WEATHERSTRIP, CTR PLR EXT No.3	2	
23	02112-06205	SCREW	4	
24	09160-06039	WASHER	4	
25	93772-83000	WEATHERSTRIP, body side RH	1	
26	93773-83000	WEATHERSTRIP, body side LH	1	
27	02142-06205	SCREW	8	
28	09160-06039	WASHER	8	
29	02142-06253	SCREW, back door stopper	4	
30	08310-11063	NUT	4	
31	08322-21063	WASHER	4	
32	84680-83000	WEATHERSTRIP, back door opening	1	
33	93779-83001	STOPPER, door upper side	2	
34-1	93630-83011-2HA	PANEL, back door upper (White/Beige)	1	
34-2	93630-83011-8CT	PANEL, back door upper (Gray/Beige)	1	
35	93733-83000	WEATHERSTRIP, back door glass	1	
36	67790-83000	HINGE, back door upper	1	
37	67796-83000	CUSHION, hinge stop	1	
38	09125-08010	SCREW, hinge	4	
39	01107-08165	BOLT	3	
40	93777-83000	WEATHERSTRIP, back door	1	
41	93845-83010	PLATE, back door	1	
42	02142-06205	SCREW, back door plate	6	
43	02142-06205	SCREW, back door inner	7	
44	09160-06039	WASHER	7	
45-1	93740-83000-5GR	TRIM, rear side RH (Brown)	1	
45-2	93740-83000-5GT	TRIM, rear side RH (Black)	1	
46-1	93750-83000-5GR	TRIM, rear side LH (Brown)	1	
46-2	93750-83000-5GT	TRIM, rear side LH (Black)	1	
47	09409-10302-4GF	CLIP, rear side trim upper	6	
48	76131-83000	STAY, side body trim	5	
49	03141-06126	SCREW, stay trim	5	

SJ413-4 E1

FIG.112

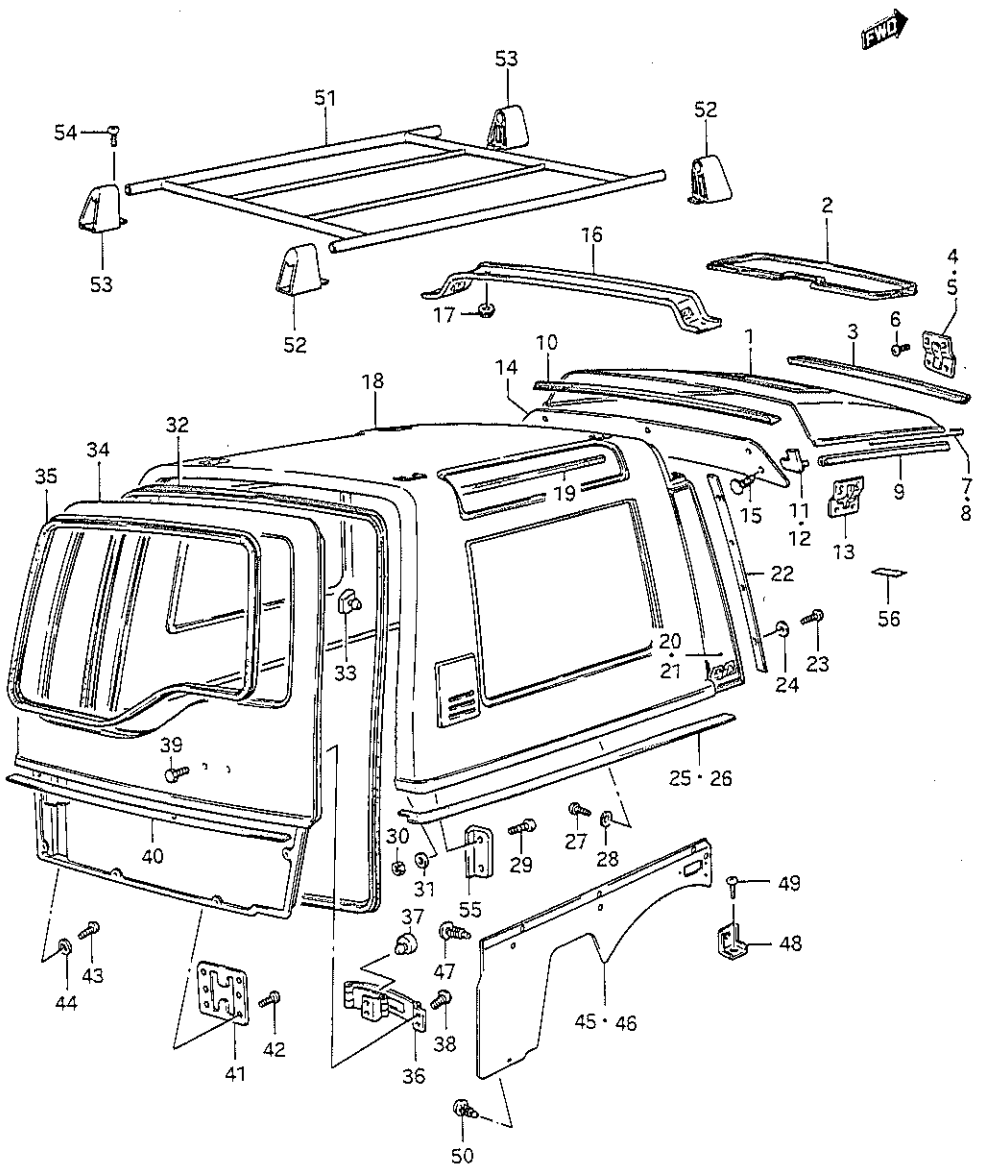

FIG.112(2-D-13) RESIN TOP No.2 (W)

REF.NO.	PART NO.	DESCRIPTION	Q'TY W	REMARKS
50-1	09409-10303-5CW	CLIP, trim lower (Brown)	9	
50-2	09409-10303-281	CLIP, trim lower (Black)	9	
51	93110-83001-281	CARRIER, roof	1	
52	93313-83000-281	SUPPORT, roof carrier RH	2	
53	93314-83000-281	SUPPORT, roof carrier LH	2	
54	02142-06164	SCREW	8	
55	93867-83010	STOPPER, back door	2	
56	93791-80010	SEAL, front pillar	2	

SJ413-4 E1

FIG.113

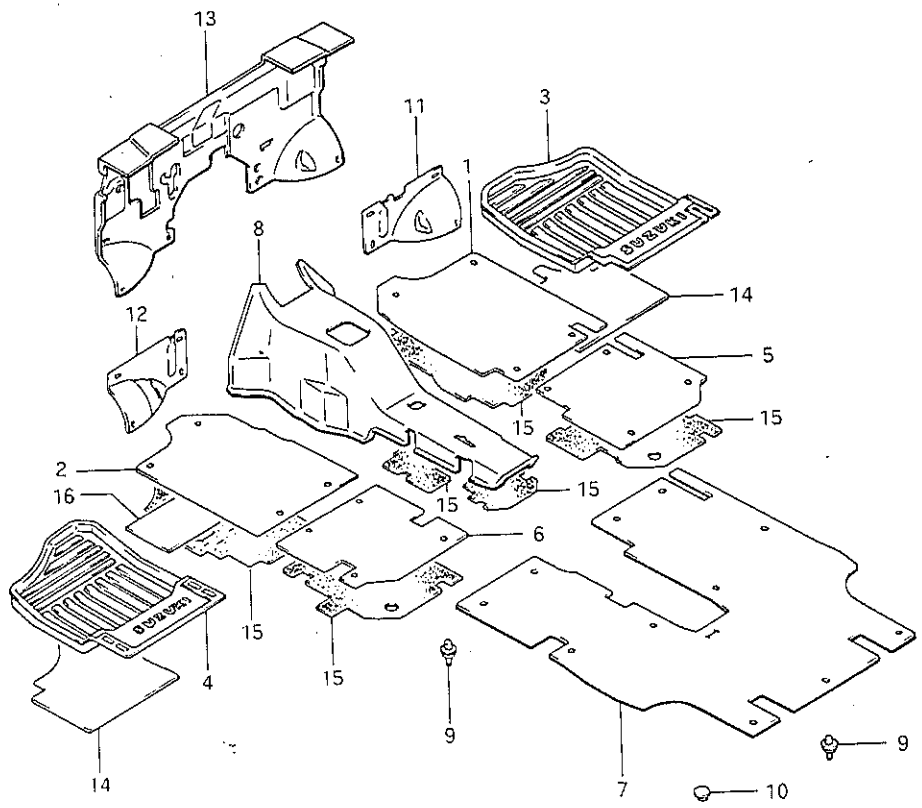

FIG.113(2-D-14) FLOOR MAT AND CARPET (Q,V:JA)

REF.NO.	PART NO.	DESCRIPTION	Q'TY Q	Q'TY V	REMARKS
1-1	75110-83040-5GP	MAT, front floor RH	1	1	LHD
1-2	75110-83040-5JP	MAT, front floor RH	1	1	LHD
1-3	75110-83000-5GP	MAT, front floor RH	1	1	RHD
1-4	75110-83000-5JP	MAT, front floor RH	1	1	RHD
2-1	75120-83010-5GP	MAT, front floor LH	1	1	LHD
2-2	75120-83010-5JP	MAT, front floor LH	1	1	LHD
2-3	75120-83040-5GP	MAT, front floor LH	1	1	RHD
2-4	75120-83040-5JP	MAT, front floor LH	1	1	RHD
3	75511-83031-488	TRAY, front floor RH	1	1	E18,E22,E39
4	75521-83002-488	TRAY, front floor LH	1	1	E18,E22,E39
5-1	75130-83190-5GP	MAT, center floor RH	1	-	LHD(2 persons)
5-2	75130-83190-5JP	MAT, center floor RH	1	-	LHD(2 persons)
5-3	75130-83200-5GP	MAT, center floor RH	-	1	LHD(2 persons)
5-4	75130-83200-5JP	MAT, center floor RH	-	1	LHD(2 persons)
5-5	75130-83010-5GP	MAT, center floor RH	1	-	RHD(2 persons)
5-6	75130-83010-5JP	MAT, center floor RH	1	-	RHD(2 persons)
5-7	75130-83090-5GP	MAT, center floor RH	-	1	RHD(2 persons)
5-8	75130-83090-5JP	MAT, center floor RH	-	1	RHD(2 persons)
6-1	75140-83020-5GP	MAT, center floor LH	1	-	LHD(2 persons)
6-2	75140-83020-5JP	MAT, center floor LH	1	-	LHD(2 persons)
6-3	75140-83100-5GP	MAT, center floor RH	-	1	LHD(2 persons)
6-4	75140-83100-5JP	MAT, center floor LH	-	1	LHD(2 persons)
6-5	75140-83160-5GP	MAT, center floor LH	1	-	RHD(2 persons)
6-6	75140-83160-5JP	MAT, center floor LH	1	-	RHD(2 persons)
6-7	75140-83170-5GP	MAT, center floor LH	-	1	RHD(2 persons)
6-8	75140-83170-5JP	MAT, center floor LH	-	1	RHD(2 persons)

COLOR
5GP : Brown
5JP : Black

SJ413-4 E1

FIG. 113

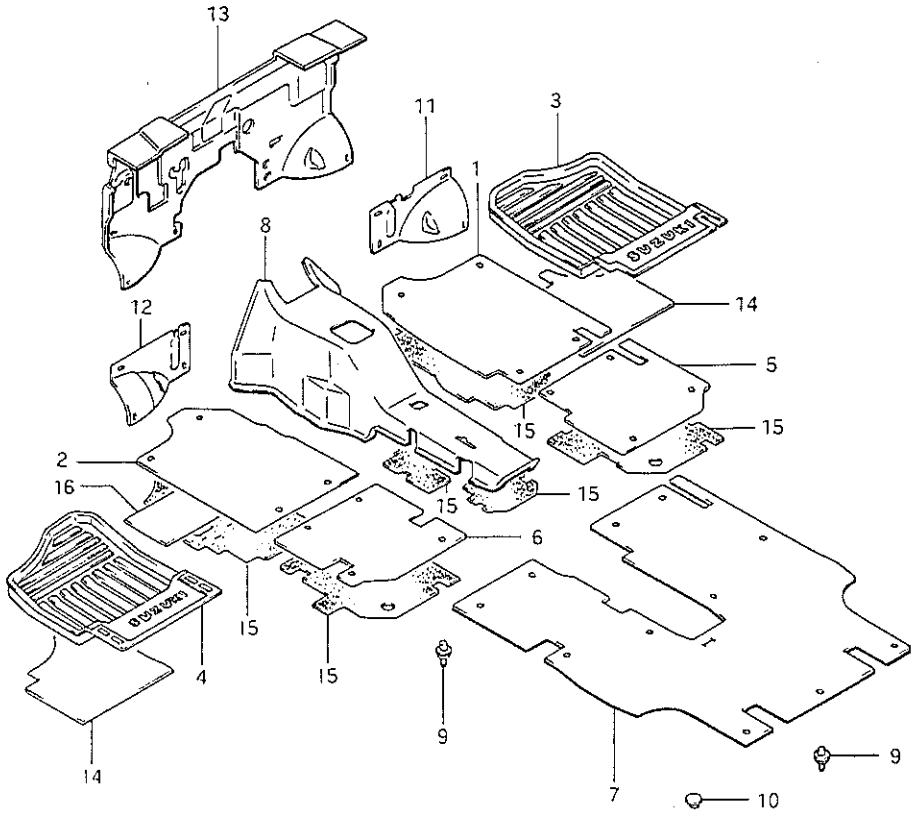

FIG.113(2-D-15) FLOOR MAT AND CARPET (Q,V:JA)

REF.NO.	PART NO.	DESCRIPTION	Q'TY Q	Q'TY V	REMARKS
7-1	75170-80410-5GP	MAT, rear froor	1	-	LHD
7-2	75170-80410-5JP	MAT, rear floor	1	-	LHD
7-3	75170-80400-5GP	MAT, rear floor	1	-	RHD
7-4	75170-80400-5JP	MAT, rear floor	1	-	RHD
7-5	75170-83700-5GP	MAT, rear floor	-	1	LHD
7-6	75170-83700-5JP	MAT, rear floor	-	1	LHD
7-7	75170-83690-5GP	MAT, rear floor	-	1	RHD
7-8	75170-83690-5JP	MAT, rear floor	-	1	RHD
8-1	75150-83020-5GP	MAT, floor tunnel	1	-	LHD
8-2	75150-83020-5JP	MAT, floor tunnel	1	-	LHD
8-3	75150-83190-5GP	MAT, floor tunnel	-	1	LHD
8-4	75150-83190-5JP	MAT, floor tunnel	-	1	LHD
8-5	75150-83010-5GP	MAT, floor tunnel	1	-	RHD
8-6	75150-83010-5JP	MAT, floor tunnel	1	-	RHD
8-7	75150-83180-5GP	MAT, floor tunnel	-	1	RHD
8-8	75150-83180-5JP	MAT, floor tunnel	-	1	RHD
8-9	75150-83220-5GP	MAT, floor tunnel	-	1	E14
8-10	75150-83220-5JP	MAT, floor tunnel	-	1	E14
8-11	75150-83230-5GP	MAT, floor tunnel	-	1	E15
8-12	75150-83230-5JP	MAT, floor tunnel	-	1	E15
9	09410-00067	HOOK MALE	23	23	
10	09250-06004	CAP, rear wheel house	4	4	
11-1	75211-83010-281	SILENCER, dash panel RH	1	-	LHD
11-2	75211-83000-281	SILENCER, dash panel RH	1	-	RHD
12-1	75221-83010-281	SILENCER, dash panel LH	1	-	LHD
12-2	75221-83000-281	SILENSER, dash panel LH	1	-	RHD
13-1	75240-83011	SILENCER, dash panel	-	1	LHD
13-2	75240-83001	SILENCER, dash panel	-	1	RHD
14-1	75250-83001	SILENCER, front floor RH	-	1	
14-2	75260-83001	SILENCER, front floor LH	-	1	
15	99000-73571	SILENCER, floor (570x900)	AR	AR	
16	75231-80000	PAD, front floor LH	1	1	LHD

FIG.114

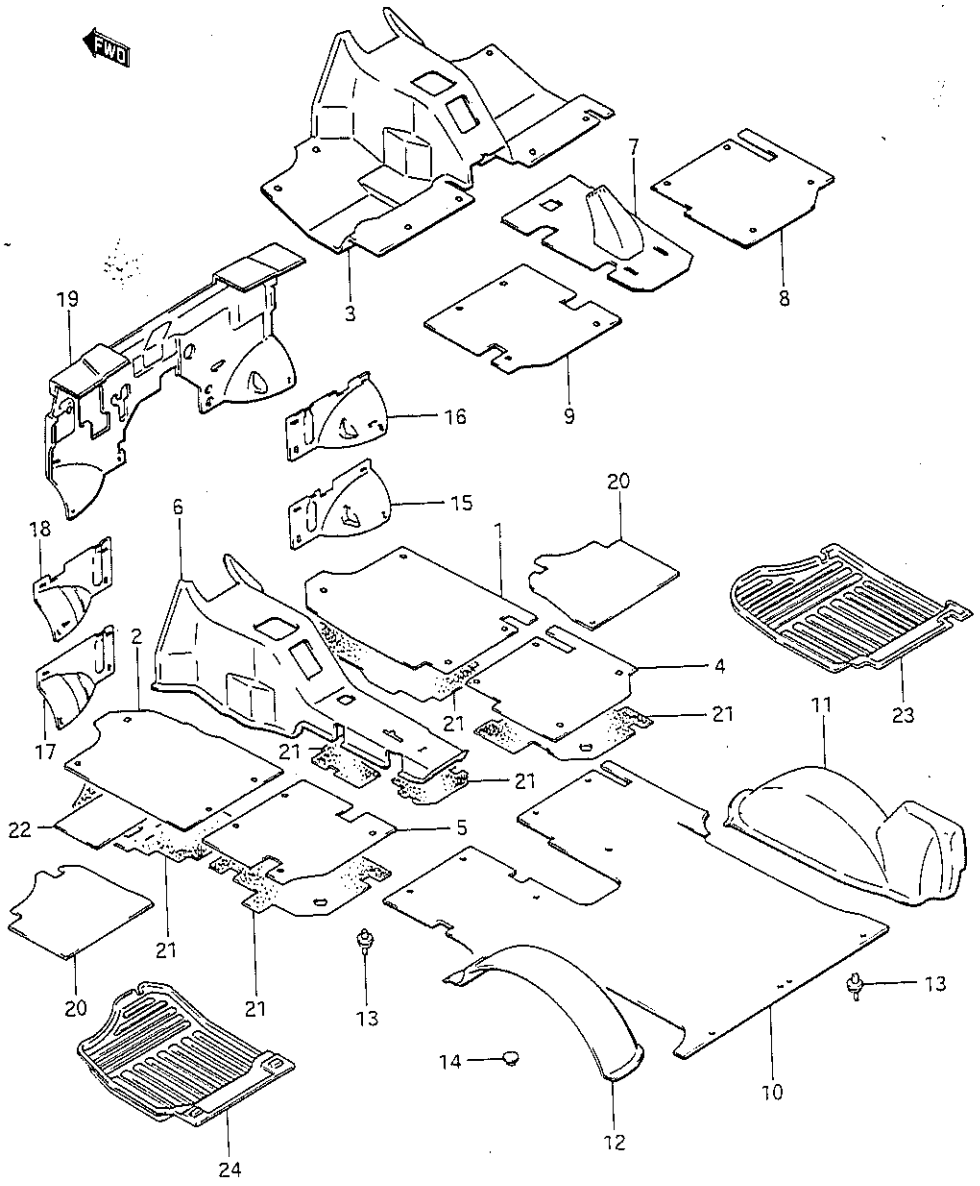

SJ413-4 E1

FIG.114(2-E- 2) FLOOR MAT AND CARPET (Q,V:JX)

REF.NO.	PART NO.	DESCRIPTION	Q'TY Q	V	REMARKS
1-1	75110-83051-5GP	MAT, FR floor RH	1	-	LHD
1-2	75110-83051-5JP	MAT, FR floor RH	1	-	LHD
1-3	75110-83021-5GP	MAT, FR floor RH	1	-	RHD
1-4	75110-83021-5JP	MAT, FR floor RH	1	-	RHD
2-1	75120-83031-5GP	MAT, FR floor LH	1	-	LHD
2-2	75120-83031-5JP	MAT, FR floor LH	1	-	LHD
2-3	75120-83051-5GP	MAT, FR floor LH	1	-	RHD
2-4	75120-83051-5JP	MAT, FR floor LH	1	-	RHD
3-1	75150-83261-5JR	CARPET, FL tunnel front	1	-	E27
3-2	75150-83301-5JS	CARPET, FL tunnel front	-	1	LHD
3-3	75150-83301-5JR	CARPET, FL tunnel front	-	1	LHD
3-4	75150-83291-5JS	CARPET, FL tunnel front	-	1	RHD
3-5	75150-83291-5JR	CARPET, FL tunnel front	-	1	RHD
4-1	75130-83181-5GP	MAT, center floor RH	1	-	E16,E25,E44(2 persons)
4-2	75130-83181-5JP	MAT, center floor RH	1	-	E16,E25,E44(2 persons)
4-4	75130-83071-5GP	MAT, center floor RH	1	-	E20(2 persons)
4-5	75130-83071-5JP	MAT, center floor RH	1	-	E20(2 persons)
5-1	75140-83061-5GP	MAT, center floor LH	1	-	E16,E25,E44(2 persons)
5-2	75140-83061-5JP	MAT, center floor LH	1	-	E16,E25,E44(2 persons)
5-3	75140-83181-5GP	MAT, center floor LH	1	-	E20(2 persons)
5-4	75140-83181-5JP	MAT, center floor LH	1	-	E20(2 persons)
6-1	75150-83040-5GP	MAT, floor tunnel	1	-	LHD
6-2	75150-83040-5JP	MAT, floor tunnel	1	-	LHD
6-3	75150-83030-5GP	MAT, floor tunnel	1	-	RHD
6-4	75150-83030-5JP	MAT, floor tunnel	1	-	RHD
6-5	75150-83080-5GP	MAT, floor tunnel	1	-	E15
6-6	75150-83080-5JP	MAT, floor tunnel	1	-	E15

COLOR
5GP : Brown
5JP : Black
5JS : Brown
5JR : Black

SJ413-4 E1

FIG.114

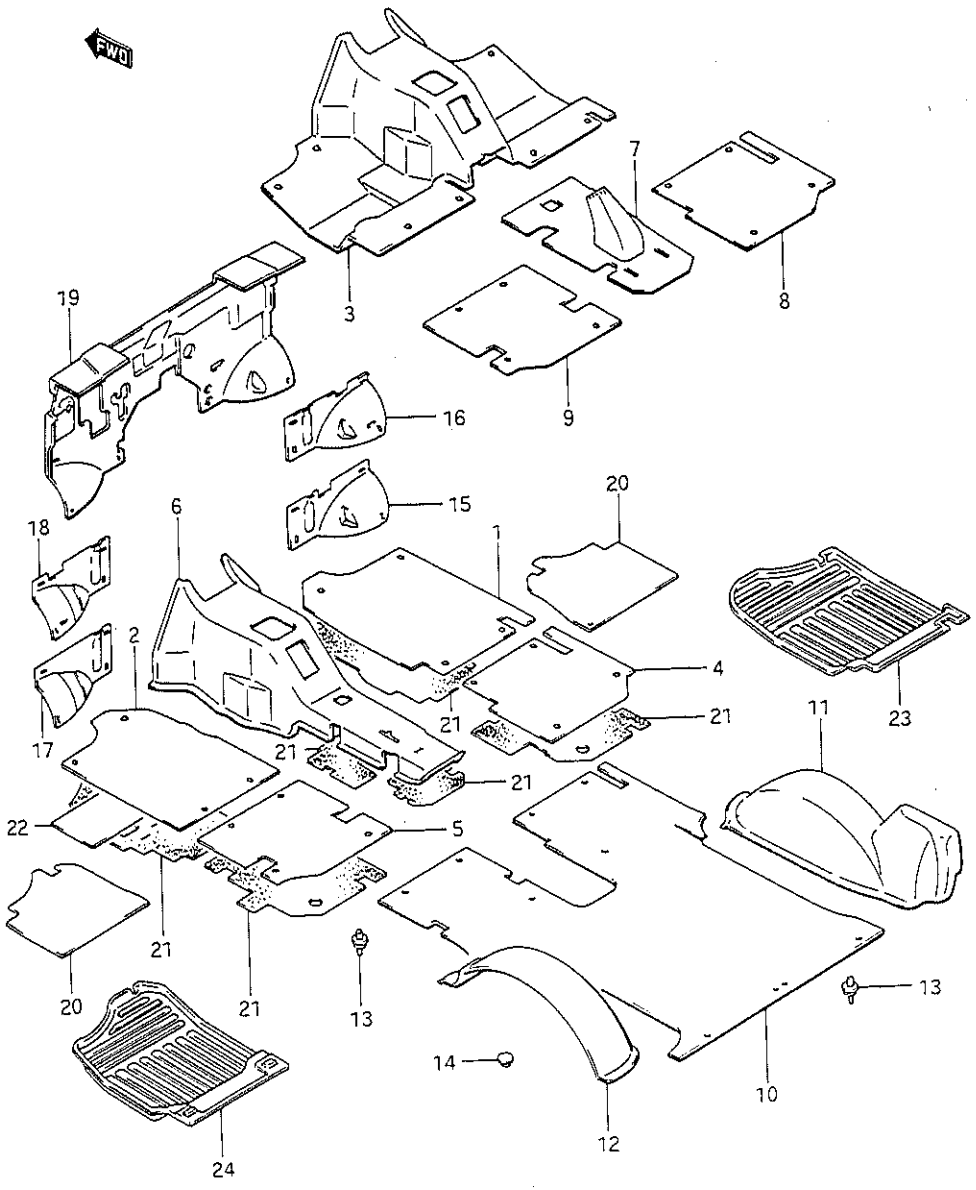

FIG.114(2-E- 3) FLOOR MAT AND CARPET (Q,V:JX)

REF.NO.	PART NO.	DESCRIPTION	Q'TY Q	Q'TY V	REMARKS
7-1	75101-80701-5JR	CARPET, FL tunnel rear	1	-	E27
7-2	75101-83091-5JS	CARPET, FL tunnel rear	-	1	LHD
7-3	75101-83091-5JR	CARPET, FL tunnel rear	-	1	LHD
7-4	75101-83082-5JS	CARPET, FL tunnel rear	-	1	RHD
7-5	75101-83082-5JR	CARPET, FL tunnel rear	-	1	RHD
7-6	75101-83062-5JS	CARPET, FL tunnel rear	-	1	E15
7-7	75101-83062-5JR	CARPET, FL tunnel rear	-	1	E15
8-1	75130-83221-5JS	CARPET, CTR floor RH	-	1	E16,E25
8-2	75130-83221-5JR	CARPET, CTR floor RH	-	1	E16,E25
9-1	75140-83111-5JS	CARPET, CTR floor LH	-	1	E16,E25
9-2	75140-83111-5JR	CARPET, CTR floor LH	-	1	E16,E25
10-1	75170-83661-5GP	MAT, rear floor	1	-	LHD(bench seat)
10-2	75170-83661-5JP	MAT, rear floor	1	-	LHD(bench seat)
10-3	75170-83681-5GP	MAT, rear floor	1	-	LHD(separate seat)
10-4	75170-83681-5JP	MAT, rear floor	1	-	LHD(separate seat)
10-5	75170-83651-5GP	MAT, rear floor	1	-	RHD(bench seat)
10-6	75170-83651-5JP	MAT, rear floor	1	-	RHD(bench seat)
10-7	75170-83671-5GP	MAT, rear floor	1	-	RHD(separate seat)
10-8	75170-83671-5JP	MAT, rear floor	1	-	RHD(separate seat)
10-9	75170-80511-5JR	CARPET, rear floor	1	-	E27(bench seat)
10-10	75170-80531-5JR	CARPET, rear floor	1	-	E27(bench seat)
10-11	75170-83721-5JS	CARPET, rear floor	-	1	LHD(bench seat)
10-12	75170-83721-5JR	CARPET, rear floor	-	1	LHD(bench seat)
10-13	75170-83741-5JS	CARPET, rear floor	-	1	LHD(separate seat)
10-14	75170-83741-5JR	CARPET, rear floor	-	1	LHD(separate seat)
10-15	75170-83711-5JS	CARPET, rear floor	-	1	RHD(bench seat)
10-16	75170-83711-5JR	CARPET, rear floor	-	1	RHD(bench seat)
10-17	75170-83731-5JS	CARPET, rear floor	-	1	RHD(separate seat)
10-18	75170-83731-5JR	CARPET, rear floor	-	1	RHD(separate seat)

SJ413-4 E1

FIG.114

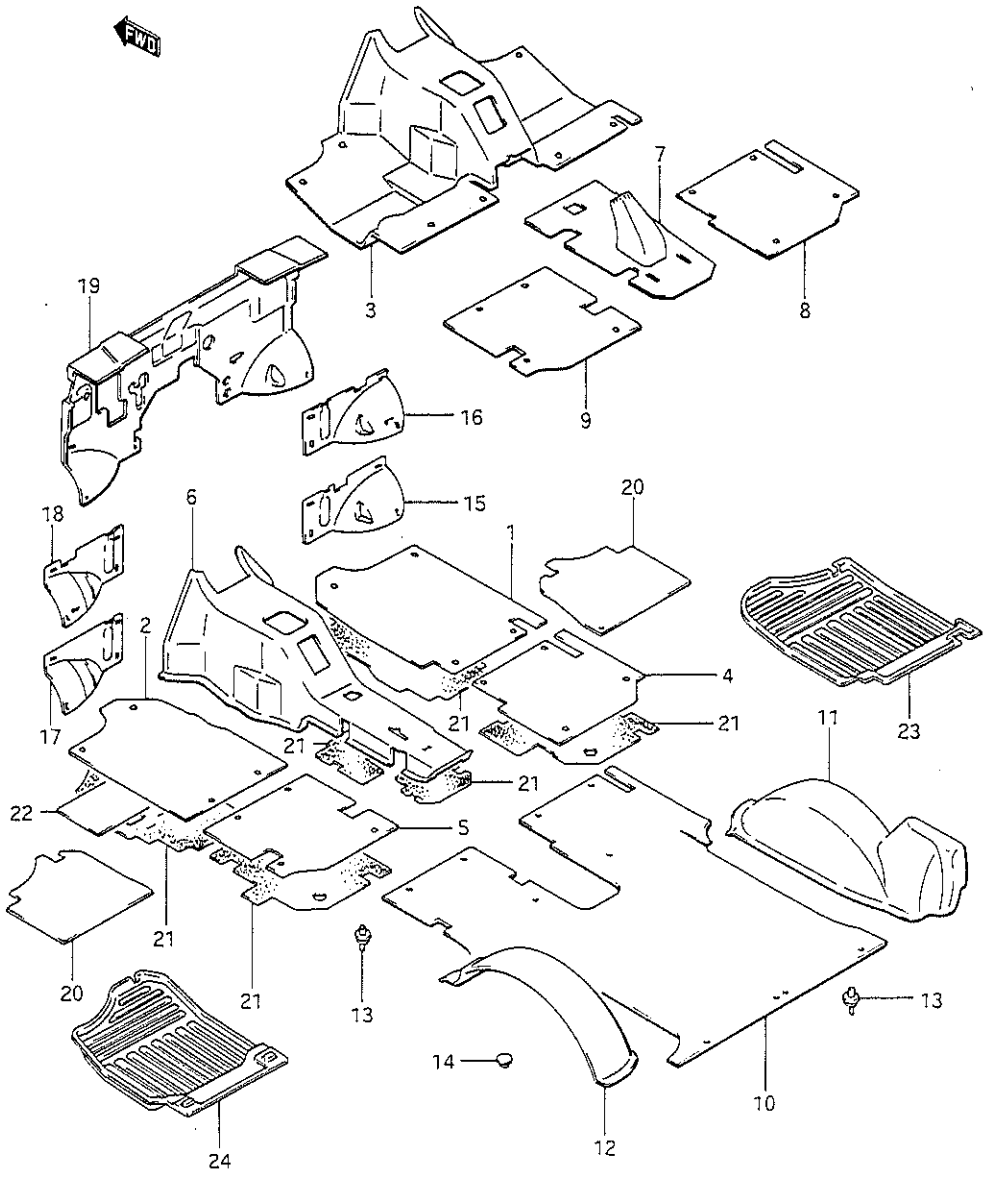

FIG.114(2-E- 4) FLOOR MAT AND CARPET (Q,V:JX)

REF.NO.	PART NO.	DESCRIPTION	Q'TY Q	Q'TY V	REMARKS
11-1	75530-83003-5GP	MAT, rear wheel housing RH	1	-	
11-2	75530-83003-5JP	MAT, rear wheel housing RH	1	-	
11-3	75530-83011-5JR	CARPET, rear wheel housing RH	1	-	E27
11-4	75530-83021-5JS	CARPET, rear wheel housing RH	-	1	
11-5	75530-83021-5JR	CARPET, rear wheel housing RH	-	1	
12-1	75540-83003-5GP	MAT, rear wheel housing LH	1	-	
12-2	75540-83003-5JP	MAT, rear wheel housing LH	1	-	
12-3	75540-83011-5JR	CARPET, rear wheel housing LH	1	-	E27
12-4	75540-83021-5JS	CARPET, rear wheel housing LH	-	1	
12-5	75540-83021-5JR	CARPET, rear wheel housing LH	-	1	
13	09410-00067	HOOK MALE	20	20	
14	09250-06004	CAP, floor mat hook	7	7	
15	75211-83010-281	SILENCER, dash panel RH	1	-	LHD
16	75211-83000-281	SILENCER, dash panel RH	1	-	RHD
17	75221-83010-281	SILENCER, dash panel LH	1	-	LHD
18	75221-83000-281	SILENCER, dash panel LH	1	-	RHD
19-1	75240-83011	SILENCER, dash panel	-	1	LHD
19-2	75240-83001	SILENCER, dash panel	-	1	RHD
20-1	75250-83001	SILENCER, front floor RH	-	1	
20-2	75260-83001	SILENCER, front floor LH	-	1	
21	99000-73371	SILENCER, floor (570x900)	AR	AR	
22	75231-80000	PAD, front floor LH	1	1	LHD
23-1	75511-83022-488	TRAY, front floor RH	1	-	E6
23-2	75511-83031-488	TRAY, front floor RH	1	1	E18,E22,E39
24-1	75521-83051-488	TRAY, front floor LH	1	-	E6
24-2	75521-83002-488	TRAY, front floor LH	1	1	E18,E22,E39

SJ413-4 E1

FIG.115

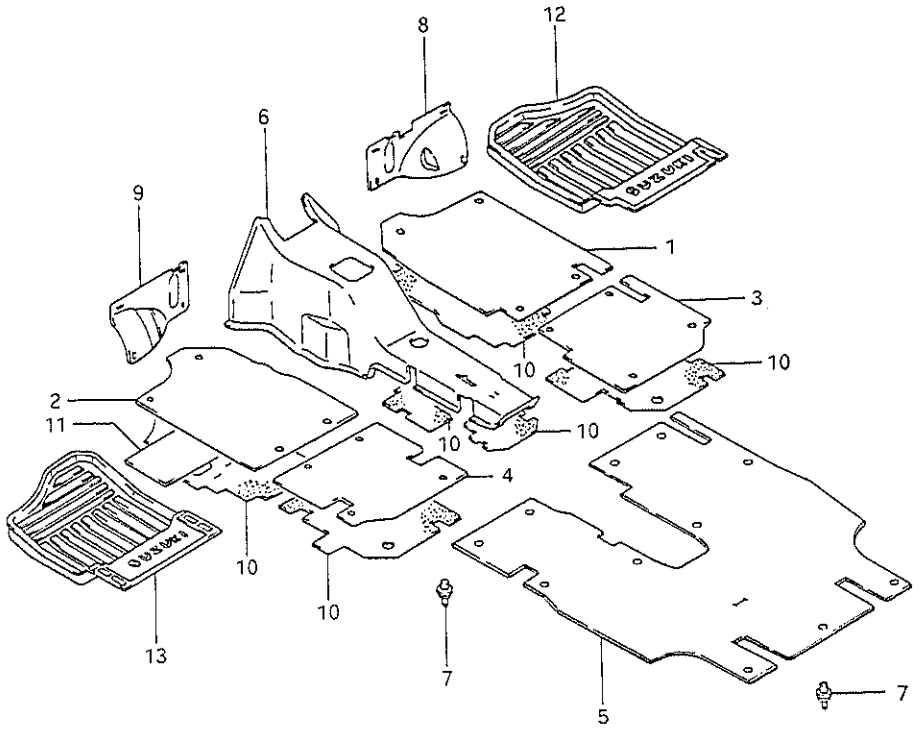

FIG.115(2-E- 5) FLOOR MAT AND CARPET (W:JA)

REF.NO.	PART NO.	DESCRIPTION	Q'TY W		REMARKS
1-1	75110-83040-5GP	MAT, front floor RH	1	1	LHD
1-2	75110-83040-5JP	MAT, front floor RH	1	1	LHD
1-3	75110-83000-5GP	MAT, front floor RH	1	1	RHD
1-4	75110-83000-5JP	MAT, front floor RH	1	1	RHD
2-1	75120-83010-5GP	MAT, front floor LH	1	1	LHD
2-2	75120-83010-5JP	MAT, front floor LH	1	1	LHD
2-3	75120-83040-5GP	MAT, front floor LH	1	1	RHD
2-4	75120-83040-5JP	MAT, front floor LH	1	1	RHD
3-1	75130-83190-5GP	MAT, center floor RH	1	1	LHD(F)
3-2	75130-83190-5JP	MAT, center floor RH	1	1	LHD(F)
3-3	75130-83010-5GP	MAT, center floor RH	1	1	RHD(F)
3-4	75130-83010-5JP	MAT, center floor RH	1	1	RHD(F)
4-1	75140-83020-5GP	MAT, center floor LH	1	1	LHD(F)
4-2	75140-83020-5JP	MAT, center floor LH	1	1	LHD(F)
4-3	75140-83160-5GP	MAT, center floor LH	1	1	RHD(F)
4-4	75140-83160-5JP	MAT, center floor LH	1	1	RHD(F)
5-1	75170-80470-5GP	MAT, rear floor	1	1	LHD(C)
5-2	75170-80470-5JP	MAT, rear floor	1	1	LHD(C)
5-3	75170-80460-5GP	MAT, rear floor	1	1	RHD(C)
5-4	75170-80460-5JP	MAT, rear floor	1	1	RHD(C)
6-1	75150-83020-5GP	MAT, floor tunnel	1	1	LHD
6-2	75150-83020-5JP	MAT, floor tunnel	1	1	LHD
6-3	75150-83010-5GP	MAT, floor tunnel	1	1	RHD
6-4	75150-83010-5JP	MAT, floor tunnel	1	1	RHD
6-5	75150-83150-5GP	MAT, floor tunnel	1	1	E14
6-6	75150-83150-5JP	MAT, floor tunnel	1	1	E14
7-1	09410-00067	HOOK MALE	23	1	C
7-2	09410-00067	HOOK MALE	16	1	F

COLOR 5GP : Brown
5JP : Black

SJ413-4 E1

FIG.115

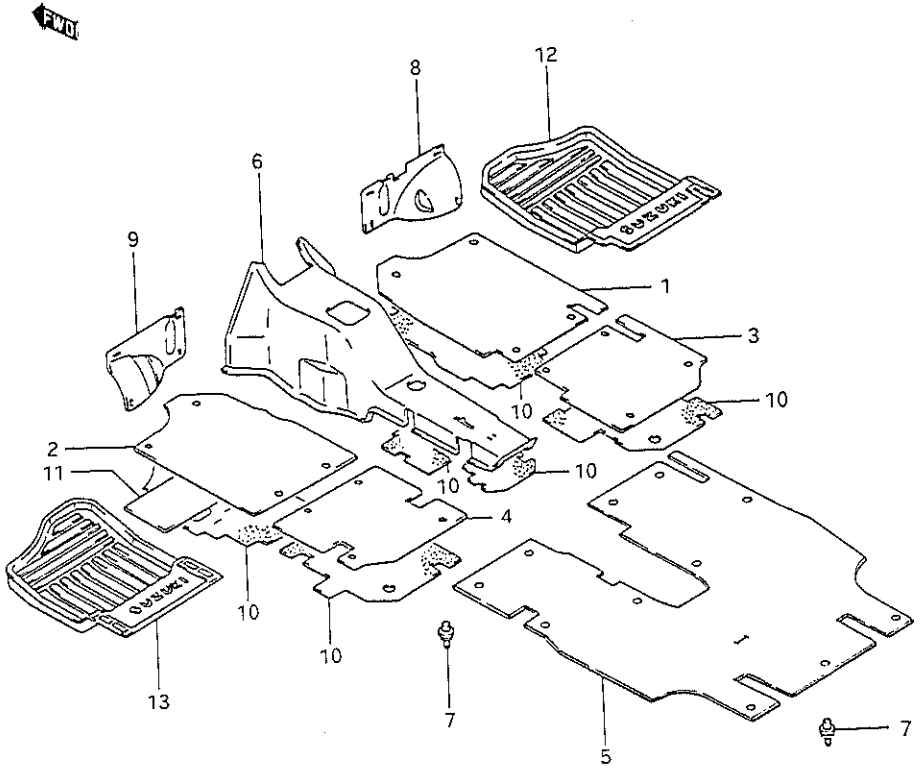

FIG.115(2-E- 6) FLOOR MAT AND CARPET (W:JA)

REF.NO.	PART NO.	DESCRIPTION	Q'TY W		REMARKS
8-1	75211-83010-281	SILENCER, dash panel RH	1	1	LHD
8-2	75211-83000-281	SILENCER, dash panel RH	1	1	RHD
9-1	75221-83010-281	SILENCER, dash panel LH	1	1	LHD
9-2	75221-83000-281	SILENCER, dash panel LH	1	1	RHD
10	99000-73371	SILENCER, floor (570x900)	AR	1	
11	75231-80000	PAD, front floor LH	1	1	LHD
12	75511-83031-48B	TRAY, front floor RH	1	1	E18,E22,E39
13	75521-83002-48B	TRAY, front floor LH	1	1	E18,E22,E39

SJ413-4 E1

FIG.116

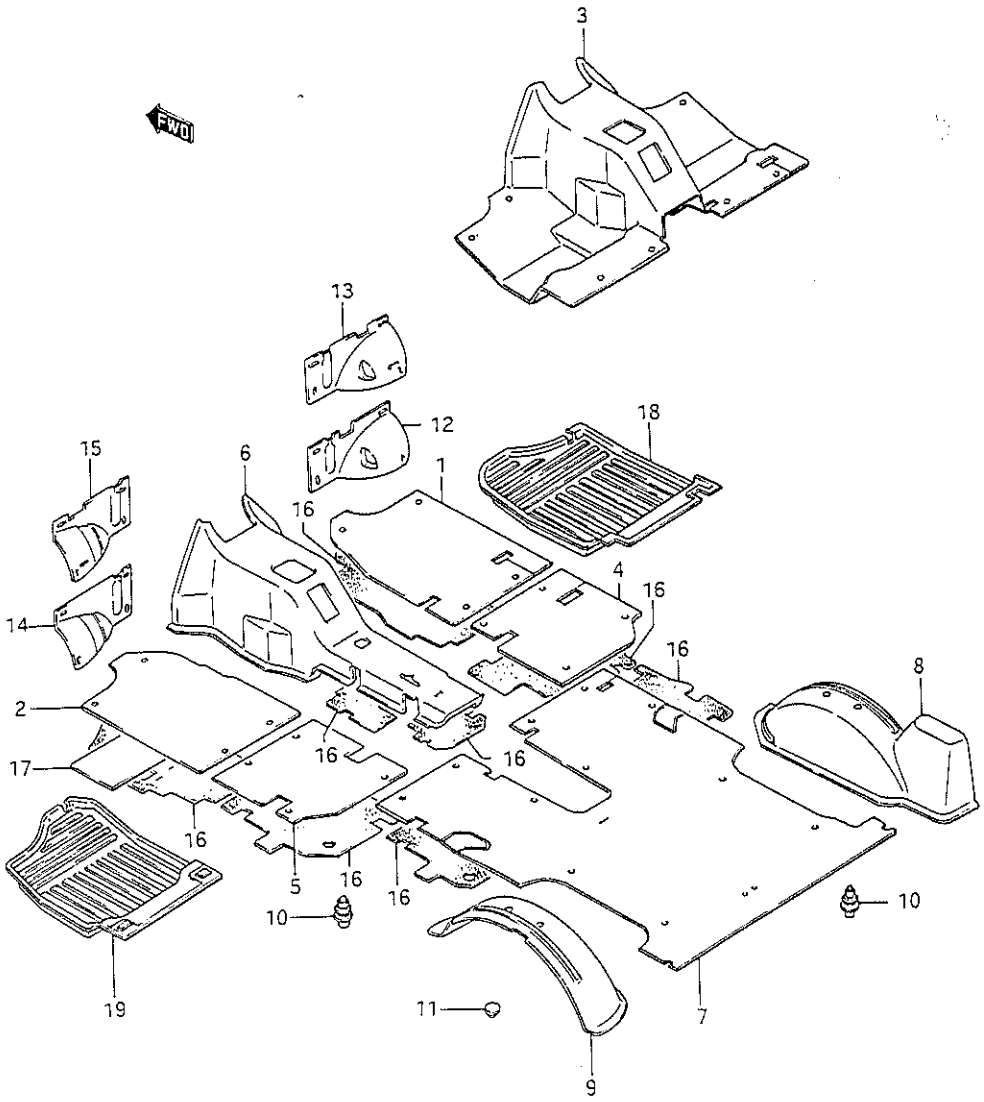

FIG.116(2-E- 7) FLOOR MAT AND CARPET (W:JX)

REF.NO.	PART NO.	DESCRIPTION	Q'TY W	REMARKS
1-1	75110-83051-5GP	MAT, front floor RH	1	LHD
1-2	75110-83051-5JP	MAT, front floor RH	1	LHD
1-3	75110-83021-5GP	MAT, front floor RH	1	RHD
1-4	75110-83021-5JP	MAT, front floor RH	1	RHD
2-1	75120-83031-5GP	MAT, front floor LH	1	LHD
2-2	75120-83031-5JP	MAT, front floor LH	1	LHD
2-3	75120-83051-5GP	MAT, front floor LH	1	RHD
2-4	75120-83051-5JP	MAT, front floor LH	1	RHD
3-1	75150-83281-5JS	CARPET, floor tunnel front	1	LHD(W/resin top)
3-2	75150-83281-5JR	CARPET, floor tunnel front	1	LHD(W/resin top)
3-3	75150-83261-5JS	CARPET, floor tunnel front	1	RHD(W/resin top)
3-4	75150-83261-5JR	CARPET, floor tunnel front	1	RHD(W/resin top)
4-1	75130-83181-5GP	MAT, center floor RH	1	E16(2 persons)
4-2	75130-83181-5JP	MAT, center floor RH	1	E16(2 persons)
5-1	75140-83061-5GP	MAT, center floor LH	1	E16(2 persons)
5-2	75140-83061-5JP	MAT, center floor LH	1	E16(2 persons)
6-1	75150-83040-5GP	MAT, floor tunnel	1	LHD
6-2	75150-83040-5JP	MAT, floor tunnel	1	LHD
6-3	75150-83030-5GP	MAT, floor tunnel	1	RHD
6-4	75150-83030-5JP	MAT, floor tunnel	1	RHD
6-5	75150-83080-5GP	MAT, floor tunnel	1	E15
6-6	75150-83080-5JP	MAT, floor tunnel	1	E15
6-7	75101-83051-5JS	CARPET, floor tunnel rear	1	LHD(W/resin top)
6-8	75101-83051-5JR	CARPET, floor tunnel rear	1	LHD(W/resin top)
6-9	75101-83101-5JS	CARPET, floor tunnel rear	1	E15(W/resin top)
6-10	75101-83101-5JR	CARPET, floor tunnel rear	1	E15(W/resin top)
6-11	75101-80701-5JS	CARPET, floor tunnel rear	1	RHD(W/resin top)
6-12	75101-80701-5JR	CARPET, floor tunnel rear	1	RHD(W/resin top)

COLOR
5GP : Brown
5JP : Black
5JS : Brown
5JR : Black

SJ413-4 E1

FIG.116

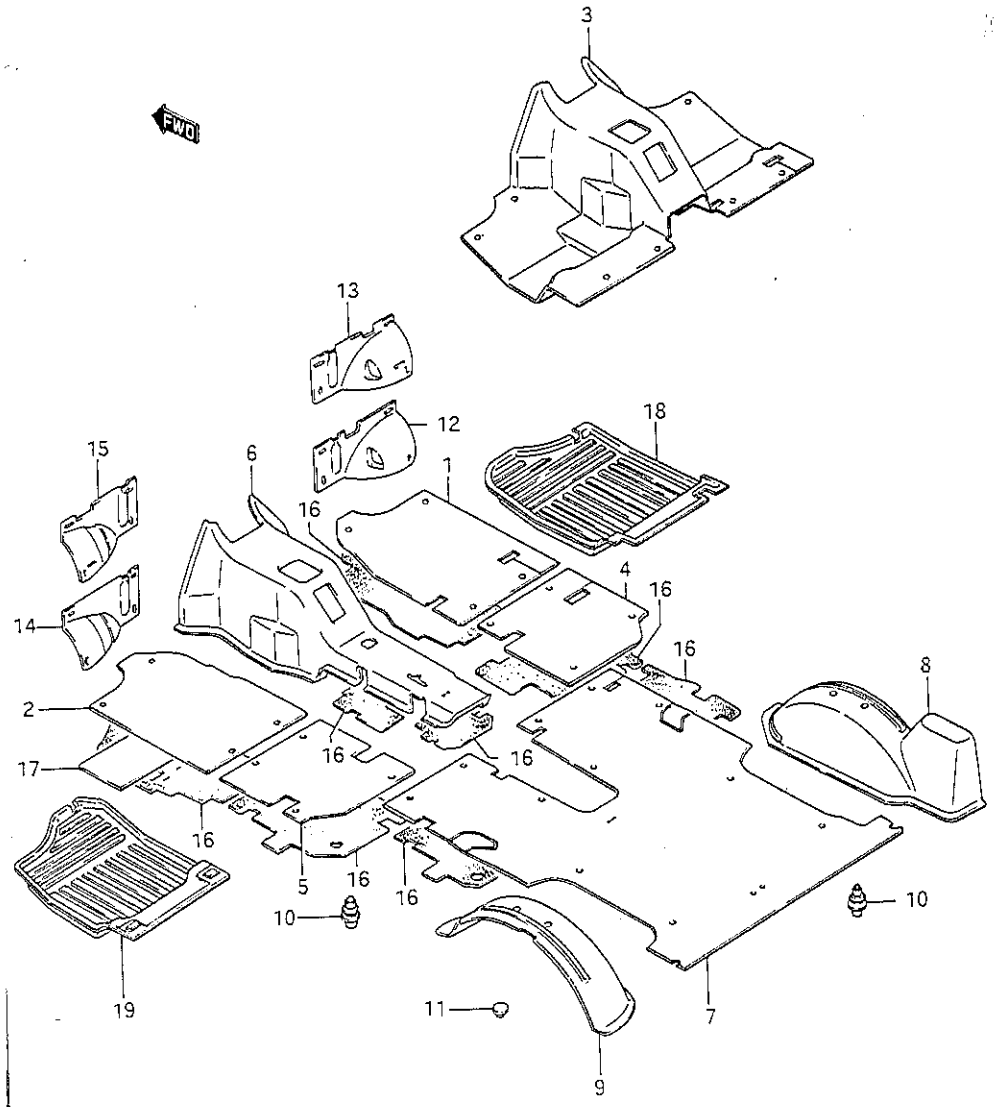

FIG.116(2-E- 8) FLOOR MAT AND CARPET (W:JX)

REF.NO.	PART NO.	DESCRIPTION	Q'TY W	REMARKS
7-1	75170-83771-5GP	MAT, rear floor	1	LHD
7-2	75170-83771-5JP	MAT, rear floor	1	LHD
7-3	75170-83781-5GP	MAT, rear floor	1	RHD
7-4	75170-83781-5JP	MAT, rear floor	1	RHD
7-5	75170-80241-5JS	CARPET, rear floor	1	LHD(W/resin top,4 persons)
7-6	75170-80241-5JR	CARPET, rear floor	1	LHD(W/resin top,4 persons)
7-7	75170-80271-5JS	CARPET, rear floor	1	LHD(W/resin top,6 persons)
7-8	75170-80271-5JR	CARPET, rear floor	1	LHD(W/resin top,6 persons)
7-9	75170-80231-5JS	CARPET, rear floor	1	RHD(W/resin top,4 persons)
7-10	75170-80231-5JR	CARPET, rear floor	1	RHD(W/resin top,4 persons)
7-11	75170-80261-5JS	CARPET, rear floor	1	RHD(W/resin top,6 persons)
7-12	75170-80261-5JR	CARPET, rear floor	1	RHD(W/resin top,6 persons)
7-13	75170-80201-5JS	CARPET, rear floor	1	W/resin top
7-14	75170-80201-5JR	CARPET, rear floor	1	W/resin top
8-1	75530-83031-5GP	MAT, rear wheel housing RH	1	
8-2	75530-83031-5JP	MAT, rear wheel housing RH	1	
8-3	75530-83041-5JS	CARPET, rear wheel house RH	1	W/resin top
8-4	75530-83041-5JR	CARPET, rear wheel house RH	1	W/resin top
9-1	75540-83031-5GP	MAT, rear wheel housing LH	1	
9-2	75540-83031-5JP	MAT, rear wheel housing LH	1	
9-3	75540-83041-5JS	CARPET, rear wheel house LH	1	W/resin top
9-4	75540-83041-5JR	CARPET, rear wheel house LH	1	W/resin top
10	09410-00067	HOOK MALE	20	
11	09250-06004	CAP, floor mat hook	7	

COLOR
5GP : Brown
5JP : Black
5JS : Brown
5JR : Black

SJ413-4 E1

FIG.116

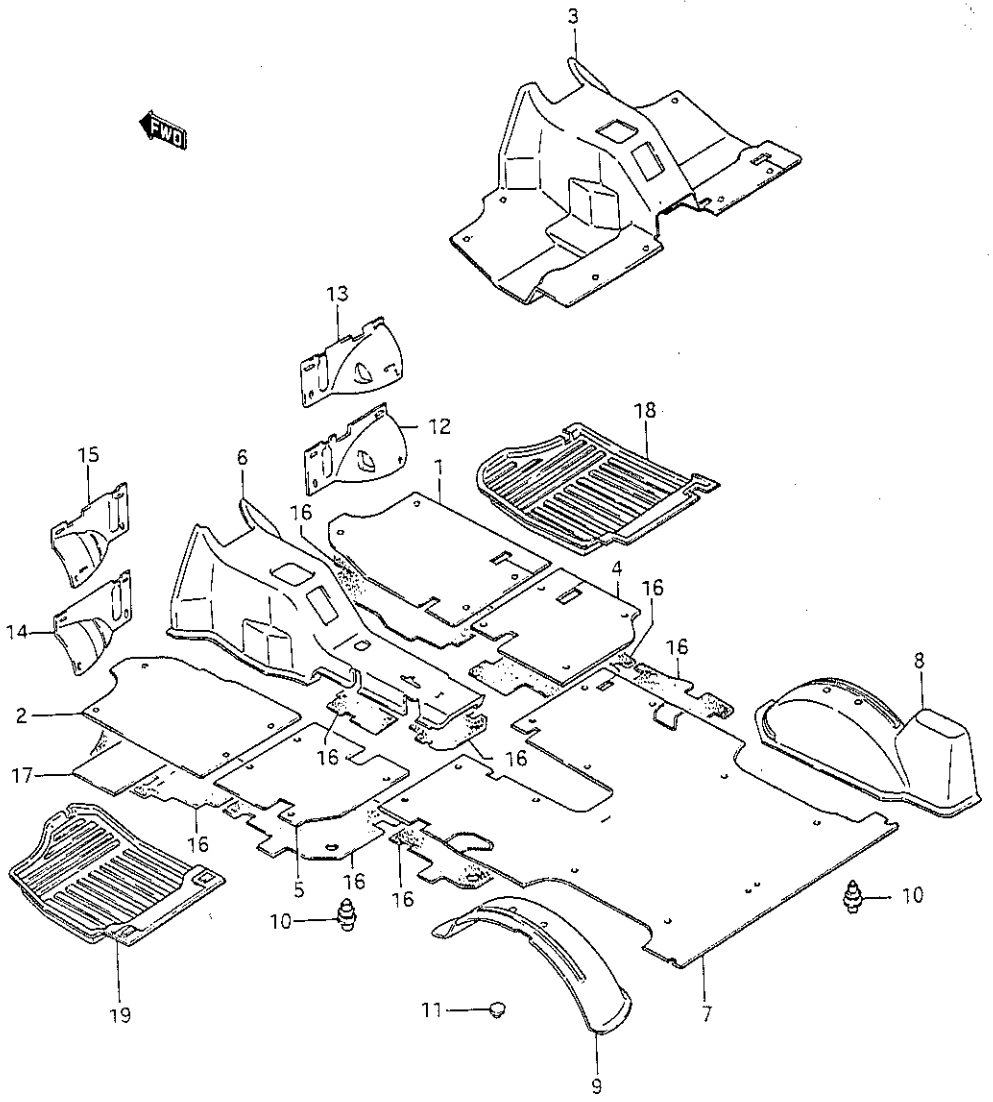

FIG.116(2-E- 9) FLOOR MAT AND CARPET (W:JX)

REF.NO.	PART NO.	DESCRIPTION	Q'TY W	REMARKS
12	75211-83010-281	SILENCER, dash panel RH	1	LHD
13	75211-83000-281	SILENCER, dash panel RH	1	RHD
14	75221-83010-281	SILENCER, dash panel LH	1	LHD
15	75221-83000-281	SILENCER, dash panel LH	1	RHD
16	99000-73371	SILENCER, floor (570x900)	AR	
17	75231-80000	PAD, front floor LH	1	LHD
18-1	75511-83031-48B	TRAY, front floor RH	1	E18,E22
18-2	75511-83022-48B	TRAY, front floor RH	1	E6
19-1	75521-83002-48B	TRAY, front floor LH	1	E18,E22
19-2	75521-83051-48B	TRAY, front floor LH	1	E6

SJ413-4 E1

FIG.117

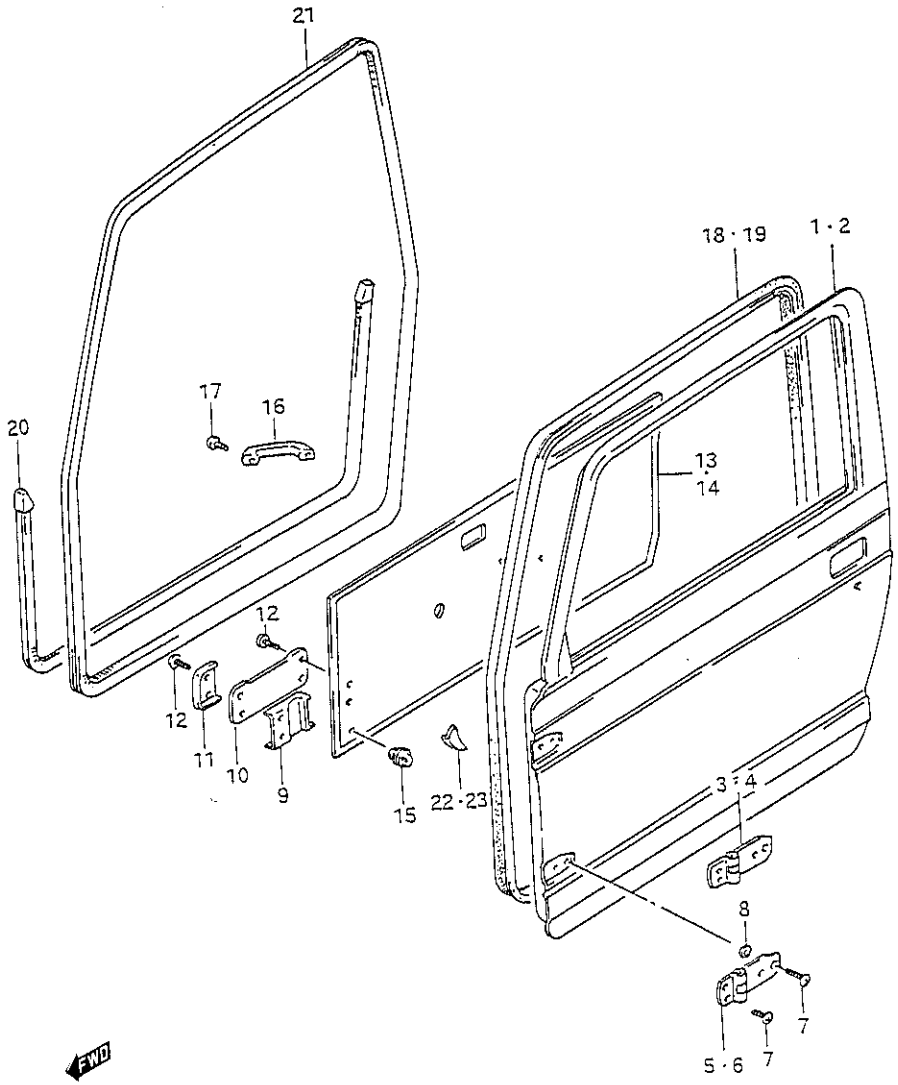

FIG.117(2-E-10) FRONT DOOR

REF.NO.	PART NO.	DESCRIPTION	Q'TY Q/W	Q'TY V	REMARKS
1-1	68001-80133	PANEL, front door RH	1	1	
1-2	68001-80123	PANEL, front door RH	1	1	E2,E6,E15,E16,E17,E18, E19,E22,E27,E25,E34, E39,E54,E68,E98
2-1	68002-80133	PANEL, front door LH	1	1	
2-2	68002-80123	PANEL, front door LH	1	1	E2,E6,E15,E16,E17,E18, E19,E22,E25,E27,E34, E39,E54,E68,E98
3	69310-80110	HINGE, door upper RH	1	1	
4	69340-80110	HINGE, door upper LH	1	1	
5	69320-80110	HINGE, door lower RH	1	1	
6	69350-80110	HINGE, door lower LH	1	1	
7	09125-08002	SCREW	16	16	
8	09160-08086	WASHER	8	8	
9	76182-63101	PROTECTOR, trim	2	2	
10	81811-80100	BAND, open stopper	2	2	
11	76182-58002	GARNISH, open stopper	4	4	
12	02132-05205	SCREW	8	8	
13-1	83710-80131-5GR	TRIM, door RH (Brown)	1	1	JA
13-2	83710-80131-5GT	TRIM, door RH (Black)	1	1	JA
13-3	83710-70A00-2AK	TRIM, door RH (Brown)	1	1	JX
13-4	83710-70A00-2AJ	TRIM, door RH (Black)	1	1	JX
13-5	83710-70A00-2AU	TRIM, door RH (Brown)	1	1	JX:W(resin top)
13-6	83710-70A00-2AS	TRIM, door RH (Black)	1	1	JX:W(resin top)
14-1	83720-80131-5GR	TRIM, door LH (Brown)	1	1	JA
14-2	83720-80131-5GT	TRIM, door LH (Black)	1	1	JA
14-3	83720-70A00-2AK	TRIM, door LH (Brown)	1	1	JX
14-4	83720-70A00-2AJ	TRIM, door LH (Black)	1	1	JX
14-5	83720-70A00-2AU	TRIM, door LH (Brown)	1	1	JX:W(resin top)
14-6	83720-70A00-2AS	TRIM, door LH (Black)	1	1	JX:W(resin top)
15	09409-08309	CLIP, door trim	22	22	

SJ413-4 E1

FIG.117

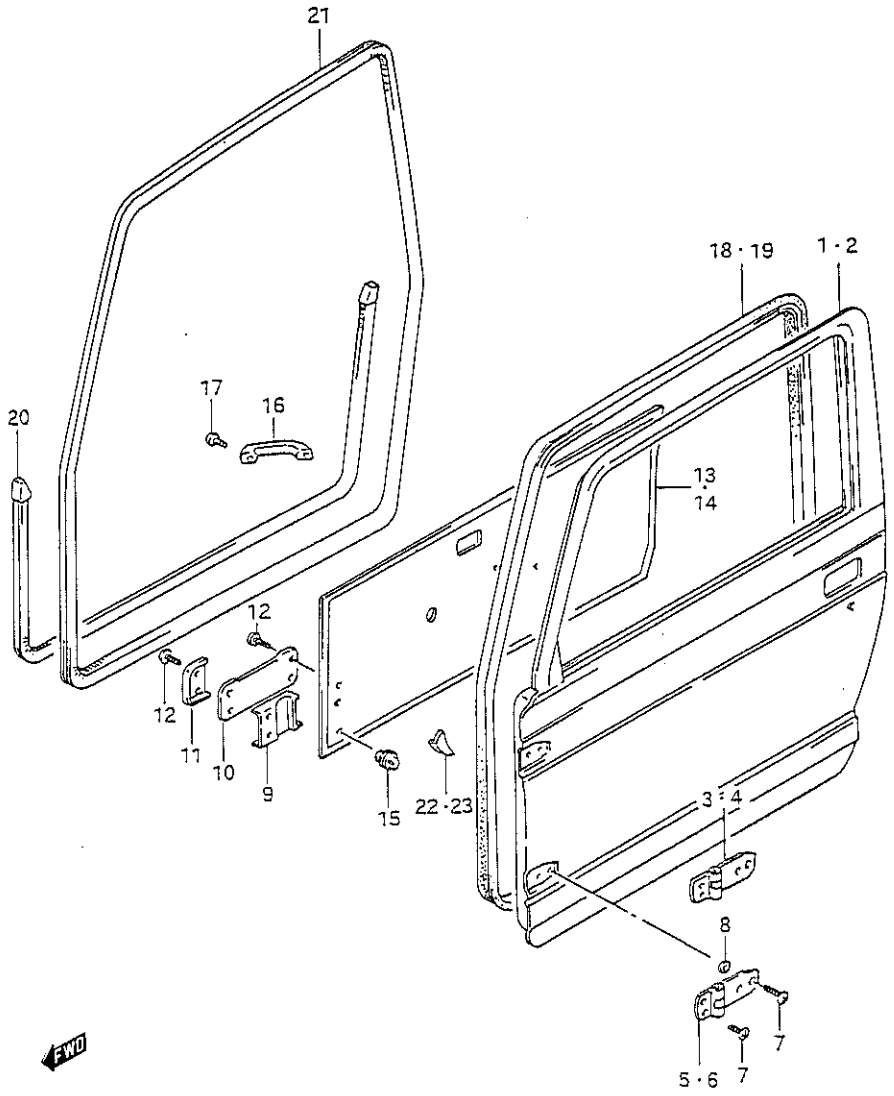

FIG.117(2-E-11) FRONT DOOR

REF.NO.	PART NO.	DESCRIPTION	Q'TY Q/W	Q'TY V	REMARKS
16-1	78271-58053-281	HANDLE, inside pull (Black)	2	2	
16-2	78271-58053-5CW	HANDLE, Inside pull (Brown)	2	2	
17	09125-06041	SCREW	4	4	
18	84641-80121	WEATHERSTRIP, door RH	1	1	
19	84651-80121	WEATHERSTRIP, door LH	1	1	
20	84630-80000	OPENING TRIM, door	2	-	
21	84645-80101	OPENING TRIM, door	-	2	
22	84642-80120	PAD, RH	1	-	
23	84652-80120	PAD, LH	1	-	

SJ413-4 E1

FIG. 118

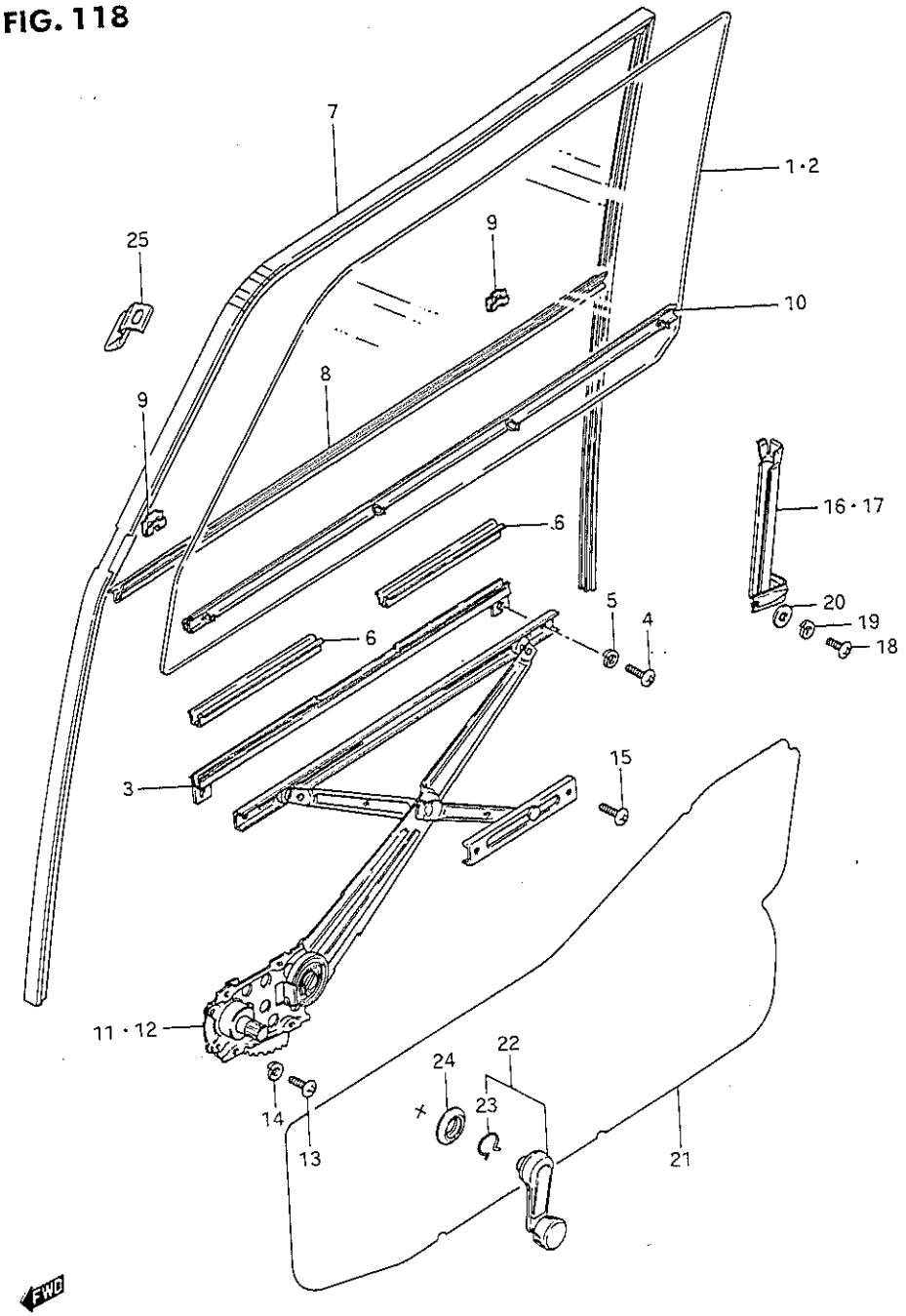

FIG.118(2-E-12) FRONT DOOR GLASS

REF.NO.	PART NO.	DESCRIPTION	Q'TY Q/W	Q'TY V	REMARKS
1-1	84531-80112	GLASS, front door RH (Clear)	1	1	
1-2	84531-80102	GLASS, front door RH (Tinted)	1	1	
2-1	84536-80112	GLASS, front door LH (Clear)	1	1	
2-2	84536-80102	GLASS, front door LH (Tinted)	1	1	
3	78710-78000	CHANNEL, glass bottom	2	2	
4	02112-06086	SCREW	4	4	
5	08321-21066	LOCK WASHER	4	4	
6	78811-78400	RUBBER, channel	4	4	
7	83661-83000	CHANNEL, glass run	2	2	
8	83811-80100	SCRAPE, outside	2	2	
9	78991-78000	CLIP, scrape	12	12	
10	83850-80100	SCRAPE, inside	2	2	
11	78501-78001	REGULATOR ASSY, RH	1	1	
12	78502-78001	REGULATOR ASSY, LH	1	1	
13	02112-06086	SCREW	8	8	
14	08321-21066	LOCK WASHER	8	8	
15	02142-06108	SCREW	4	4	
16	81730-80101	SASH, door rear RH	1	1	
17	81740-80101	SASH, door rear LH	1	1	
18	02112-06128	SCREW	2	2	
19	08321-21067	LOCK WASHER	2	2	
20	08322-21067	WASHER	2	2	
21	83911-80120	FILM, water proof	2	2	
22-1	78460-78002-281	HANDLE, regulator (Black)	2	2	
22-2	78460-78002-5CW	HANDLE, regulator (Brown)	2	2	
22-3	82960-82100-281	HANDLE, regulator (Black)	2	2	E2,E6,E15,E16,E17,E18, E19,E22,E25,E34,E39, E54,E68
22-4	82960-82100-5CW	HANDLE, regulator (Brown)	2	2	E2,E6,E15,E16,E17,E18, E19,E22,E25,E34,E39, E54,E68
23	78463-78000	.SNAP	2	2	
24-1	78472-78000-281	ESCUTCHEON, handle (Black)	2	2	
24-2	78472-78000-5CW	ESCUTCHEON, handle (Brown)	2	2	
25	78861-78400	GUIDE, glass	2	2	E2,E6,E15,E16,E17,E18, E19,E22,E25,E34,E39, E54,E68

SJ413-4 E1

FIG.119

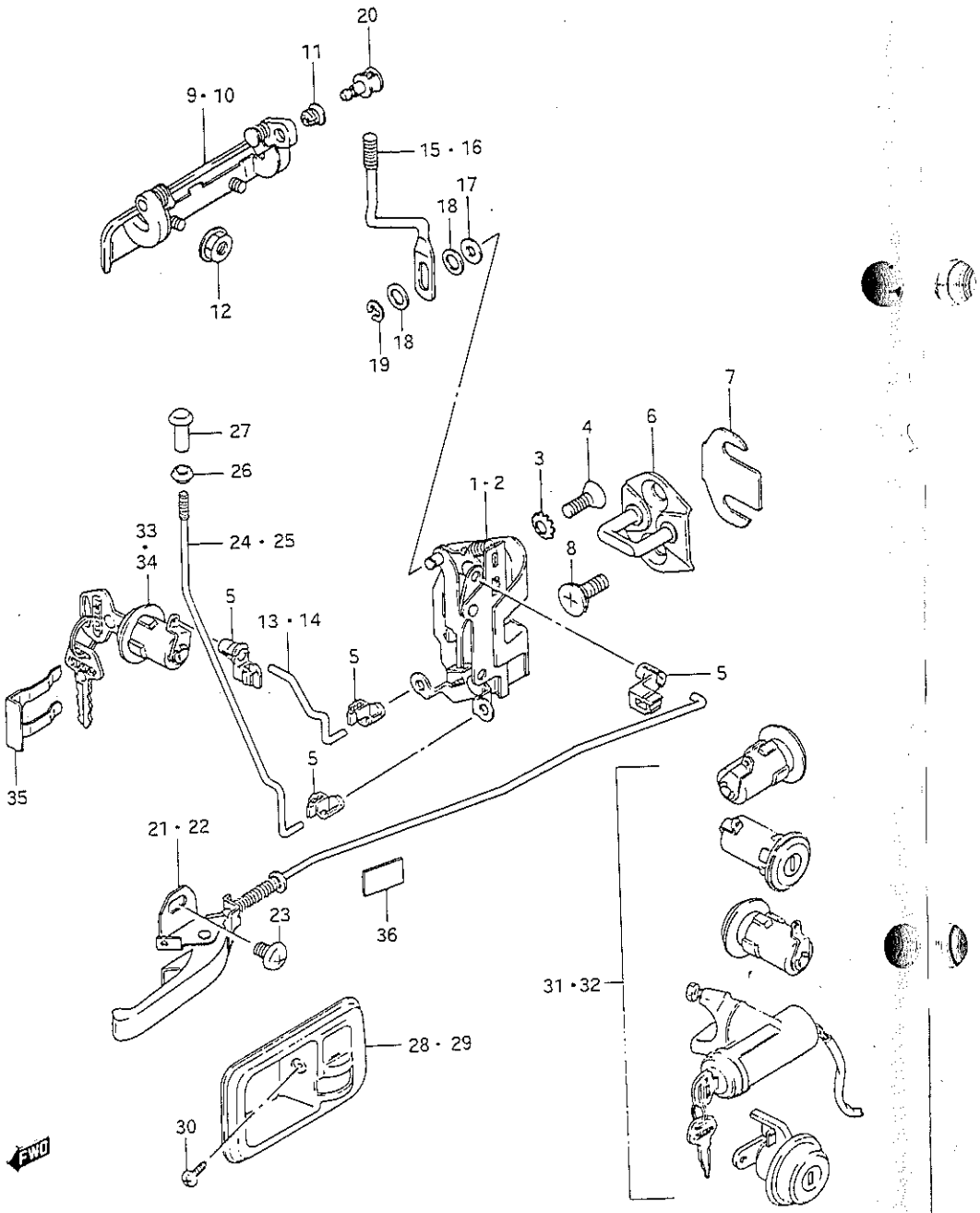

SJ413-4 E1

FIG.119(2-E-13) FRONT DOOR LOCK

REF.NO.	PART NO.	DESCRIPTION	Q'TY Q/W	Q'TY V	REMARKS
1	82201-70A00	LOCK ASSY, door RH	1	1	
2	82202-70A00	LOCK ASSY, door LH	1	1	
3	08323-31068	WASHER	6	6	
4	02122-06166	SCREW	6	6	
5	09209-05016	PIN	8	8	
6	82610-85000	STRIKER, lock	2	2	
7	82681-80100	SPACER	AR	0~2	
8	09137-08004	SCREW	4	4	
9	82810-83000	HANDLE, door RH	1	1	
10	82820-83000	HANDLE, door LH	1	1	
11	82891-80100	SNAP	2	2	
12	08316-26066	NUT	4	4	
13	82291-80100	ROD, control RH	1	1	
14	82292-80100	ROD, control LH	1	1	
15	83211-80100	ROD, handle RH	1	1	
16	83212-80100	ROD, handle LH	1	1	
17	09161-04008	WASHER (4x12x2)	2	2	
18	09161-06008	WASHER (6.5x13x1)	4	4	
19	08332-11058	E RING	2	2	
20	77716-79000	JOINT, handle rod	2	2	
21-1	83110-80100-281	HANDLE, inside RH (Black)	1	1	
21-2	83110-80100-5CW	HANDLE, inside RH (Brown)	1	1	
22-1	83130-80100-281	HANDLE, inside LH (Black)	1	1	
22-2	83130-80100-5CW	HANDLE, inside LH (Brown)	1	1	
23	02142-06108	SCREW	4	4	
24	83241-80100	ROD, safety lock RH	1	1	
25	83242-80100	ROD, safety lock LH	1	1	
26	78242-61000	CAP, lock knob	2	2	
27	78241-60002	KNOB, inside lock	2	2	

SJ413-4 E1

FIG.119

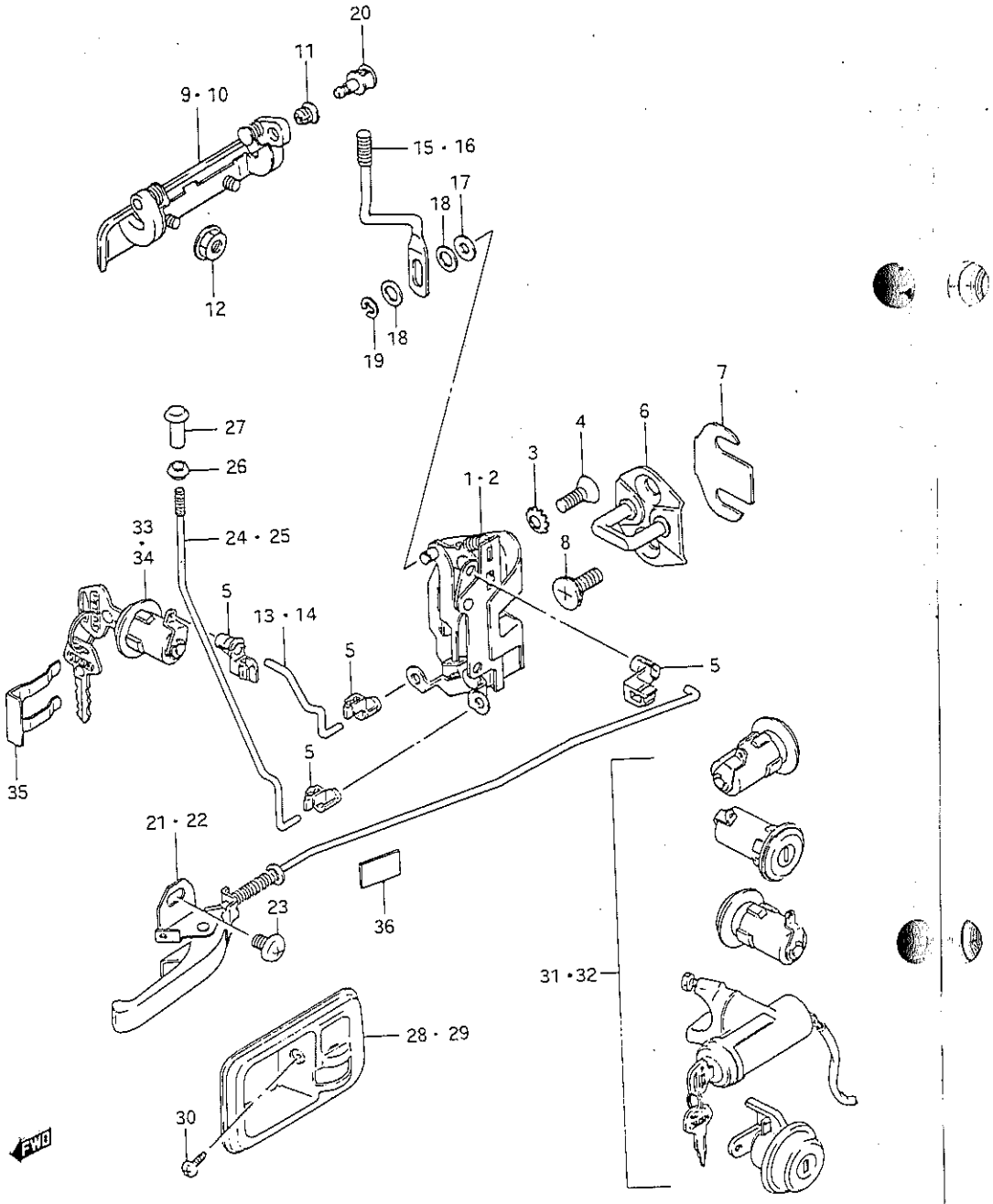

FIG.119(2-E-14) FRONT DOOR LOCK

REF.NO.	PART NO.	DESCRIPTION	Q'TY Q/W	Q'TY V	REMARKS
28-1	78471-79000-281	CASE, handle RH (Black)	1	1	
28-2	78471-79000-5CW	CASE, handle RH (Brown)	1	1	
29-1	78481-79000-281	CASE, handle LH (Black)	1	1	
29-2	78481-79000-5CW	CASE, handle LH (Brown)	1	1	
30	03141-04085	SCREW	2	2	
31	77401-80851	LOCK SET	1	-	
32	77401-80812	LOCK SET	-	1	
33	77400-70812	.CYLINDER ASSY, door RH	1	1	
34	77400-70832	.CYLINDER ASSY, door LH	1	1	
35	77461-78000	CLIP, key cylinder	2	2	
36	77591-75000	PAD, door inside handle	2	2	

SJ413-4 E1

FIG. 120

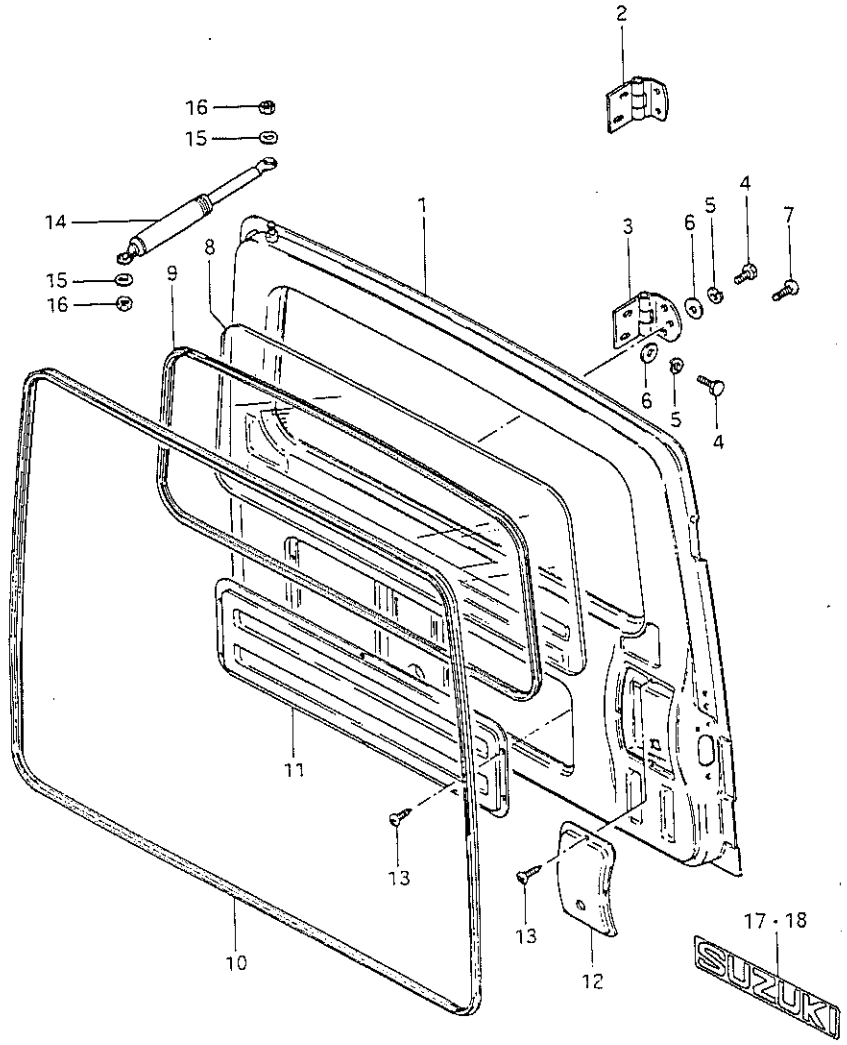

FWD

SJ413-4 E1

FIG.120(2-E-15) BACK DOOR (V)

REF.NO.	PART NO.	DESCRIPTION	Q'TY V	REMARKS
1-1	69100-83501	PANEL ASSY, back door	1	
1-2	69100-83511	PANEL ASSY, back door	1	E2,E15,E16,E17,E18,E19, E22,E25,E27,E34,E39,E54, E68,E98
2	69510-80111	HINGE, door upper	1	
3	69520-80111	HINGE, door lower	1	
4	09100-08167	BOLT (8x22)	9	
5	08321-21086	LOCK WASHER	9	
6	08322-11086	WASHER	9	
7	09125-08002	SCREW	5	E2,E15,E16,E17,E18,E19, E22,E25,E34,E39,E46,E54, E68,E98
8-1	84571-80132	GLASS, back window (Clear)	1	
8-2	84571-80112	GLASS, back window (Tinted)	1	
8-3	84571-80122	GLASS, back window (Clear)	1	W/defogger
8-4	84571-80102	GLASS, back window (Tinted)	1	W/defogger
9	84623-80100	WEATHERSTRIP, window	1	
10	84681-80100	WEATHERSTRIP, door	1	
11	83771-80100	LID, service hole	1	
12	83772-80100	LID, lock service hole	1	
13	03141-05128	SCREW	12	
14	81860-80101	UNIT, door balancer	2	
15	08322-21063	WASHER	2	
16	08310-11063	NUT	2	
17	77813-80010-019	EMBLEM, tail (Black)	1	BODY:38C,18J
18	77813-80010-37E	EMBLEM, tail (Gray)	1	BODY:26U,21L,07B,20V, 27G,24U,37T,19H

FIG.121

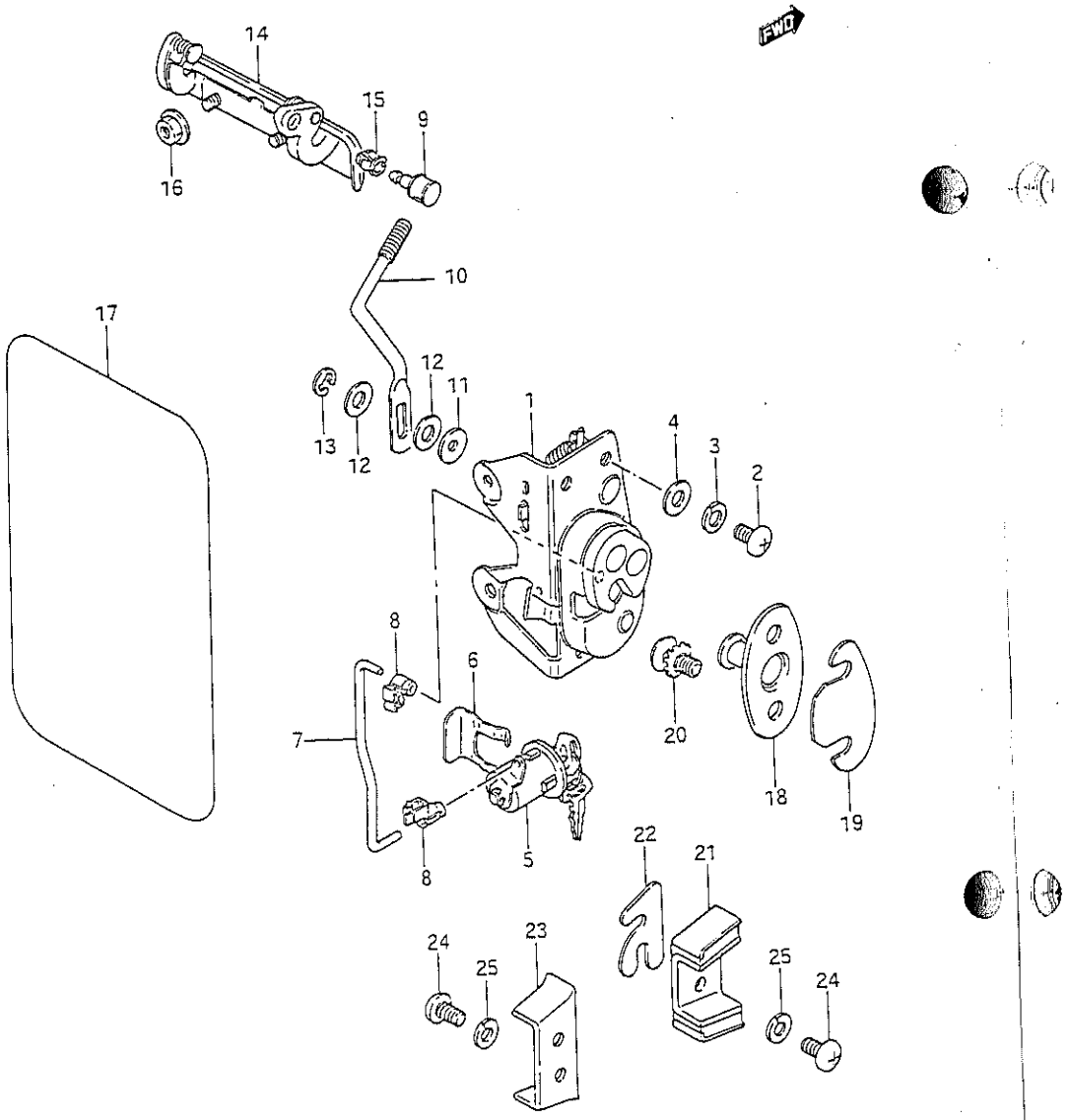

FIG.121(2-E-16) BACK DOOR LOCK (V)

REF.NO.	PART NO.	DESCRIPTION	Q'TY V	REMARKS
1-1	82530-80101	LOCK ASSY, back door	1	
1-2	82530-80111	LOCK ASSY, back door	1	E18,E22,E39
2	02112-06123	SCREW	3	
3	08321-21063	LOCK WASHER	3	
4	08322-21063	WASHER	3	
5	77400-70812	CYLINDER ASSY, back door lock	1	
6	77461-78000	CLIP, key cylinder	1	
7	82581-80100	ROD, control	1	
8	09209-05016	PIN, lock rod	2	
9	77716-79000	JOINT, outside rod	1	
10	83231-80100	ROD, outside handle	1	
11	09161-04008	WASHER (4x12x2)	1	
12	09161-06008	WASHER (6.5x13x1)	2	
13	08332-11058	E RING	1	
14	82810-83000	HANDLE, outside	1	
15	82891-80100	SNAP	1	
16	08316-26068	NUT	2	
17	83912-80120	FILM, water proof	1	
18	82660-80100	STRIKER, door lock	1	
19	78199-79000	SPACER, striker	0-1	
20	09137-08006	SCREW	2	
21	78251-68201	STOP MALE, door	1	
22	77891-63100	SPACER, stop male	0-2	
23	78261-68201	STOP FEMALE, door	1	
24	02112-06163	SCREW	4	
25	08321-21063	LOCK WASHER	4	

SJ413-4 E1

FIG. 122

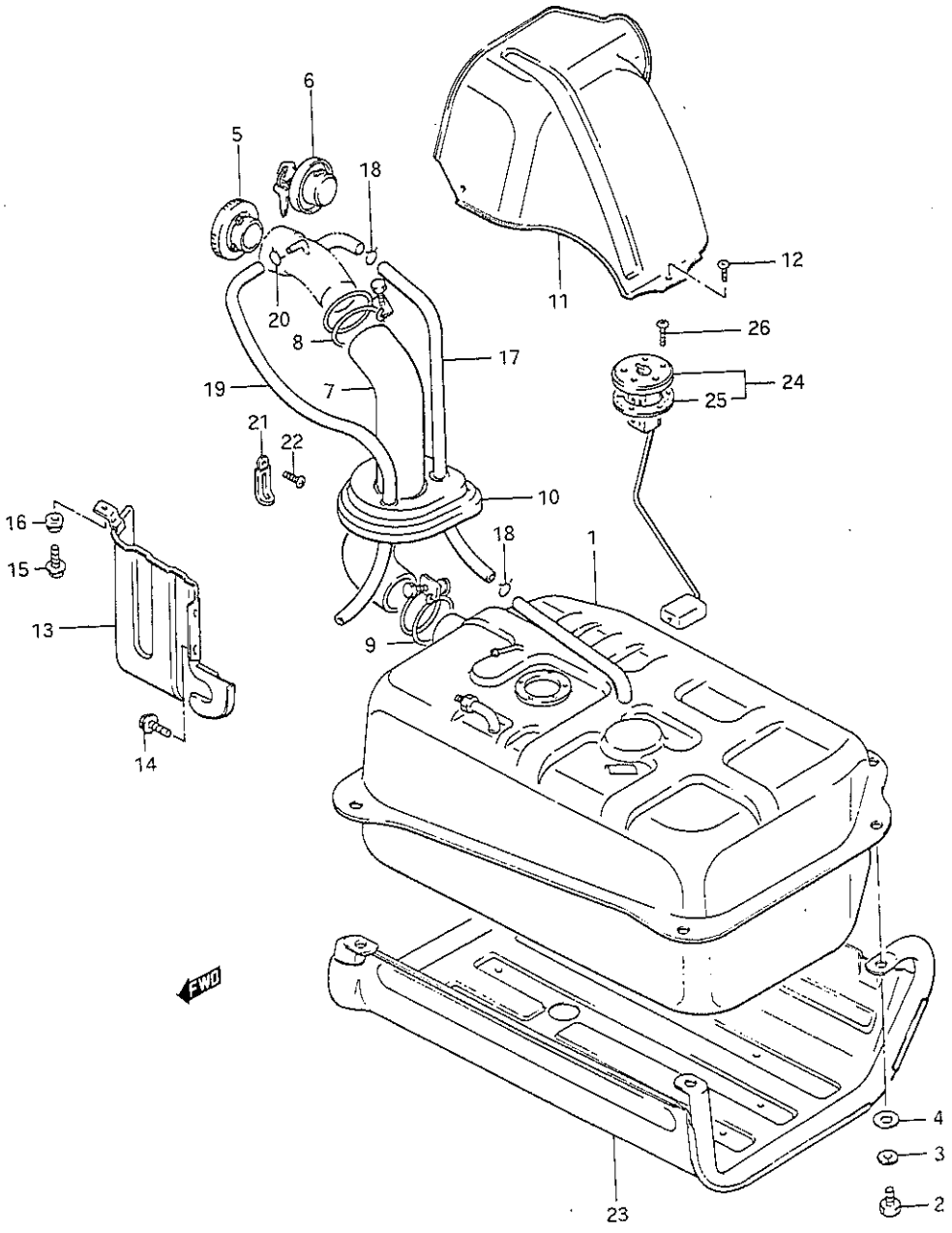

FIG.122(2-F- 2) FUEL TANK

REF.NO.	PART NO.	DESCRIPTION	Q'TY Q/W	Q'TY V	REMARKS
1	89101-80026	TANK ASSY, fuel	1	1	
2	01107-10303	BOLT	4	4	
3	08321-31103	LOCK WASHER	4	4	
4	09160-10001	WASHER (10.5x24x2.3)	4	4	
5	85410-79202	CAP ASSY, fuel tank	1	1	
6	85410-73022	CAP ASSY, fuel tank	1	-	E9,with key plate
7	89241-83020	PIPE, inlet joint	1	1	
8	09400-60301	CLAMP, upper	1	1	
9	09400-53301	CLAMP, lower	1	1	
10	89281-80000	DUST SEAL, inlet pipe	1	1	
11-1	89311-80000	PROTECTOR, pipe upper	1	1	
11-2	89311-80300	PROTECTOR, pipe upper	1	-	W
12	02142-06108	SCREW	3	3	
13	89312-83020	PROTECTOR, pipe lower	1	1	
14	01517-06106	BOLT	2	2	
15	09103-06089	BOLT	1	1	
16	09305-07003	BUSH	1	1	
17	09343-11016	HOSE, breather (L:410)	1	1	
18	09401-16301	CLIP	2	2	
19	09344-05036	HOSE, breather outlet	1	1	L:890
20	09401-08402	CLIP	1	1	
21	09404-06401	CLAMP	1	1	
22	03141-06108	SCREW	1	1	
23	89320-83001	PROTECTOR, fuel tank	1	1	
24	34810-80001	GAUGE ASSY, fuel level	1	1	
25	34825-67012	.GASKET	1	1	
26	02112-05088	SCREW	5	5	

Note : FIG.123(F-3) : E2,E6,E15,E16,E19,E25,E34,E54,E68,
E17,E22,E39(N/catalyzer)
FIG.124(F-4) : E17,E18,E22,E39(W/catalyzer)
E43

SJ413-4 E1

FIG. 123

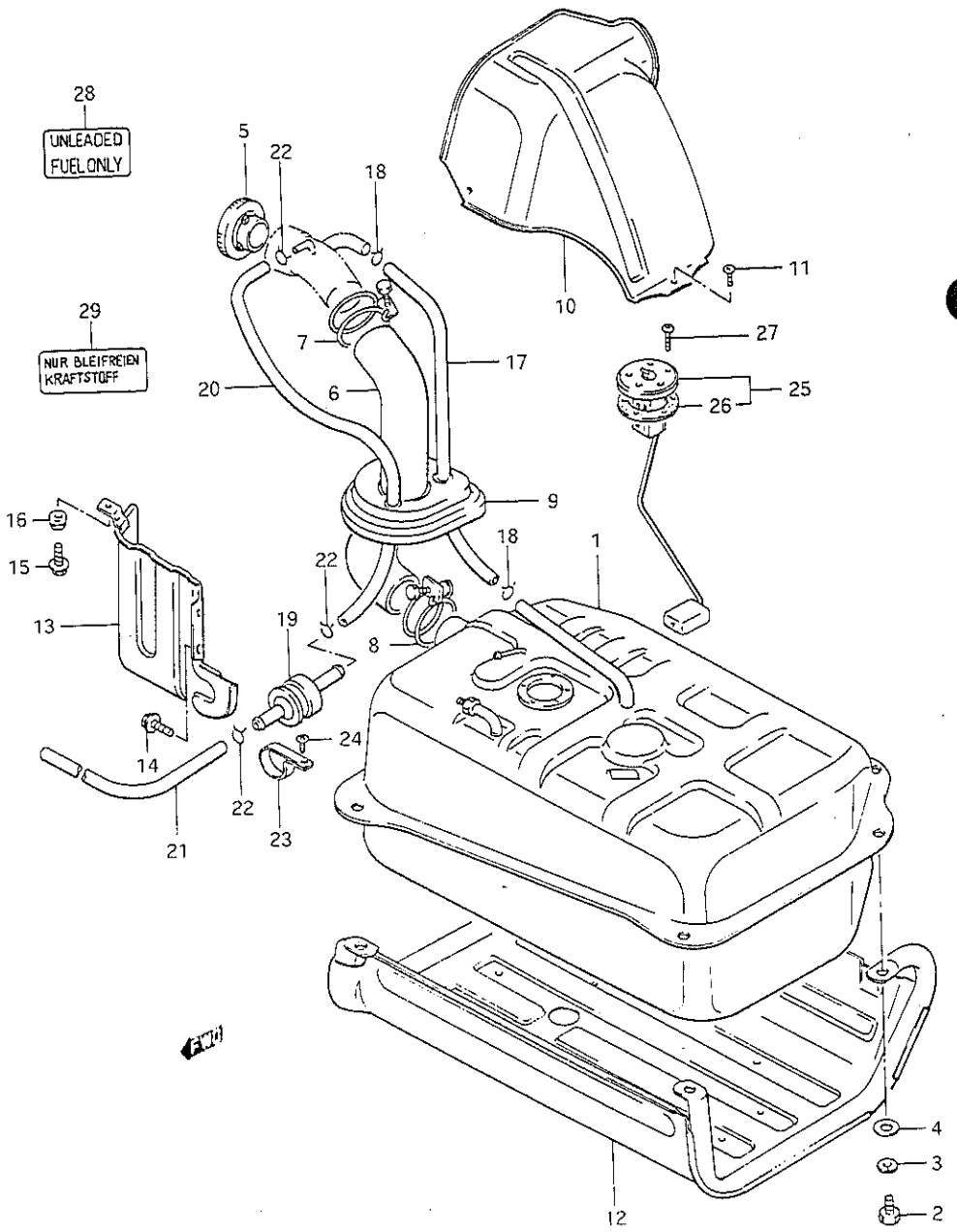

FIG.123(2-F- 3) FUEL TANK (E2,E6,E15,E16,E17,E19,E22,E25,E34,E39,E54,E68)

REF.NO.	PART NO.	DESCRIPTION	Q'TY Q/W	Q'TY V	REMARKS
1	89101-80026	TANK ASSY, fuel	1	1	
2	01107-10303	BOLT	4	4	
3	08321-31103	LOCK WASHER	4	4	
4	09160-10001	WASHER (10.5x24x2.3)	4	4	
5	85410-79202	CAP ASSY, fuel tank	1	1	
6	89241-83020	PIPE, inlet joint	1	1	
7	09400-60301	CLAMP, upper	1	1	
8	09400-53301	CLAMP, lower	1	1	
9	89281-80000	DUST SEAL, inlet pipe	1	1	
10-1	89311-80000	PROTECTOR, pipe upper	1	1	
10-2	89311-80300	PROTECTOR, pipe upper	1	-	W
11	02142-06108	SCREW	3	3	
12	89320-83001	PROTECTOR, fuel tank	1	1	
13	89312-83030	PROTECTOR, pipe lower	1	1	
14	01517-06106	BOLT	2	2	
15	09103-06089	BOLT	1	1	
16	09305-07003	BUSH	1	1	
17	09343-11016	HOSE (11x16x410)	1	1	
18	09401-16301	CLIP	2	2	
19	85451-75100	VALVE, 2 way check	1	1	
20	09344-05014	HOSE, inlet (L:950→200)	1	1	
21	09344-05014	HOSE, outlet (L:950→770)	1	1	
22	09401-08402	CLIP	3	3	
23	09403-23401	CLAMP	1	1	
24	03141-06108	SCREW	1	1	
25	34810-80001	GAUGE ASSY, fuel level	1	1	
26	34825-67012	.GASKET	1	1	
27	02112-05088	SCREW	5	5	
28	86932-73060	LABEL, fuel caution	1	1	
29	79115-83000	LABEL, fuel caution	1	1	E22,E39

Note : E17,E22,E39(W/catalyzer) see next fig.

SJ413-4 E1

FIG. 124

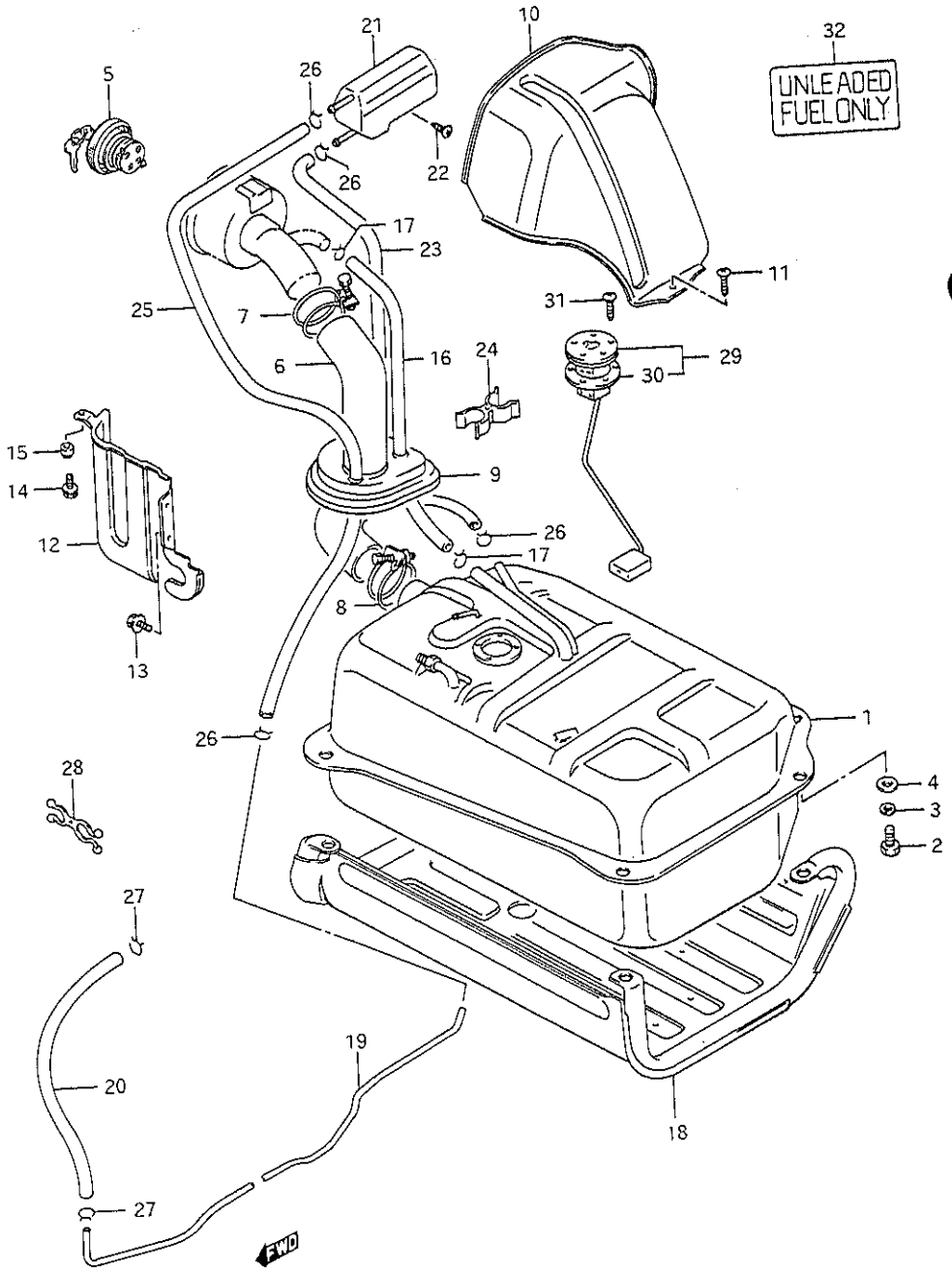

SJ413-4 E1

FIG.124(2-F- 4) FUEL TANK (E17,E18,E22,E39:W/CATALYZER AND E43)

REF.NO.	PART NO.	DESCRIPTION	Q'TY Q/W	Q'TY V	REMARKS
1	89101-80036	TANK ASSY, fuel	1	1	
2	01107-10303	BOLT	4	4	
3	08321-31103	LOCK WASHER	4	4	
4	09160-10001	WASHER	4	4	
5	89260-80001	CAP ASSY, fuel filler	1	1	
6-1	89241-83020	HOSE, inlet joint	1	1	
6-2	89241-83030	HOSE, inlet joint	1	1	E43
7-1	09400-60301	CLAMP, upper	1	1	
7-2	09402-70501	CLAMP, upper	1	1	E43
8	09400-53301	CLAMP, lower	1	1	
9	89281-80010	DUST SEAL, inlet pipe	1	1	
10-1	89311-80000	PROTECTOR, pipe upper	1	1	
10-2	89311-80300	PROTECTOR, pipe upper	1	-	W
11	02142-06108	SCREW	3	3	
12	89312-83030	PROTECTOR, inlet pipe lower	1	1	
13	01517-06106	BOLT	2	2	
14	09103-06089	BOLT	1	1	
15	09305-07003	BUSH	1	1	
16-1	09343-11016	HOSE, breather (L:410)	1	1	
16-2	89291-83030	HOSE, breather (L:410)	1	1	E43
17-1	09401-16301	CLIP	2	2	
17-2	09401-15402	CLIP	2	2	E43
18	89320-83001	PROTECTOR, fuel tank	1	1	
19-1	89431-83301	PIPE, evaporation No.1	1	1	
19-2	89431-83500	PIPE, evaporation No.1	1	-	W
20	09343-05044	HOSE, canister inlet	1	1	L:1425→430
21	89411-80000	SEPARATOR, vapor liquid	1	1	
22	03141-06108	SCREW	1	1	
23	09352-50823-890	HOSE, separator inlet	1	1	L:890→690
24	09408-00050	CLAMP, canister inlet	1	1	
25	09352-50823-890	HOSE, separator outlet	1	1	L:890→485
26	09401-08402	CLIP	4	4	
27	09401-11402	CLIP, canister inlet hose	2	2	
28	09408-00013	CLAMP	2	2	

SJ413-4 E1

FIG. 124

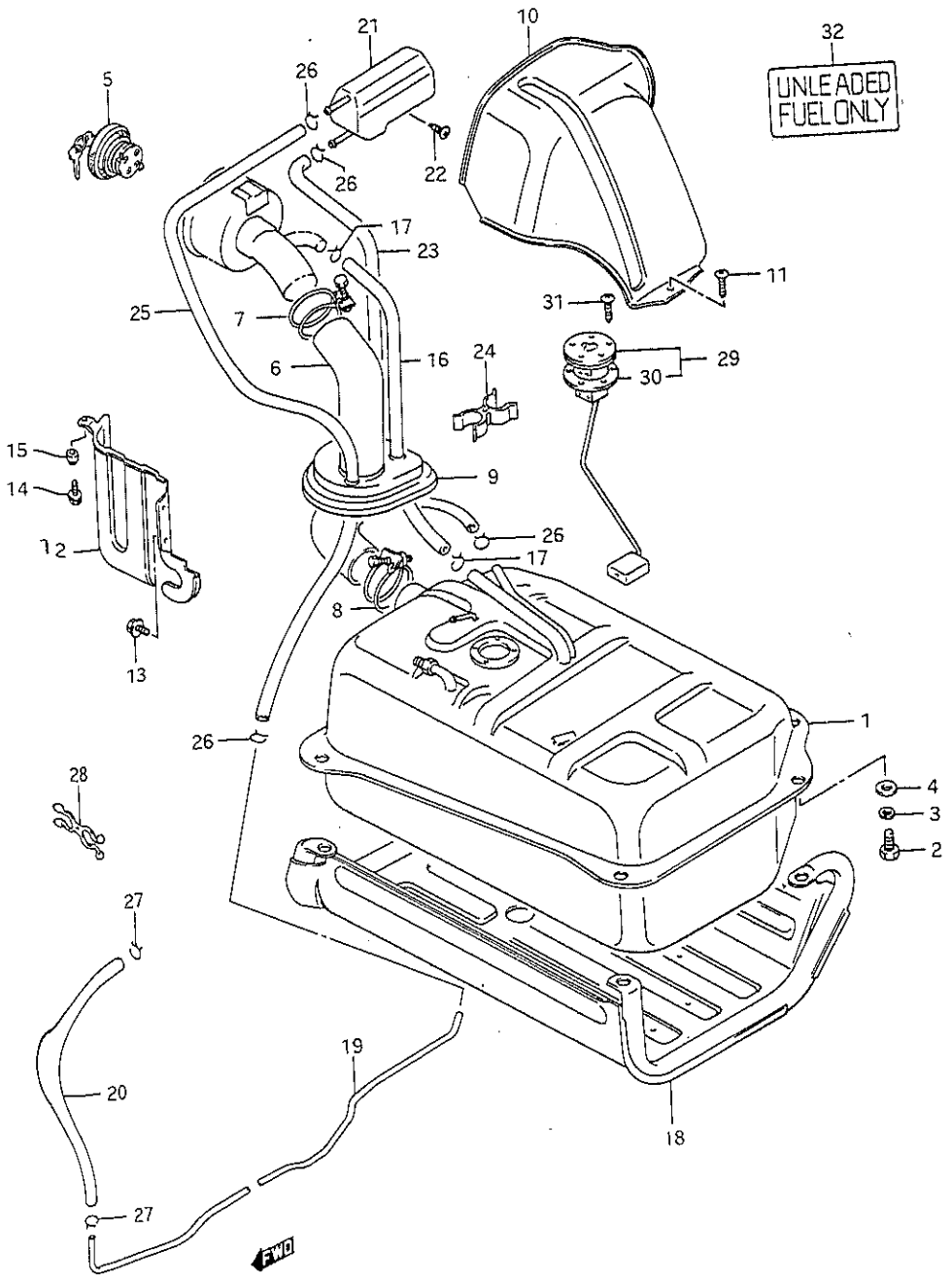

SJ413-4 E1

FIG.124(2-F- 5) FUEL TANK (E17,E18,E22,E39:W/CATALYZER AND E43)

REF.NO.	PART NO.	DESCRIPTION	Q'TY Q/W	Q'TY V	REMARKS
29	34810-80001	GAUGE ASSY, fuel level	1	1	
30	34825-67012	.GASKET	1	1	
31	02112-05088	SCREW	5	5	
32	86932-73060	LABEL, fuel caution	2	2	

SJ413-4 E1

FIG. 125

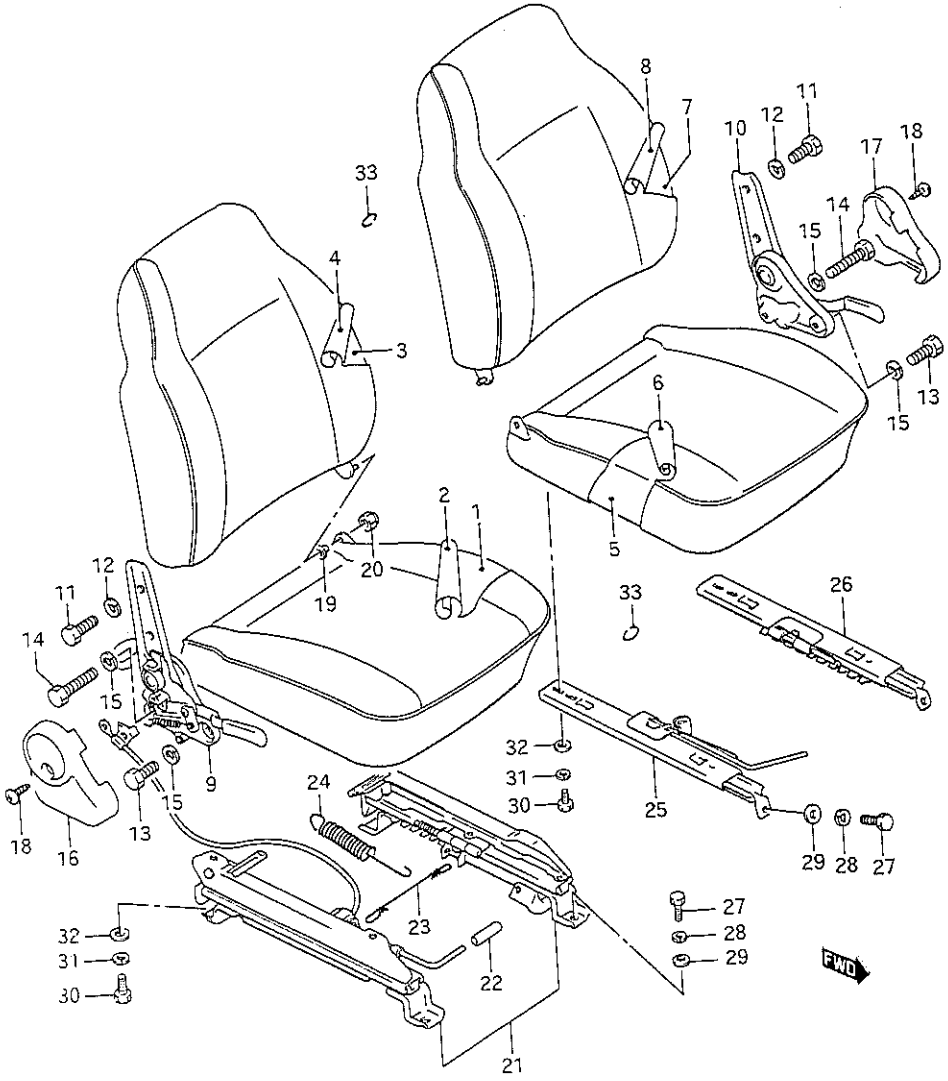

FIG.125(2-F- 6) FRONT SEAT (JA)

REF.NO.	PART NO.	DESCRIPTION	Q'TY Q/W	Q'TY V	REMARKS
1	85105-80290	CUSHION SUB ASSY, front RH	1	1	
2-1	85180-80610-2AL	COVER, cushion RH (Gray)	1	1	V:LHD
2-2	85180-80610-2AN	COVER, cushion RH (Brown)	1	1	V:LHD
2-3	85180-80590-2AL	COVER, cushion RH (Gray)	-	1	RHD,LHD:E44,E58,E94
2-4	85180-80590-2AL	COVER, cushion RH (Brown)	-	1	RHD,LHD:E44,E58,E94
2-5	85180-80610-2AL	COVER, cushion RH (Gray)	-	1	E2,E68
2-6	85180-80610-2AN	COVER, cushion RH (Brown)	-	1	E2,E68
3	85305-83010	BACK SUB ASSY, front RH	1	1	
4-1	85380-83010-2AL	COVER, back RH (Gray)	1	1	V:LHD
4-2	85380-83010-2AN	COVER, back RH (Brown)	1	1	V:LHD
4-3	85380-83110-2AL	COVER, back RH (Gray)	-	1	RHD,LHD:E44,E58,E94
4-4	85380-83110-2AN	COVER, back RH (Brown)	-	1	RHD,LHD:E44,E58,E94
4-5	85380-83010-2AL	COVER, back RH (Gray)	-	1	E2,E68
4-6	85380-83010-2AN	COVER, back RH (Brown)	-	1	E2,E68
5	85106-80290	CUSHION SUB ASSY, front LH	1	1	
6-1	85680-80610-2AL	COVER, cushion LH (Gray)	1	1	V:LHD
6-2	85680-80610-2AN	COVER, cushion LH (Brown)	1	1	V:LHD
6-3	85680-80590-2AL	COVER, cushion LH (Gray)	-	1	RHD,LHD:E44,E58,E94
6-4	85680-80590-2AN	COVER, cushion LH (Brown)	-	1	RHD,LHD:E44,E58,E94
6-5	85680-80610-2AL	COVER, cushion LH (Gray)	-	1	E2,E68
6-6	85680-80610-2AN	COVER, cushion LH (Brown)	-	1	E2,E68
7	85306-83010	BACK SUB ASSY, front LH	1	1	
8-1	85880-83010-2AL	COVER, back LH (Gray)	1	1	V:LHD
8-2	85880-83010-2AN	COVER, back LH (Brown)	1	1	V:LHD
8-3	85880-83110-2AL	COVER, back LH (Gray)	-	1	RHD,LHD:E44,E58,E94
8-4	85880-83110-2AN	COVER, back LH (Brown)	-	1	RHD,LHD:E44,E58,E94
8-5	85880-83010-2AL	COVER, back LH (Gray)	-	1	E2,E68
8-6	85880-83010-2AN	COVER, back LH (Brown)	-	1	E2,E68

Note : E15,E18,E22,E39,E43,E54,E59 See next fig.

SJ413-4 E1

FIG. 125

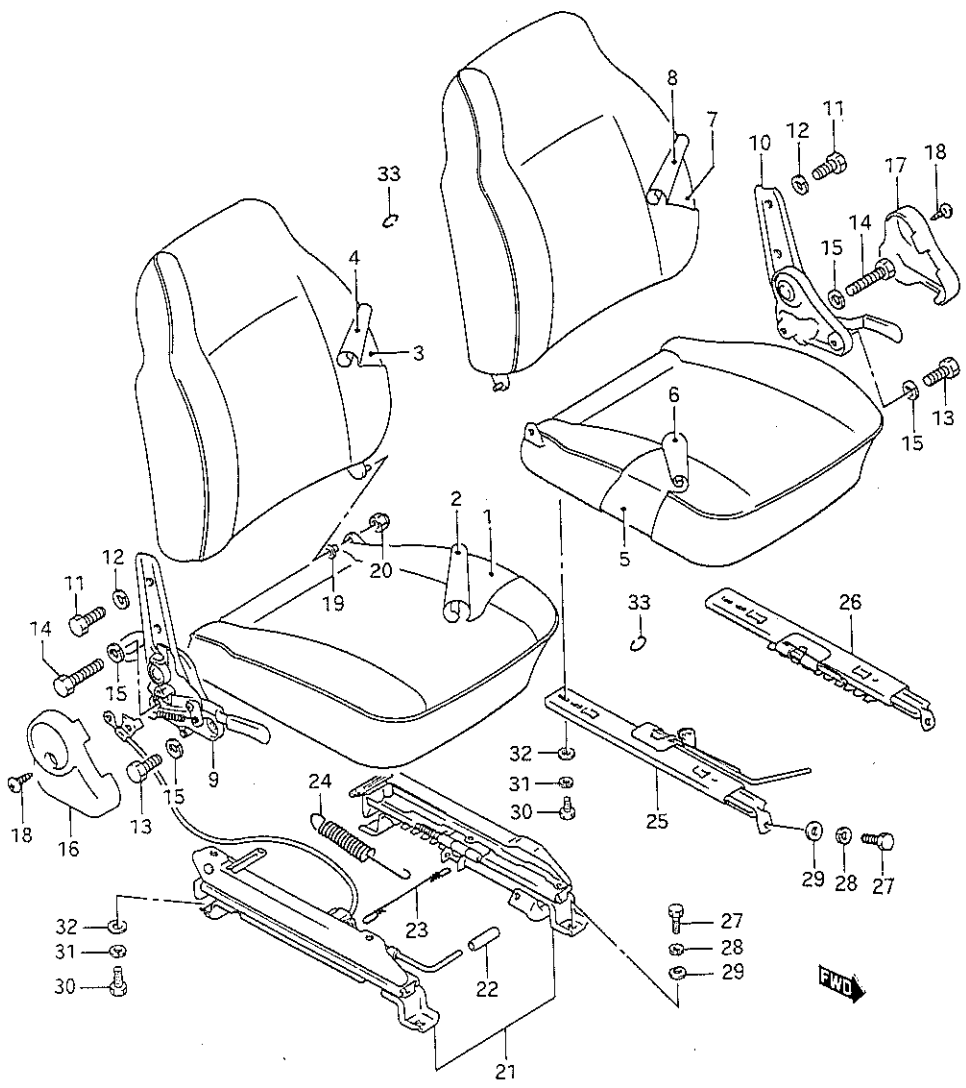

FIG.125(2-F- 7) FRONT SEAT (JA)

REF.NO.	PART NO.	DESCRIPTION	Q'TY Q/W	Q'TY V	REMARKS
9-1	85210-83001	RECLINING ASSY, RH	1	1	LHD
9-2	85210-80290	RECLINING ASSY, RH	1	1	RHD
10-1	85710-80290	RECLINING ASSY, LH	1	1	LHD
10-2	85710-83001	RECLINING ASSY, LH	1	1	RHD
11	01107-08166	BOLT	4	4	
12	08321-21086	LOCK WASHER	4	4	
13	01107-10166	BOLT	2	2	
14	01107-10406	BOLT	2	2	
15	08321-21106	LOCK WASHER	4	4	
16-1	85221-82001-5CW	COVER, reclining RH (Brown)	1	1	
16-2	85221-82001-281	COVER, reclining RH (Black)	1	1	
17-1	85721-82001-5CW	COVER, reclining LH (Brown)	1	1	
17-2	85721-82001-281	COVER, reclining LH (Black)	1	1	
18	03241-05125	SCREW	2	2	
19	85291-80290	BUSH	2	2	
20	08313-21085	NUT	2	2	
21-1	86701-83030	WALK IN ASSY	1	1	LHD,RH SEAT
21-2	86901-83030	WALK IN ASSY	1	1	RHD,LH SEAT
22	86736-83000	.KNOB, lock handle	1	1	
23	86731-83000	.ROD, walk in	1	1	
24	86732-83030	.SPRING, walk in	1	1	
25-1	86601-80134	RAIL ASSY, inside	1	1	LHD,LH SEAT
25-2	86602-80133	RAIL ASSY, inside	1	1	RHD,RH SEAT
26-1	86602-80133	RAIL ASSY, outside	1	1	LHD,LH SEAT
26-2	86601-80134	RAIL ASSY, outside	1	1	RHD,RH SEAT
27	01107-06166	BOLT	8	8	
28	08321-21066	LOCK WASHER	8	8	
29	08322-21066	WASHER	8	8	
30	01107-08166	BOLT	8	8	
31	08321-21086	LOCK WASHER	8	8	
32	08322-11086	WASHER	8	8	
33	09387-19001	RING	AR	AR	

SJ413-4 E1

FIG. 126

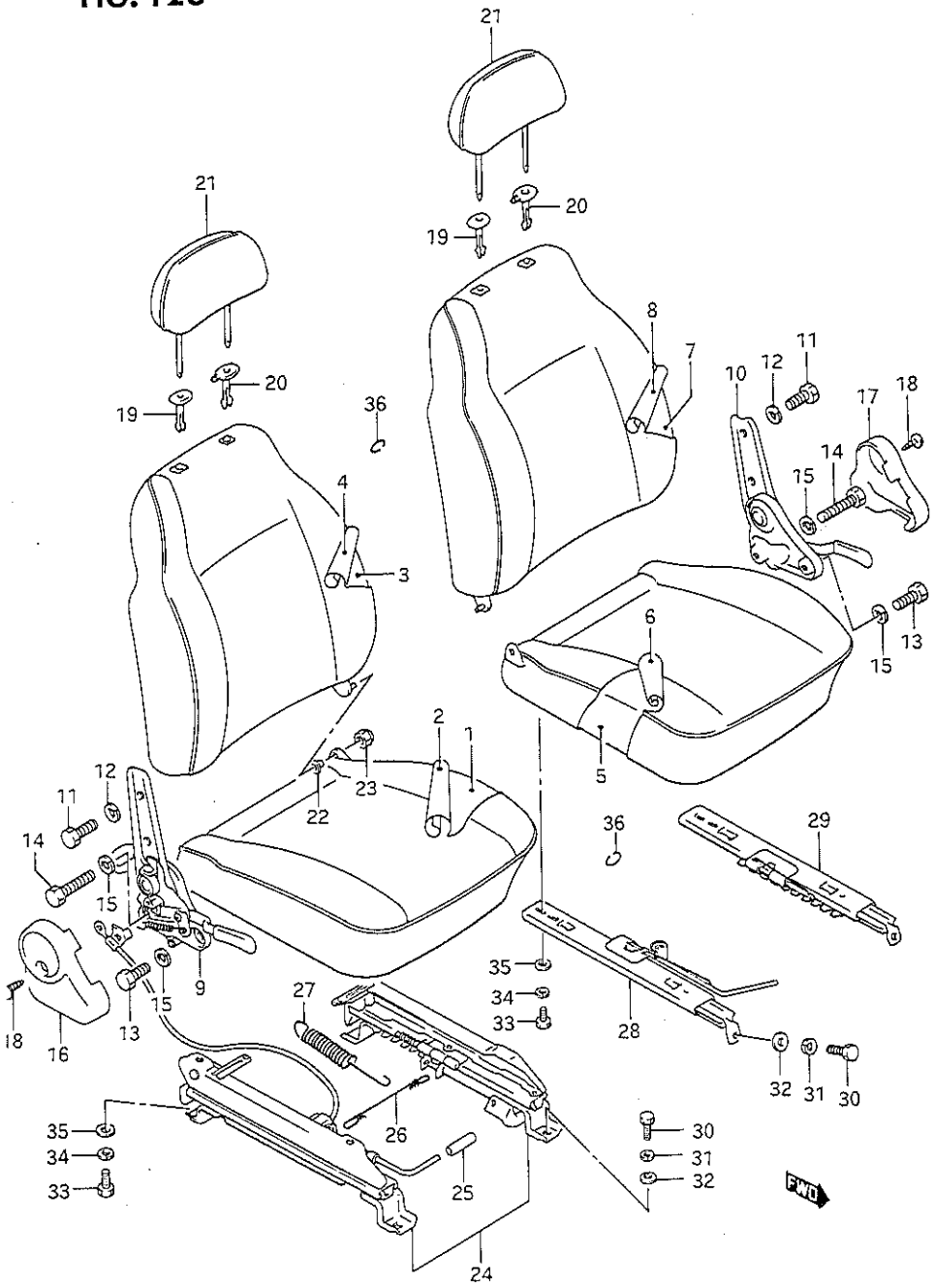

FIG.126(2-F- 8) FRONT SEAT (JA:E15,E18,E22,E34,E39,E43,E54,E59)

REF.NO.	PART NO.	DESCRIPTION	Q'TY Q/W	Q'TY V	REMARKS
1	85105-80310	CUSHION SUB ASSY, front RH	1	1	
2-1	85180-80620-2AL	COVER, cushion RH (Gray)	1	1	
2-2	85180-80620-2AN	COVER, cushion RH (Brown)	1	1	
2-3	85180-80620-2AM	COVER, cushion RH (Gray)	1	-	E43
2-4	85180-80620-2AP	COVER, cushion RH (Brown)	1	-	E43
2-5	85180-80600-2AM	COVER, cushion RH (Gray)	-	1	E43
2-6	85180-80600-2AP	COVER, cushion RH (Brown)	-	1	E43
2-7	85180-80600-2AL	COVER, cushion RH (Gray)	-	1	E59
2-8	85180-80600-2AN	COVER, cushion RH (Brown)	-	1	E59
3	85305-80310	BACK SUB ASSY, front RH	1	1	
4-1	85380-80620-2AL	COVER, back RH (Gray)	1	1	
4-2	85380-80620-2AN	COVER, back RH (Brown)	1	1	
4-3	85380-80620-2AM	COVER, back RH (Gray)	1	-	E43
4-4	85380-80620-2AP	COVER, back RH (Brown)	1	-	E43
4-5	85380-80600-2AM	COVER, back RH (Gray)	-	1	E43
4-6	85380-80600-2AP	COVER, back RH (Brown)	-	1	E43
4-7	85380-80600-2AL	COVER, back RH (Gray)	-	1	E59
4-8	85380-80600-2AN	COVER, back RH (Brown)	-	1	E59
5	85106-80310	CUSHION SUB ASSY, front LH	1	1	
6-1	85680-80620-2AL	COVER, cushion LH (Gray)	1	1	
6-2	85680-80620-2AN	COVER, cushion LH (Brown)	1	1	
6-3	85680-80620-2AM	COVER, cushion LH (Gray)	1	-	E43
6-4	85680-80620-2AP	COVER, cushion LH (Brown)	1	-	E43
6-5	85680-80600-2AM	COVER, cushion LH (Gray)	-	1	E43
6-6	85680-80600-2AP	COVER, cushion LH (Brown)	-	1	E43
6-7	85680-80600-2AL	COVER, cushion LH (Gray)	-	1	E59
6-8	85680-80600-2AN	COVER, cushion LH (Brown)	-	1	E59
7	85306-80310	BACK SUB ASSY, front LH	1	1	
8-1	85880-80620-2AL	COVER, back LH (Gray)	1	1	
8-2	85880-80620-2AN	COVER, back LH (Brown)	1	1	
8-3	85880-80620-2AM	COVER, back LH (Gray)	1	-	E43
8-4	85880-80620-2AP	COVER, back LH (Brown)	1	-	E43
8-5	85880-80600-2AM	COVER, back LH (Gray)	-	1	E43
8-6	85880-80600-2AP	COVER, back LH (Brown)	-	1	E43
8-7	85880-80600-2AL	COVER, back LH (Gray)	-	1	E59
8-8	85880-80600-2AN	COVER, back LH (Brown)	-	1	E59

SJ413-4 E1

FIG. 126

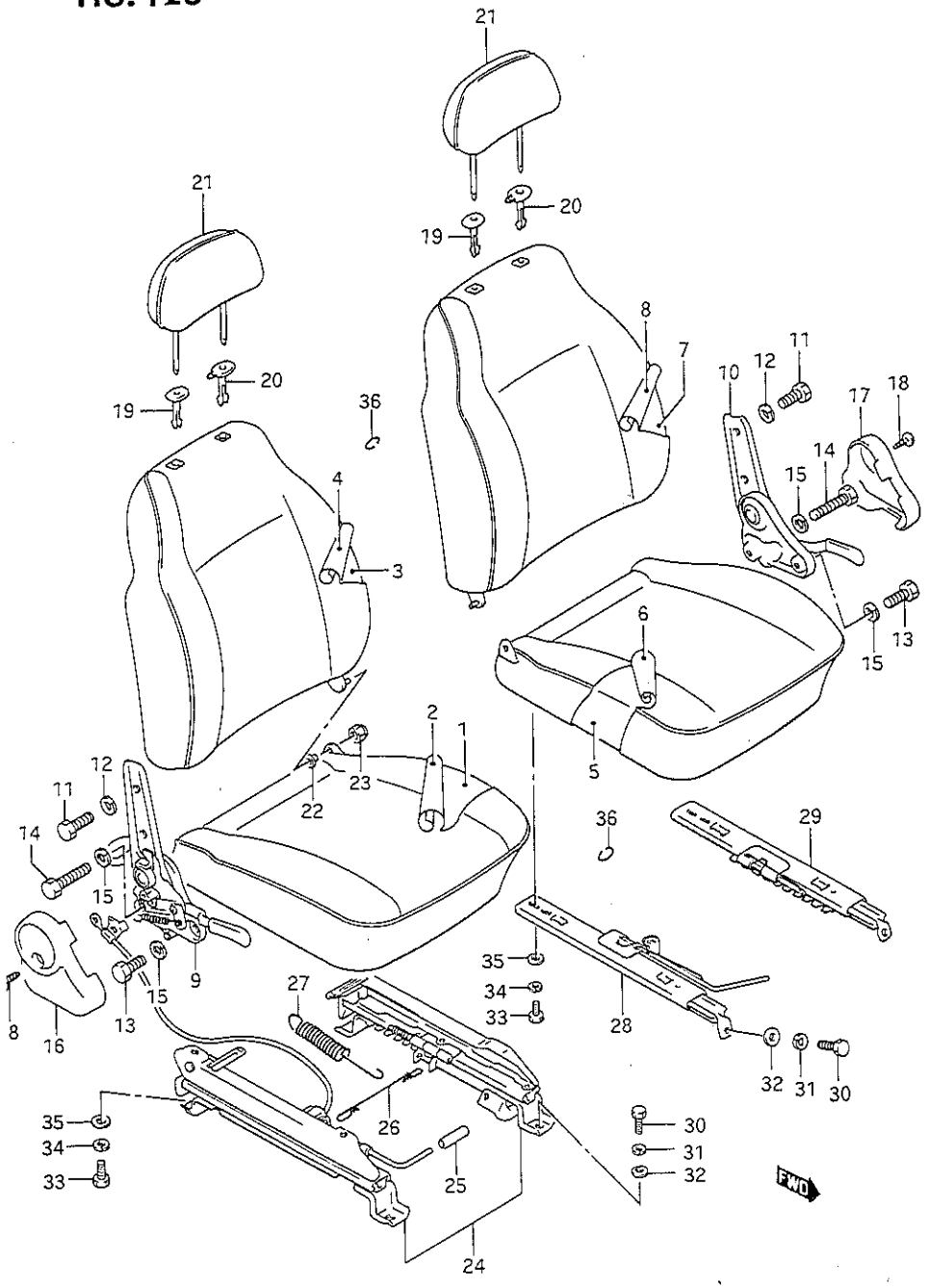

FIG.126(2-F- 9) FRONT SEAT (JA:E15,E18,E22,E34,E39,E43,E54,E59)

REF.NO.	PART NO.	DESCRIPTION	Q'TY Q/W	Q'TY V	REMARKS
9	85210-83001	RECLINING ASSY, RH	1	1	
10	85710-80290	RECLINING ASSY, LH	1	1	
11	01107-08166	BOLT	4	4	
12	08321-21086	LOCK WASHER	4	4	
13	01107-10166	BOLT	2	2	
14	01107-10406	BOLT	2	2	
15	08321-21106	LOCK WASHER	4	4	
16-1	85221-82001-5CW	COVER, reclining RH (Brown)	1	1	
16-2	85221-82001-281	COVER, reclining RH (Black)	1	1	
17-1	85721-82001-5CW	COVER, reclining LH (Brown)	1	1	
17-2	85721-82001-281	COVER, reclining LH (Black)	1	1	
18	03241-05125	SCREW	2	2	
19	85391-80290	GUIDE, headrestraint RH	2	2	
20	85890-80290	GUIDE, headrestraint LH	2	2	
21-1	86401-80291-5GS	HEADRESTRAINT ASSY (Brown)	2	2	
21-2	86401-80291-5GU	HEADRESTRAINT ASSY (Black)	2	2	
22	85291-80290	BUSH	2	2	
23	08313-21085	NUT	2	2	
24	86701-83030	WALK IN ASSY	1	1	
25	86736-83000	.KNOB, lock handle	1	1	
26	86731-83000	.ROD, walk in	1	1	
27	86732-83030	.SPRING, walk in	1	1	
28	86601-80134	RAIL ASSY, inside	1	1	LH SEAT
29	86602-80133	RAIL ASSY, outside	1	1	LH SEAT
30	01107-06166	BOLT	8	8	
31	08321-21066	LOCK WASHER	8	8	
32	08322-21066	WASHER	8	8	
33	01107-08166	BOLT	8	8	
34	08322-21066	WASHER	8	8	
35	08322-11086	WASHER	8	8	
36	09387-19001	RING	AR	AR	

SJ413-4 E1

FIG.127

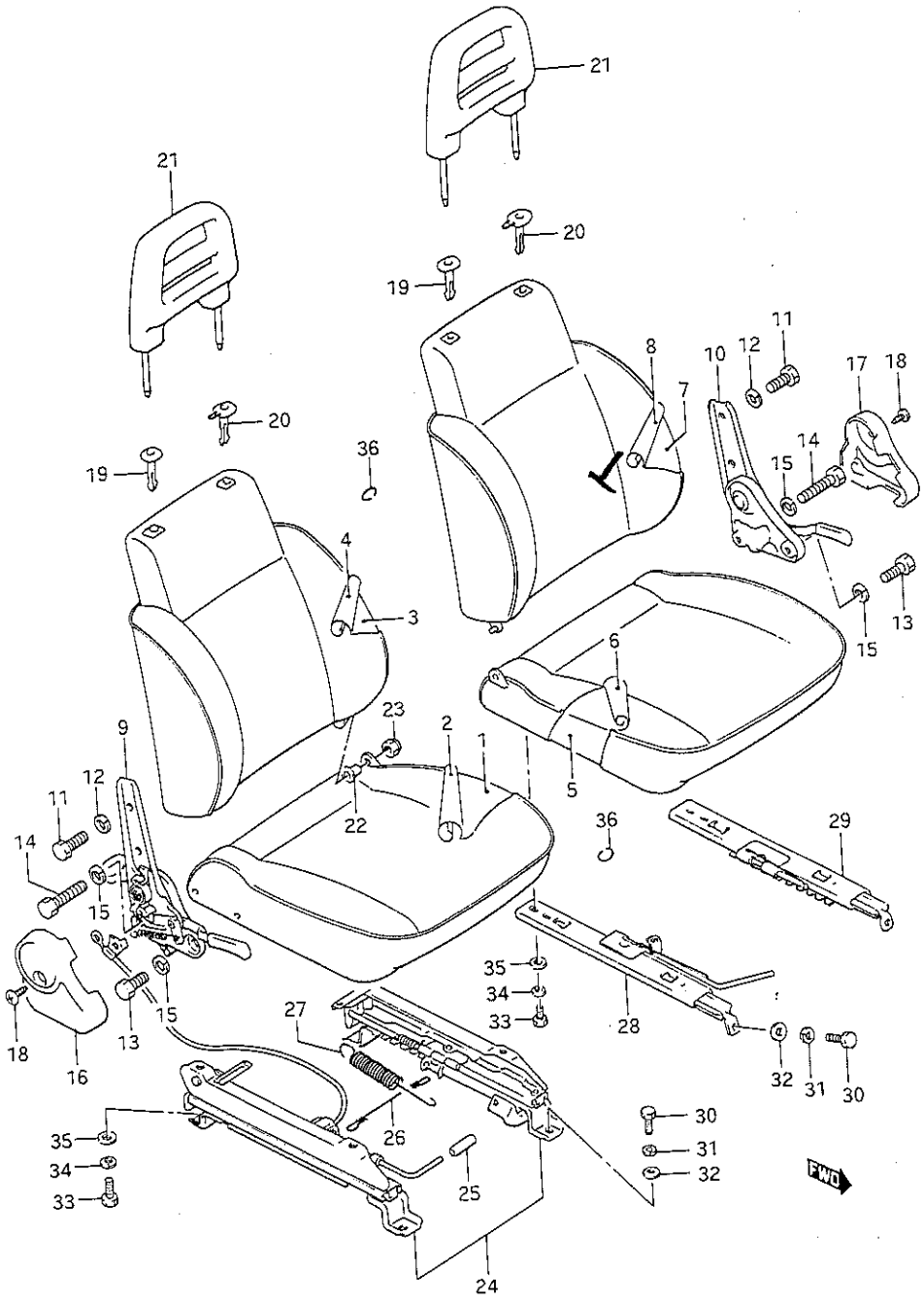

FIG.127(2-F-10) FRONT SEAT (JX)

REF.NO.	PART NO.	DESCRIPTION	Q'TY Q/W	Q'TY V	REMARKS
1	85105-83000	CUSHION SUB ASSY, front RH	1	1	
2-1	85180-83000-2AJ	COVER, cushion RH (Gray)	1	-	
2-2	85180-83000-2AK	COVER, cushion RH (Brown)	1	-	
2-3	85180-83100-9YW	COVER, cushion RH (Gray)	1	1	W/resin top
2-4	85180-83100-9YZ	COVER, cushion RH (Brown)	1	1	W/resin top
3	85305-83000	BACK SUB ASSY, front RH	1	1	
4-1	85380-83000-2AJ	COVER, back RH (Gray)	1	-	
4-2	85380-83000-2AK	COVER, back RH (Brown)	1	-	
4-3	85380-83100-9YW	COVER, back RH (Gray)	1	1	W/resin top
4-4	85380-83100-9YZ	COVER, back RH (Brown)	1	1	W/resin top
5	85106-83000	CUSHION SUB ASSY, front LH	1	1	
6-1	85680-83000-2AJ	COVER, cushion LH (Gray)	1	-	
6-2	85680-83000-2AK	COVER, cushion LH (Brown)	1	-	
6-3	85680-83100-9YW	COVER, cushion LH (Gray)	1	1	W/resin top
6-4	85680-83100-9YZ	COVER, cushion LH (Brown)	1	1	W/resin top
7	85306-83000	BACK SUB ASSY, front LH	1	1	
8-1	85880-83000-2AJ	COVER, back LH (Gray)	1	-	
8-2	85880-83000-2AK	COVER, back LH (Brown)	1	-	
8-3	85880-83100-9YW	COVER, back LH (Brown)	1	-	W/resin top
8-4	85880-83100-9YZ	COVER, back LH (Brown)	1	1	W/resin top
9-1	85210-83001	RECLINING ASSY, RH	1	1	LHD
9-2	85210-80290	RECLINING ASSY, RH	1	1	RHD
10-1	85710-80290	RECLINING ASSY, LH	1	1	LHD
10-2	85710-83001	RECLINING ASSY, LH	1	1	RHD
11	01107-08166	BOLT	4	4	
12	08321-21086	LOCK WASHER	4	4	
13	01107-10166	BOLT	2	2	
14	01107-10406	BOLT	2	2	
15	08321-21106	LOCK WASHER	4	4	
16-1	85221-82001-5CW	COVER, reclining RH (Brown)	1	1	
16-2	85221-82001-281	COVER, reclining RH (Black)	1	1	
17-1	85721-82001-5CW	COVER, reclining LH (Brown)	1	1	
17-2	85721-82001-281	COVER, reclining LH (Black)	1	1	
18	03241-05125	SCREW	2	2	
19	85391-80290	GUIDE, headrestraint RH	2	2	

SJ413-4 E1

FIG.127

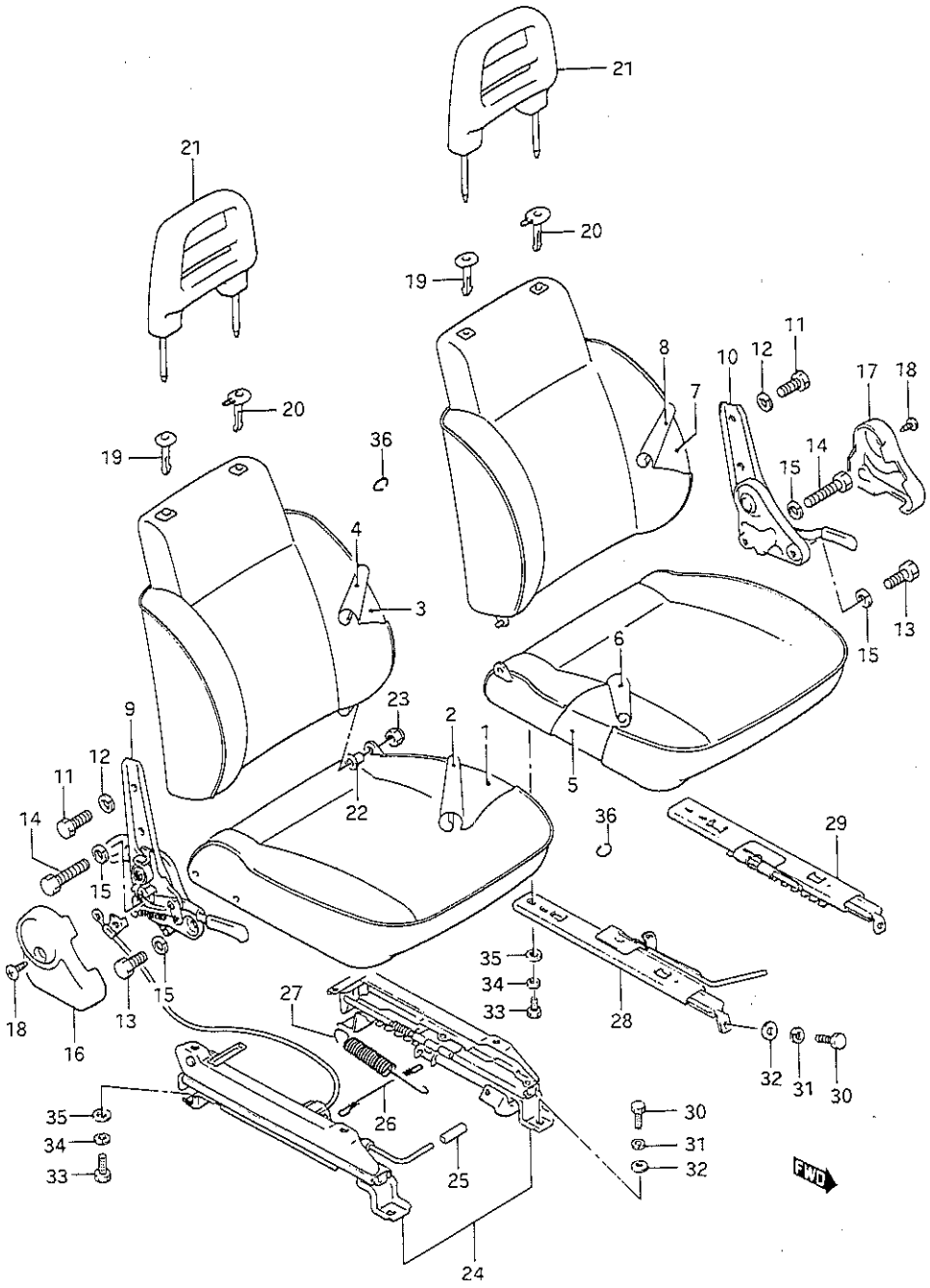

FIG.127(2-F-11) FRONT SEAT (JX)

REF.NO.	PART NO.	DESCRIPTION	Q'TY Q/W	Q'TY V	REMARKS
20	85890-83000	GUIDE, headrestraint LH	2	2	
21-1	86401-70A00-5GS	HEADRESTRAINT ASSY (Brown)	2	2	
21-2	86401-70A00-5GU	HEADRESTRAINT ASSY (Black)	2	2	
22	85291-80290	BUSH	2	2	
23	08313-21085	NUT	2	2	
24-1	86701-83030	WALK IN ASSY	1	1	LHD,RH SEAT
24-2	86901-83030	WALK IN ASSY	1	1	RHD,LH SEAT
25	86736-83000	.KNOB, lock handle	1	1	
26	86731-83000	.ROD, walk in	1	1	
27	86732-83030	.SPRING, walk in	1	1	
28-1	86601-80134	RAIL ASSY, inside	1	1	LHD,LH SEAT
28-2	86602-80133	RAIL ASSY, inside	1	1	RHD,RH SEAT
29-1	86602-80133	RAIL ASSY, outside	1	1	LHD,LH SEAT
29-2	86601-80134	RAIL ASSY, outside	1	1	RHD,RH SEAT
30	01107-06166	BOLT	8	8	
31	08321-21066	LOCK WASHER	8	8	
32	08322-21066	WASHER	8	8	
33	01107-08166	BOLT	8	8	
34	08321-21086	LOCK WASHER	8	8	
35	08322-11086	WASHER	8	8	
36	09387-19001	RING	AR	AR	

SJ413-4 E1

FIG.128

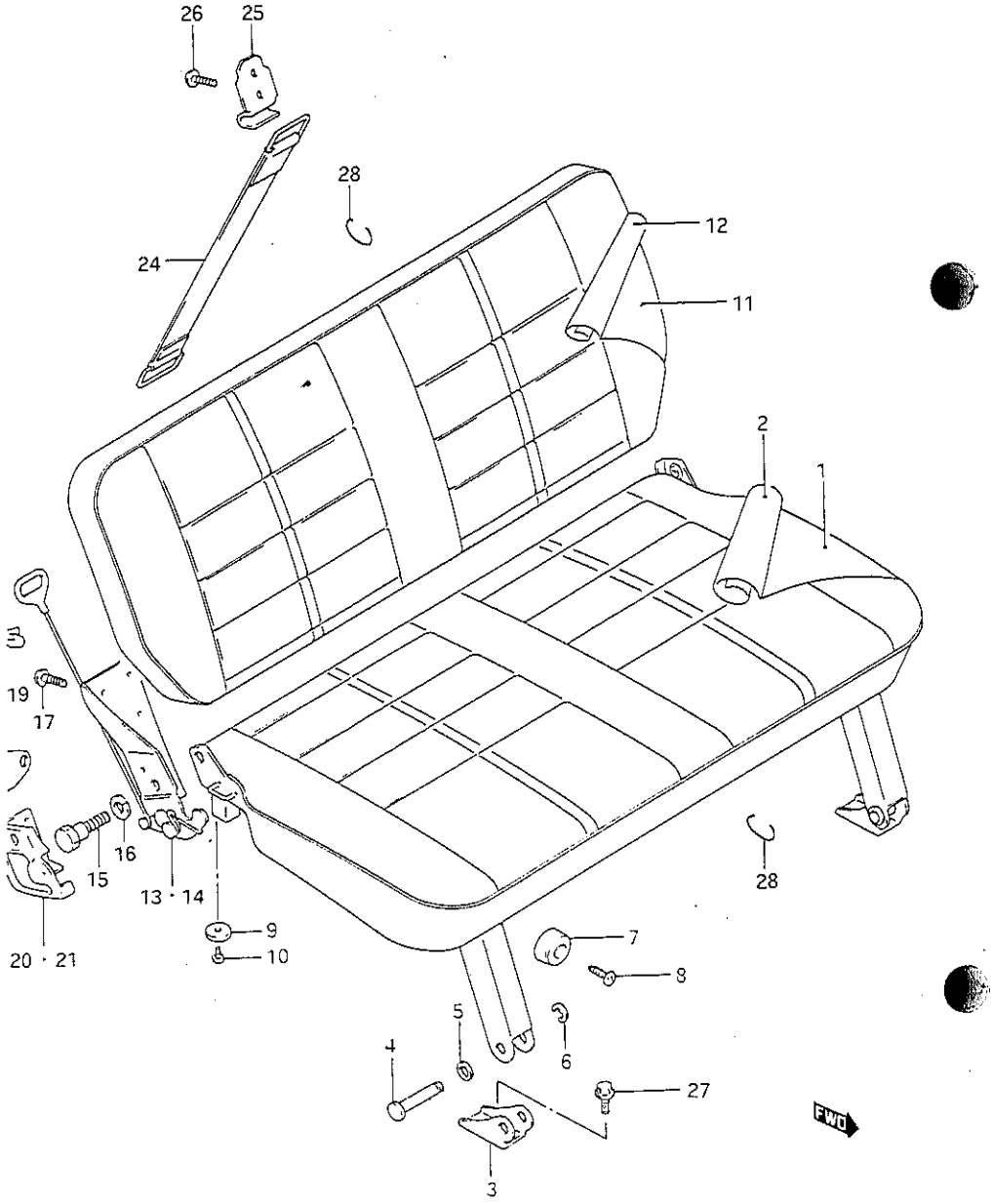

FIG.128(2-F-12) REAR SEAT (JA)

REF.NO.	PART NO.	DESCRIPTION	Q'TY Q/W	Q'TY V	REMARKS
1	87105-80820	CUSHION SUB ASSY, seat	1	1	
2-1	87180-80580-2AL	COVER, cushion (Gray)	1	1	
2-2	87180-80580-2AN	COVER, cushion (Brown)	1	1	
2-3	87180-80600-2AM	COVER, cushion (Gray)	1	1	E43
2-4	87180-80600-2AP	COVER, cushion (Brown)	1	1	E43
2-5	87180-80600-2AL	COVER, cushion (Gray)	1	1	E59
2-6	87180-80600-2AN	COVER, cushion (Brown)	1	1	E59
3	87271-80280	MALE, seat hinge	2	2	
4	09208-06001	PIN	2	2	
5	09164-07001	WASHER	2	2	
6	08332-11046	E RING	2	2	
7	09320-06006	CUSHION	2	2	
8	03142-05209	SCREW	2	2	
9	09320-06015	CUSHION	2	2	
10	03242-05129	SCREW	2	2	
11	87305-80810	BACK SUB ASSY, seat	1	1	
12-1	87380-80550-2AL	COVER, back (Gray)	1	1	
12-2	87380-80550-2AN	COVER, back (Brown)	1	1	
12-3	87380-80590-2AM	COVER, back (Gray)	1	1	E43
12-4	87380-80590-2AP	COVER, back (Brown)	1	1	E43
12-5	87380-80590-2AL	COVER, back (Gray)	1	1	E59
12-6	87380-80590-2AN	COVER, back (Brown)	1	1	E59

Note
FIG.129(F-14) : Q,V JA E2,E15,E18,E22,E25,E34,E39,E54
FIG.130(F-15) : W JA E2,E18,E22,E25,E54
FIG.131(G- 2) : Q,W JX
FIG.132(G- 4) : JX E2,E6,E15,E16,E17,E18,E22,E25,E34,E39,E53,E68
FIG.133(G- 5) : HIGH ROOF
FIG.134(G- 6) : HIGH ROOF E15,E16,E17,E18,E22,E25,E34,E39,E53
FIG.135(G- 7) : W JX
FIG.136(G- 8) : W JX E2,E6,E15,E16,E17,E18,E22,E25,E34,E53
FIG.137(G- 9) : JX SEPARATE TYPE
FIG.138(G-12) : W F
FIG.139(G-13) : W JX RESIN TOP

SJ413-4 E1

FIG.128

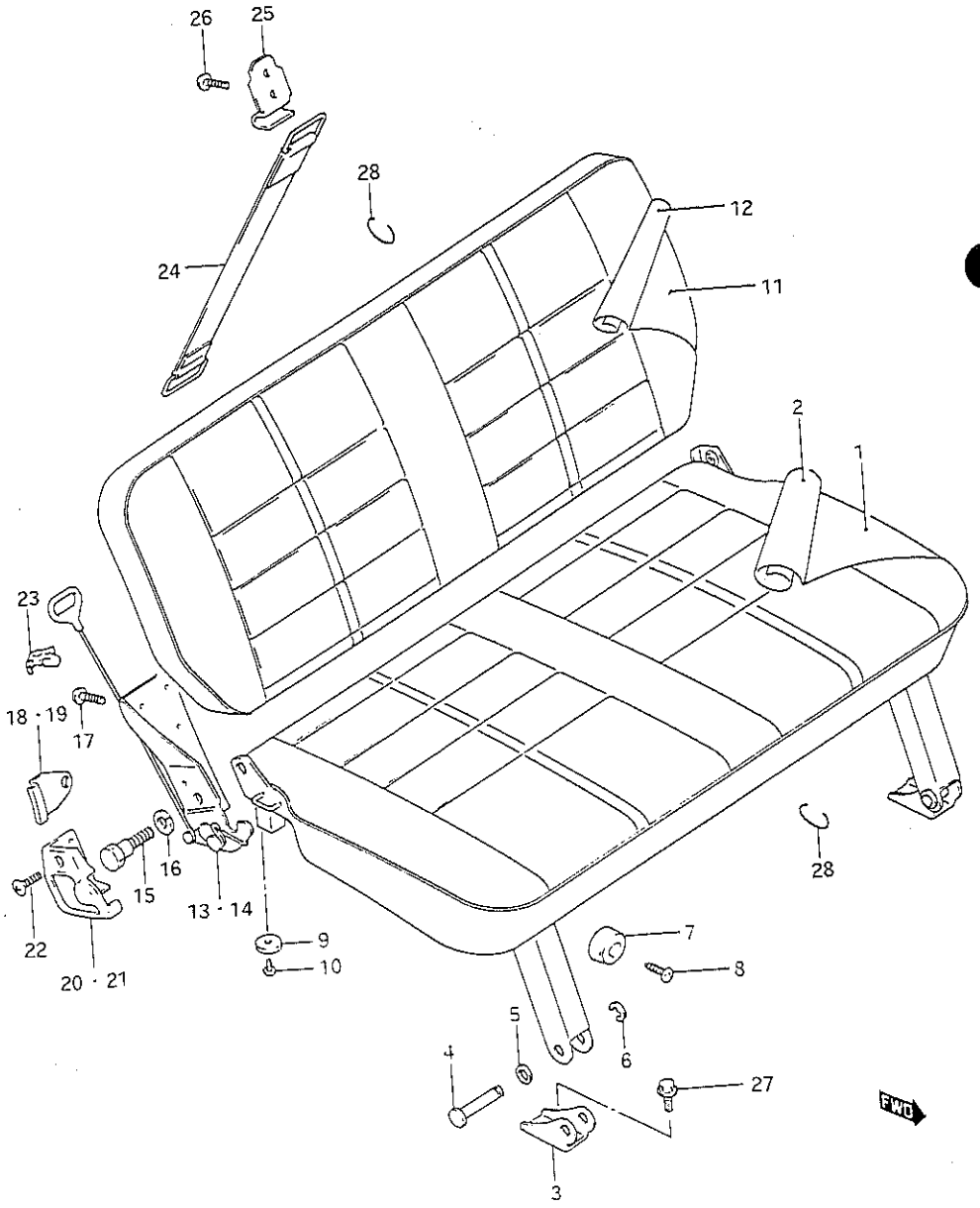

FIG.128(2-F-13) REAR SEAT (JA)

REF.NO.	PART NO.	DESCRIPTION	Q'TY Q/W	Q'TY V	REMARKS
13	87210-80200	LOCK, hinge RH	1	1	
14	87610-80200	LOCK, hinge LH	1	1	
15	09111-08044	BOLT	2	2	
16	08321-21107	LOCK WASHER	2	2	
17	02142-06127	SCREW	6	6	
18	87221-80200	PROTECTOR, hinge female RH	1	1	
19	87621-80200	PROTECTOR, hinge female LH	1	1	
20	87229-80200	COVER, hinge RH	1	1	
21	87629-80200	COVER, hinge LH	1	1	
22	03241-05085	SCREW	4	4	
23	09403-06403	CLAMP, lock handle	2	2	
24	87291-80230	BAND, seat stopper	1	1	
25	87292-80230	HOLDER, band	1	1	
26	02142-05087	SCREW	1	1	
27	01517-08166	BOLT	2	2	
28	09387-19001	RING	AR	AR	

SJ413-4 E1

FIG.129

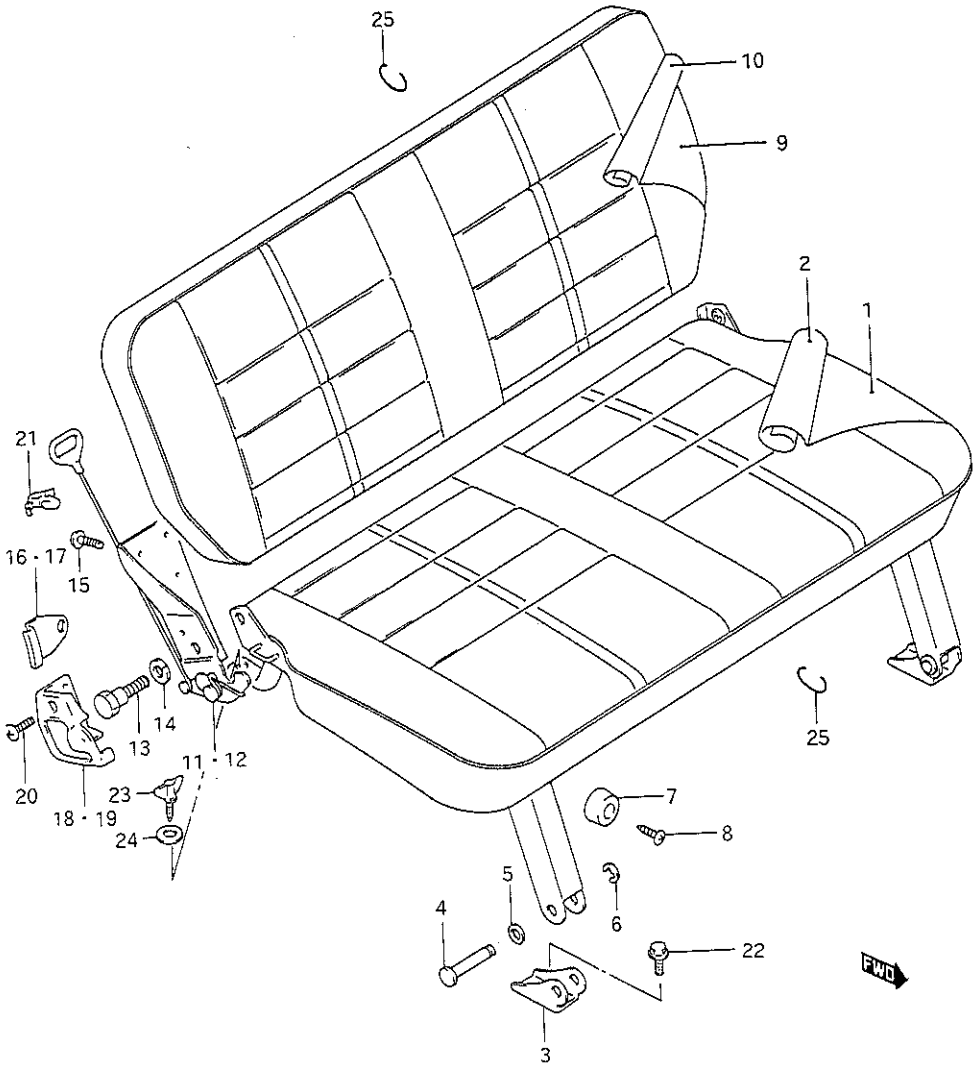

FIG.129(2-F-14) REAR SEAT (Q,V JA:E2,E15,E18,E22,E25,E34,E39,E54)

REF.NO.	PART NO.	DESCRIPTION	Q'TY Q	Q'TY V	REMARKS
1-1	87105-80830	CUSHION SUB ASSY, seat	1	1	E2,E25
1-2	87105-80840	CUSHION SUB ASSY, seat	1	1	E15,E18,E22,E34,E39,E54
2-1	87180-80570-2AL	COVER, cushion (Gray)	1	1	E2,E25
2-2	87180-80570-2AN	COVER, cushion (Brown)	1	1	E2,E25
2-3	87180-80590-2AL	COVER, cushion (Gray)	1	1	E15,E18,E22,E34,E39,E54
2-4	87180-80590-2AN	COVER, cushion (Brown)	1	1	E15,E18,E22,E34,E39,E54
3	87271-80280	MALE, seat hinge	2	2	
4	09208-06001	PIN	2	2	
5	09164-07001	WASHER	2	2	
6	08332-11046	E RING	2	2	
7	09320-06014	CUSHION	2	2	
8	03142-05209	SCREW	2	2	
9-1	87305-80830	BACK SUB ASSY, seat	1	1	E2,E25
9-2	87305-80840	BACK SUB ASSY, seat	1	1	E15,E18,E22,E34,E39,E54
10-1	87380-80550-2AL	COVER, back (Gray)	1	1	E2,E25
10-2	87380-80550-2AN	COVER, back (Brown)	1	1	E2,E25
10-3	87380-80590-2AL	COVER, back (Gray)	1	1	E15,E18,E22,E34,E39,E54
10-4	87380-80590-2AN	COVER, back (Brown)	1	1	E15,E18,E22,E34,E39,E54
11	87210-80200	LOCK, hinge RH	1	1	
12	87610-80200	LOCK, hinge LH	1	1	
13	09111-08044	BOLT	2	2	
14	08321-21107	LOCK WASHER	2	2	
15	02142-06127	SCREW	6	6	
16	87221-80200	PROTECTOR, hinge female RH	1	1	
17	87621-80200	PROTECTOR, hinge female LH	1	1	
18	87229-80200	COVER, hinge RH	1	1	
19	87629-80200	COVER, hinge LH	1	1	
20	03241-05085	SCREW	4	4	
21	09403-06403	CLAMP, lock handle	2	2	
22	01517-08166	BOLT	2	2	
23	09119-06017	BOLT	2	2	
24	09160-06020	WASHER	2	2	
25	09387-19001	RING	AR	AR	

SJ413-4 E1

FIG. 130

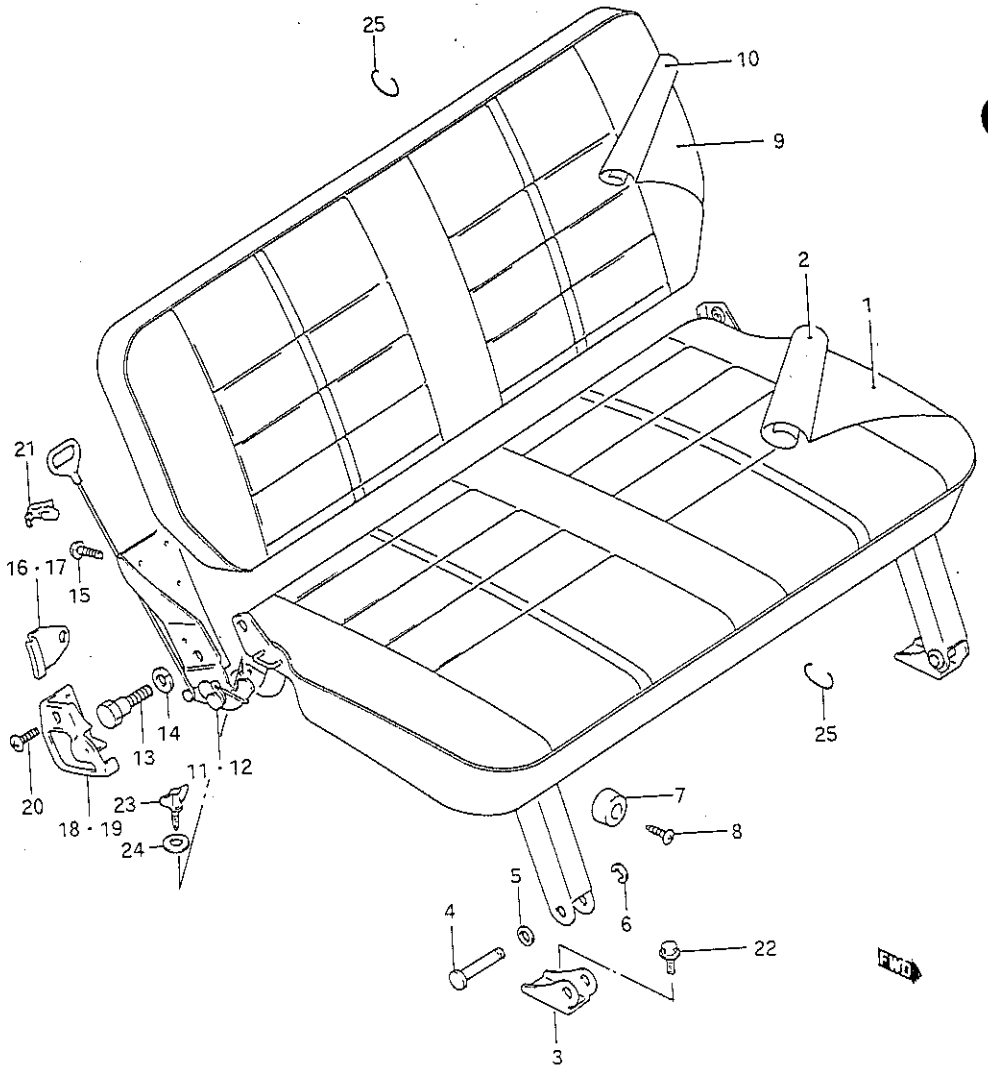

FIG.130(2-F-15) REAR SEAT (W JA:E2,E18,E22,E25,E54)

REF.NO.	PART NO.	DESCRIPTION	Q'TY W	REMARKS
1-1	87105-80850	CUSHION SUB ASSY, seat	1	E2,E25
1-2	87105-80860	CUSHION SUB ASSY, seat	1	E18,E22,E54
2-1	87180-80570-2AL	COVER, cushion (Gray)	1	E2,E25
2-2	87180-80570-2AN	COVER, cushion (Brown)	1	E2,E25
2-3	87180-80590-2AL	COVER, cushion (Gray)	1	E18,E22,E54
2-4	87180-80590-2AN	COVER, cushion (Brown)	1	E18,E22,E54
3	87271-80280	MALE, seat hinge	2	
4	09208-06001	PIN	2	
5	09164-07001	WASHER	2	
6	08332-11046	E RING	2	
7	09320-06014	CUSHION	2	
8	03142-05209	SCREW	2	
9-1	87305-80850	BACK SUB ASSY, seat	1	E2,E25
9-2	87305-80860	BACK SUB ASSY, seat	1	E18,E22,E54
10-1	87380-80550-2AL	COVER, back (Gray)	1	E2,E25
10-2	87380-80550-2AN	COVER, back (Brown)	1	E2,E25
10-3	87380-80590-2AL	COVER, back (Gray)	1	E18,E22,E54
10-4	87380-80590-2AN	COVER, back (Brown)	1	E18,E22,E54
11	87210-80200	LOCK, hinge RH	1	
12	87610-80200	LOCK, hinge LH	1	
13	09111-08044	BOLT	2	
14	08321-21107	LOCK WASHER	2	
15	02142-06127	SCREW	6	
16	87221-80200	PROTECTOR, hinge female RH	1	
17	87621-80200	PROTECTOR, hinge female LH	1	
18	87229-80200	COVER, hinge RH	1	
19	87629-80200	COVER, hinge LH	1	
20	03241-05085	SCREW	4	
21	09403-06403	CLAMP, lock handle	2	
22	01517-08166	BOLT	2	
23	09119-06017	BOLT	2	
24	09160-06020	WASHER	2	
25	09387-19001	RING	AR	

SJ413-4 E1

FIG.131

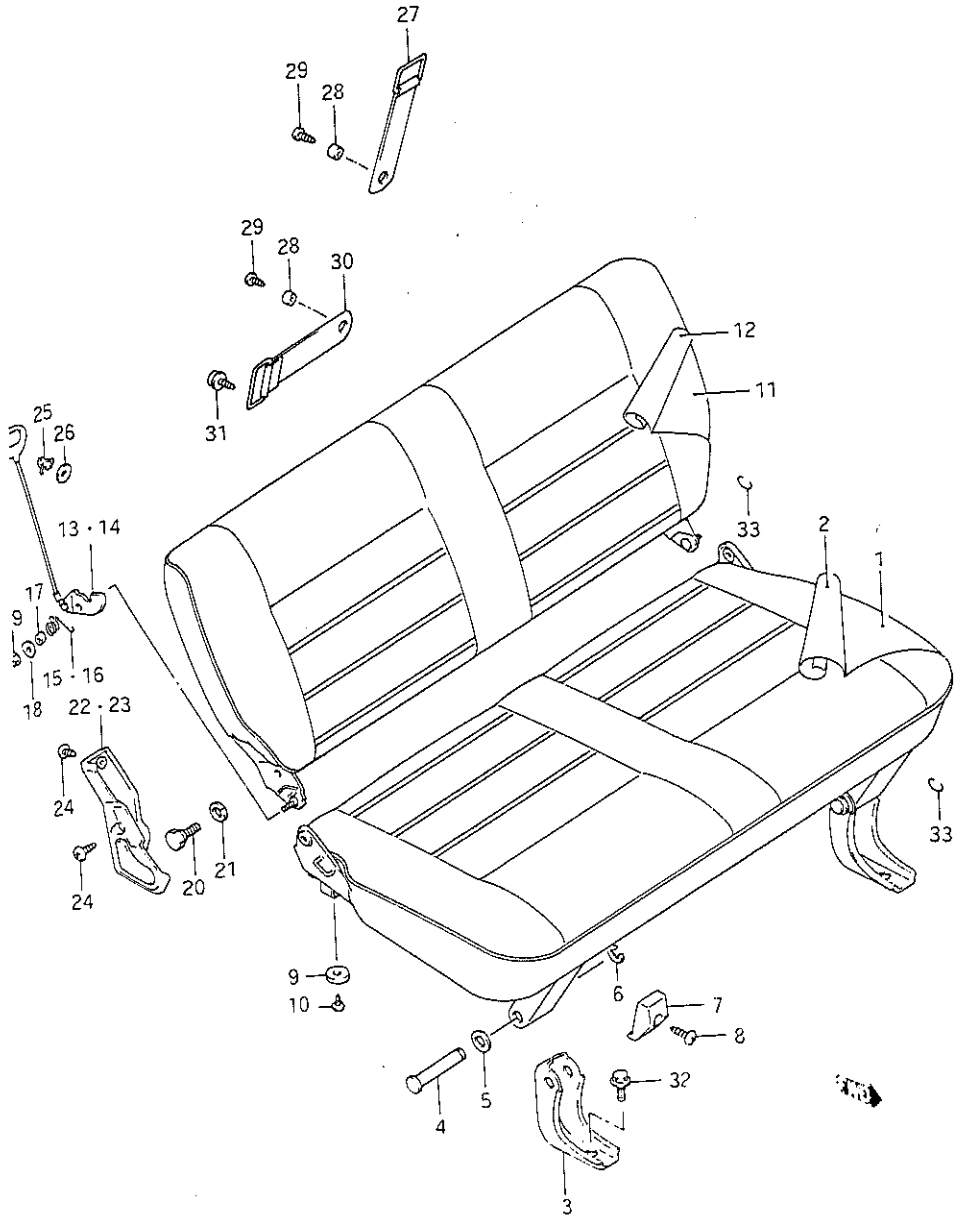

FIG.131(2-G- 2) REAR SEAT (Q,W:JX)

REF.NO.	PART NO.	DESCRIPTION	Q'TY Q/W	REMARKS
1	87105-83850	CUSHION SUB ASSY, seat	1	
2-1	87180-83000-2AJ	COVER, cushion (Gray)	1	Q
2-2	87180-83000-2AK	COVER, cushion (Brown)	1	Q
2-3	87180-83100-9YW	COVER, cushion (Gray)	1	W
2-4	87180-83100-9YZ	COVER, cushion (Brown)	1	W
3	87271-83000	MALE, seat hinge	2	
4	09208-06001	PIN	2	
5	09164-07001	WASHER	2	
6	08332-11046	E RING	2	
7	87195-83000	STOPPER	2	
8	03141-05206	SCREW	2	
9	09320-06015	CUSHION	2	
10	03242-05129	SCREW	2	
11	87305-83800	BACK SUB ASSY, seat	1	
12-1	87380-83000-2AJ	COVER, back (Gray)	1	Q
12-2	87380-83000-2AK	COVER, back (Brown)	1	Q
12-3	87380-83100-9YW	COVER, back (Gray)	1	W
12-4	87380-83100-9YZ	COVER, back (Brown)	1	W
13	83610-83920	LEVER, hinge RH	1	
14	83910-83920	LEVER, hinge LH	1	
15	83914-73062	SPRING, hinge RH	1	
16	83944-73062	SPRING, hinge LH	1	
17	87325-83000	COLLAR	2	
18	08322-21086	WASHER	2	
19	08310-22086	NUT	2	
20	09111-08044	BOLT	2	
21	08321-21107	SCREW	2	

Note:E2,E6,E15,E16,E17,E18,E22,E25,E34,E39,E53,E68 see next fig.

SJ413-4 E1

FIG.131

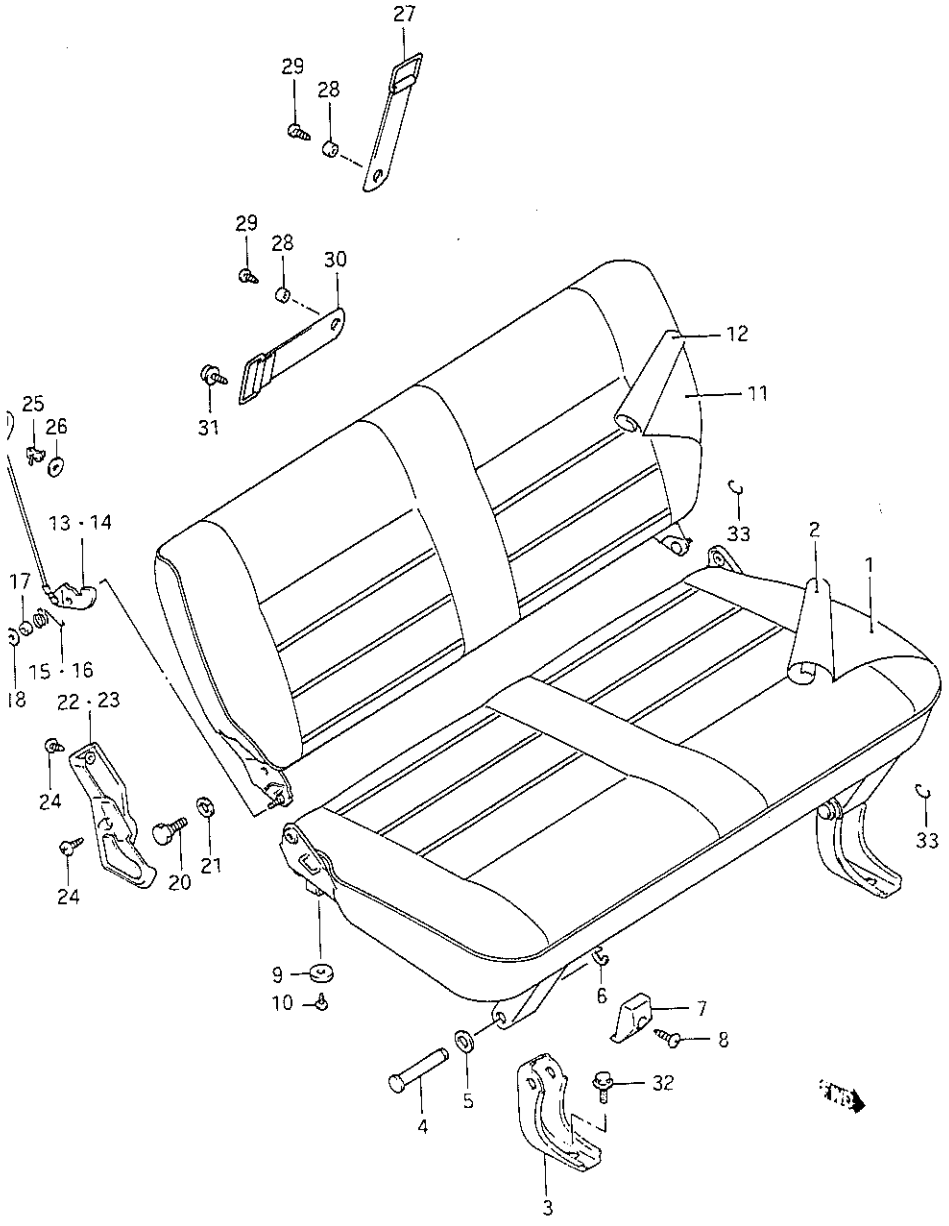

FIG.131(2-G- 3) REAR SEAT (Q,W:JX)

REF.NO.	PART NO.	DESCRIPTION	Q'TY Q/W	REMARKS
22	87229-83000	COVER, hinge RH	1	
23	87629-83000	COVER, hinge LH	1	
24	03241-05085	SCREW	6	
25	09403-06403	CLAMP, lock handle	2	
26	87328-83000	WASHER, handle clamp	2	
27	87293-83000	BAND, seat stopper	1	
28	87327-83000	COLLAR, stopper band	2	
29	03241-05145	SCREW	2	
30	87291-83000	BAND, seat stopper	1	
31	09410-00073	MALE, stopper band	1	
32	01517-08166	BOLT	2	
33	09387-19001	RING	AR	

SJ413-4 E1

FIG. 132

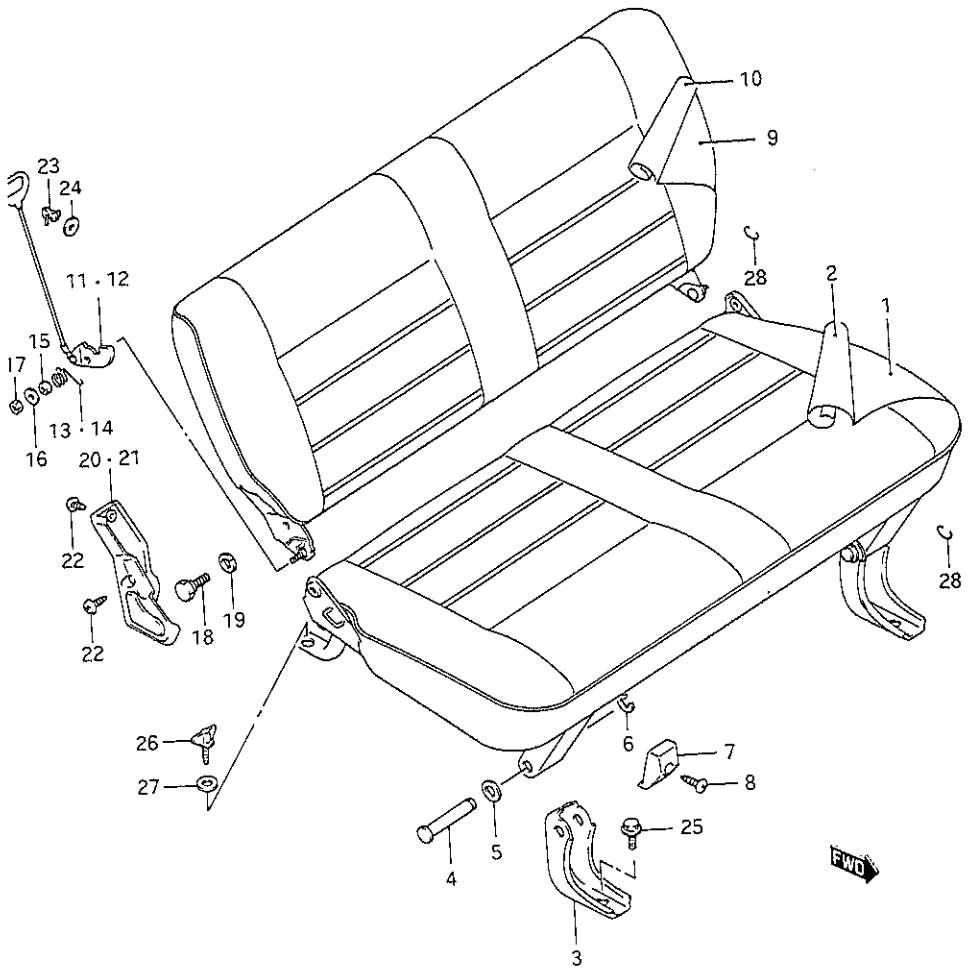

FIG.132(2-G- 4) REAR SEAT (JX:E2,E6,E15,E16,E17,E18,E22,E25,E34,E39,E53,E68)

REF.NO.	PART NO.	DESCRIPTION	Q'TY Q	Q'TY V	REMARKS
1	87105-83860	CUSHION SUB ASSY, seat	1	1	
2-1	87180-83000-2AJ	COVER, cushion (Gray)	1	-	
2-2	87180-83000-2AK	COVER, cushion (Brown)	1	-	
2-3	87180-83100-9YW	COVER, cushion (Gray)	-	1	
2-4	87180-83100-9YZ	COVER, cushion (Brown)	-	1	
3	87271-83000	MALE, seat hinge	2	2	
4	09208-06001	PIN	2	2	
5	09164-07001	WASHER	2	2	
6	08332-11046	E RING	2	2	
7	87195-83000	STOPPER	2	2	
8	03141-05206	SCREW	2	2	
9	87305-83800	BACK SUB ASSY seat	1	1	
10-1	87380-83000-2AJ	COVER, back (Gray)	1	-	
10-2	87380-83000-2AK	COVER, back (Brown)	1	-	
10-3	87380-83100-9YW	COVER, back (Gray)	-	1	
10-4	87380-83100-9YZ	COVER, back (Brown)	-	1	
11	83610-83920	LEVER, hinge RH	1	1	
12	83910-83920	LEVER, hinge LH	1	1	
13	83914-73062	SPRING, hinge RH	1	1	
14	83944-73062	SPRING, hinge LH	1	1	
15	87325-83000	COLLAR	2	2	
16	08322-21086	WASHER	2	2	
17	08310-22086	NUT	2	2	
18	09111-08044	BOLT	2	2	
19	08321-21107	SCREW	2	2	
20	87229-83000	COVER, hinge RH	1	1	
21	87629-83000	COVER, hinge LH	1	1	
22	03241-05085	SCREW	6	6	
23	09403-06403	CLAMP, lock handle	2	2	
24	87328-83000	WASHER, handle clamp	2	2	
25	01517-08166	BOLT	2	2	
26	09119-06017	BOLT	2	2	
27	09160-06020	WASHER	2	2	
28	09387-19001	RING	AR	AR	

SJ413-4 E1

SJ413-4 E1

FIG. 133

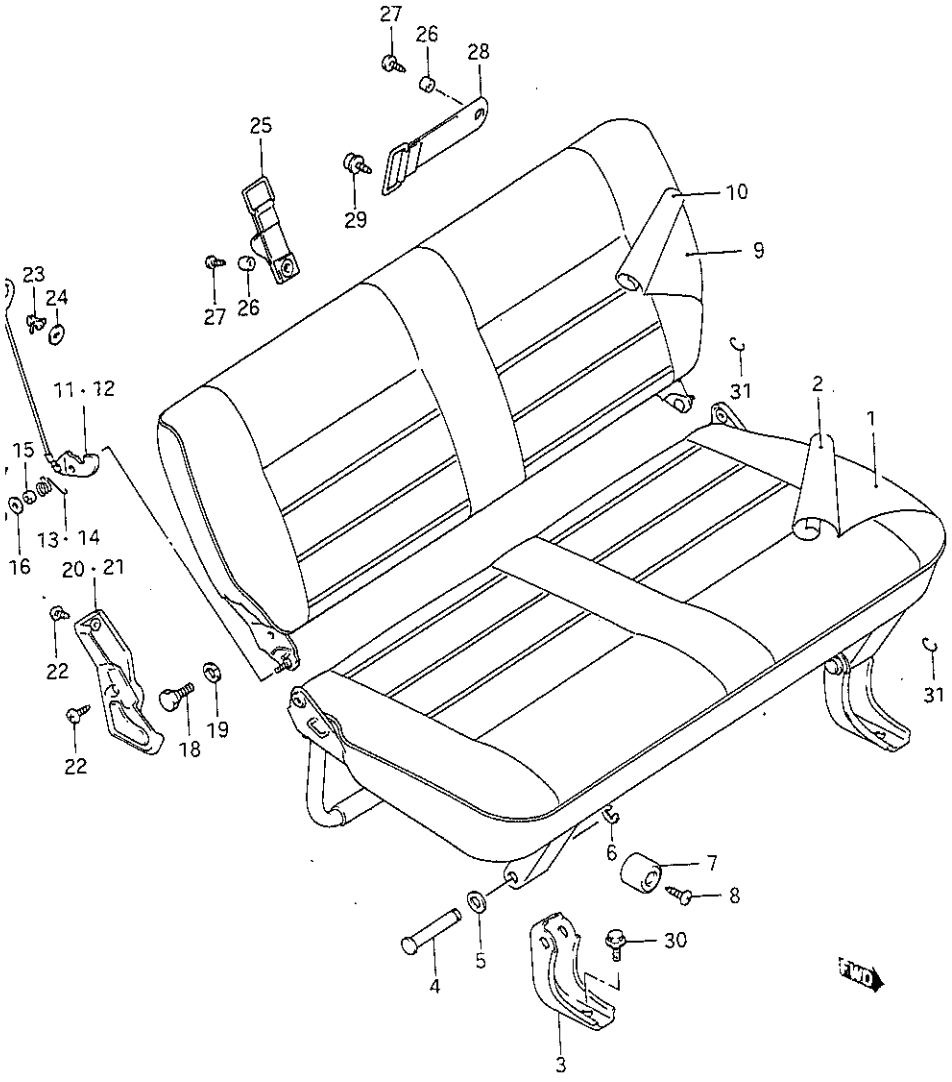

FIG.133(2-G- 5) REAR SEAT (HIGH ROOF)

REF.NO.	PART NO.	DESCRIPTION	Q'TY V	REMARKS
1	87105-83870	CUSHION SUB ASSY, seat	1	
2-1	87180-83170-9YW	COVER, cushion (Gray)	1	
2-2	87180-83170-9YZ	COVER, cushion (Brown)	1	
3	87271-83000	MALE, seat hinge	2	
4	09208-06001	PIN	2	
5	09164-07001	WASHER	2	
6	08332-11049	E RING	2	
7	09320-06014	CUSHION	2	
8	03142-05209	SCREW	2	
9	87305-83800	BACK SUB ASSY, seat	1	
10-1	87380-83100-9YW	COVER, back (Gray)	1	
10-2	87380-83100-9YZ	COVER, back (Brown)	1	
11	83610-83920	LEVER, hinge RH	1	
12	83910-83920	LEVER, hinge LH	1	
13	83914-73062	SPRING, hinge RH	1	
14	83944-73062	SPRING, hinge LH	1	
15	87325-83000	COLLAR	2	
16	08322-21086	WASHER	2	
17	08310-22086	NUT	2	
18	09111-08044	BOLT	2	
19	08321-21107	SCREW	2	
20	87229-83000	COVER, hinge RH	1	
21	87629-83000	COVER, hinge LH	1	
22	03241-05085	SCREW	6	
23	09403-06403	CLAMP, lock handle	2	
24	87328-83000	WASHER, handle clamp	2	
25	87293-83000	BAND, seat stopper	1	
26	87327-83000	COLLAR, stopper band	2	
27	03241-05145	SCREW	2	
28	87291-83000	BAND, seat stopper	1	
29	09410-00073	MALE, stopper band	1	
30	01517-08166	BOLT	2	
31	09387-19001	RING	AR	

Note : E15,E16,E17,E18,E22,E25,E34,E39,E53 see next fig.

SJ413-4 E1

FIG. 134

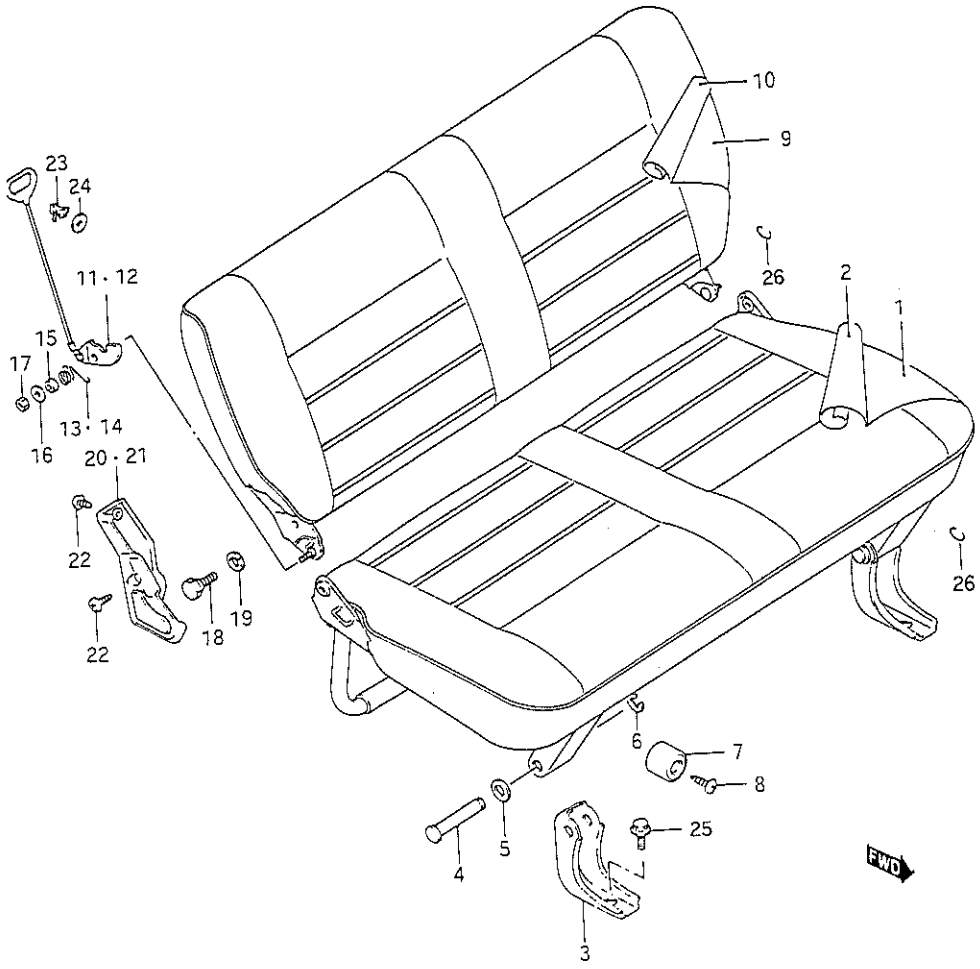

FIG.134(2-G- 6) REAR SEAT (HIGH ROOF:E15,E16,E17,E18,E22,E25,E34,E39,E53)

REF.NO.	PART NO.	DESCRIPTION	Q'TY V	REMARKS
1	87105-81800	CUSHION SUB ASSY, seat	1	
2-1	87180-83180-9YW	COVER, cushion (Gray)	1	
2-2	87180-83180-9YZ	COVER, cushion (Brown)	1	
3	87271-83000	MALE, seat hinge	2	
4	09208-06001	PIN	2	
5	09164-07001	WASHER	2	
6	08332-11049	E RING	2	
7	09320-06014	CUSHION	2	
8	03142-05209	SCREW	2	
9	87305-83800	BACK SUB ASSY, seat	1	
10-1	87380-83100-9YW	COVER, back (Gray)	1	
10-2	87380-83100-9YZ	COVER, back (Brown)	1	
11	83610-83920	LEVER, hinge RH	1	
12	83910-83920	LEVER, hinge LH	1	
13	83914-73062	SPRING, hinge RH	1	
14	83944-73062	SPRING, hinge LH	1	
15	87325-83000	COLLAR	2	
16	08322-21086	WASHER	2	
17	08310-22086	NUT	2	
18	09111-08044	BOLT	2	
19	08321-21107	SCREW	2	
20	87229-83000	COVER, hinge RH	1	
21	87629-83000	COVER, hinge LH	1	
22	03241-05085	SCREW	6	
23	09403-06403	CLAMP, lock handle	2	
24	87328-83000	WASHER, handle clamp	2	
25	01517-08166	BOLT	2	
26	09119-06017	BOLT	2	
27	09160-06020	WASHER	2	
28	09387-19001	RING	AR	

SJ413-4 E1

FIG. 135

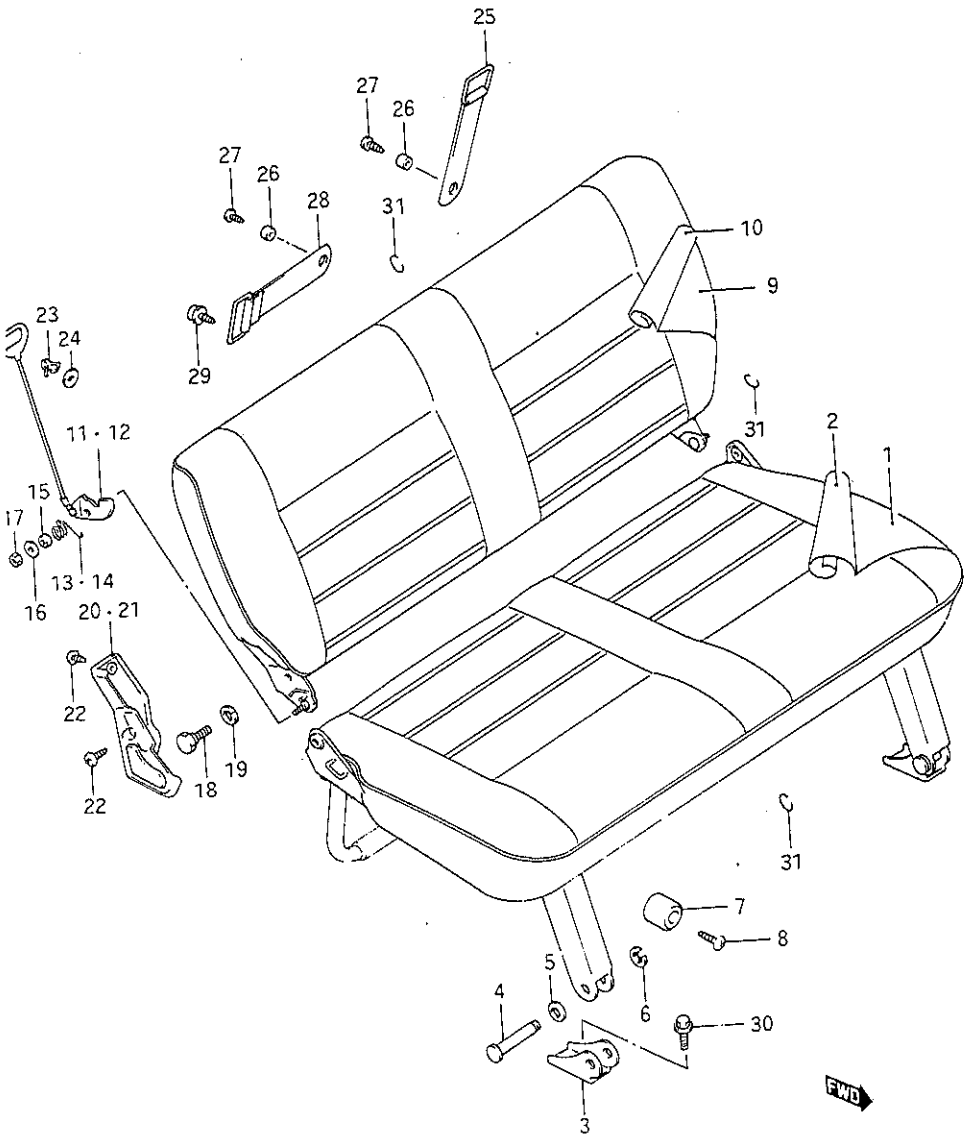

FIG.135(2-G- 7) REAR SEAT (W:JX)

REF.NO.	PART NO.	DESCRIPTION	Q'TY W	REMARKS
1	87105-83880	CUSHION SUB ASSY, seat	1	
2-1	87180-83430-2AJ	COVER, cushion (Gray)	1	
2-2	87180-83430-2AK	COVER, cushion (Brown)	1	
2-3	87180-83170-9YW	COVER, cushion (Gray)	1	W/resin top
2-4	87180-83170-9YZ	COVER, cushion (Brown)	1	W/resin top
3	87271-80280	MALE, seat hinge	2	
4	09208-06001	PIN	2	
5	09164-07001	WASHER	2	
6	08332-11046	E RING	2	
7	09320-06014	CUSHION	2	
8	03142-05209	SCREW	2	
9	87305-83800	BACK SUB ASSY, seat	1	
10-1	87380-83000-2AJ	COVER, back (Gray)	1	
10-2	87380-83000-2AK	COVER, back (Brown)	1	
10-3	87380-83100-9YW	COVER, back (Gray)	1	W/resin top
10-4	87380-83100-9YZ	COVER, back (Brown)	1	W/resin top
11	83610-83920	LEVER, hinge RH	1	
12	83910-83920	LEVER, hinge LH	1	
13	83914-73062	SPRING, hinge RH	1	
14	83944-73062	SPRING, hinge LH	1	
15	87325-83000	COLLAR	2	
16	08322-21086	WASHER	2	
17	08310-22086	NUT	2	
18	09111-08044	BOLT	2	
19	08321-21107	SCREW	2	
20	87229-83000	COVER, hinge RH	1	
21	87629-83000	COVER, hinge LH	1	
22	03241-05085	SCREW	6	
23	09403-06403	CLAMP, lock handle	2	
24	87328-83000	WASHER, handle clamp	2	
25	87293-83430	BAND, seat stopper	1	
26	87327-83000	COLLAR, stopper band	2	
27	03241-05145	SCREW	2	
28	87291-83170	BAND, seat stopper	1	
29	09410-00073	MALE, stopper band	1	
30	01517-08166	BOLT	2	
31	09387-19001	RING	AR	

SJ413-4 E1

FIG. 136

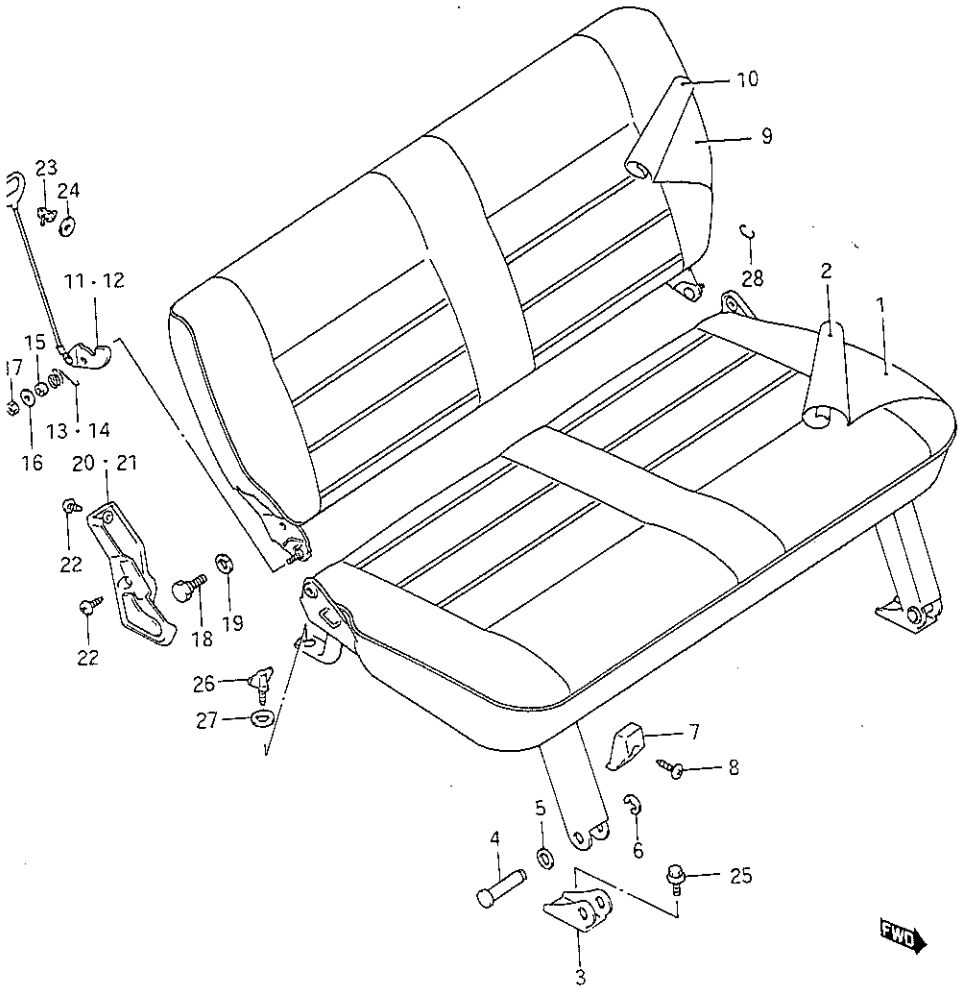

FIG.136(2-G- 8) REAR SEAT (W.JX:E2,E6,E15,E16,E17,E18,E22,E25,E34,E53)

REF.NO.	PART NO.	DESCRIPTION	Q'TY W	REMARKS
1	87105-83890	CUSHION SUB ASSY, seat	1	
2-1	87180-83420-2AJ	COVER, cushion (Gray)	1	
2-2	87180-83420-2AK	COVER, cushion (Brown)	1	
2-3	87180-83440-9YW	COVER, cushion (Gray)	1	W/resin top:E15,E17, E22,E25
2-4	87180-83440-9YZ	COVER, cushion (Brown)	1	W/resin top:E15,E17, E22,E25
3	87271-80280	MALE, seat hinge	2	
4	09208-06001	PIN	2	
5	09164-07001	WASHER	2	
6	08332-11046	E RING	2	
7	87195-83000	STOPPER	2	
8	03141-05206	SCREW	2	
9	87305-83800	BACK SUB ASSY, seat	1	
10-1	87380-83000-2AJ	COVER, back (Gray)	1	
10-2	87380-83000-2AK	COVER, back (Brown)	1	
10-3	87380-83100-9YW	COVER, back (Gray)	1	W/resin top
10-4	87380-83100-9YZ	COVER, back (Brown)	1	W/resin top
11	83610-83920	LEVER, hinge RH	1	
12	83910-83920	LEVER, hinge LH	1	
13	83914-73062	SPRING, hinge RH	1	
14	83944-73062	SPRING, hinge LH	1	
15	87325-83000	COLLAR	2	
16	08322-21086	WASHER	2	
17	08310-22086	NUT	2	
18	09111-08044	BOLT	2	
19	08321-21107	SCREW	2	
20	87229-83000	COVER, hinge RH	1	
21	87629-83000	COVER, hinge LH	1	
22	03241-05085	SCREW	6	
23	09403-06403	CLAMP, lock handle	2	
24	87328-83000	WASHER, handle clamp	2	
25	01517-08166	BOLT	2	
26	09119-06017	BOLT	2	
27	09160-06020	WASHER	2	
28	09387-19001	RING	AR	

FIG. 137

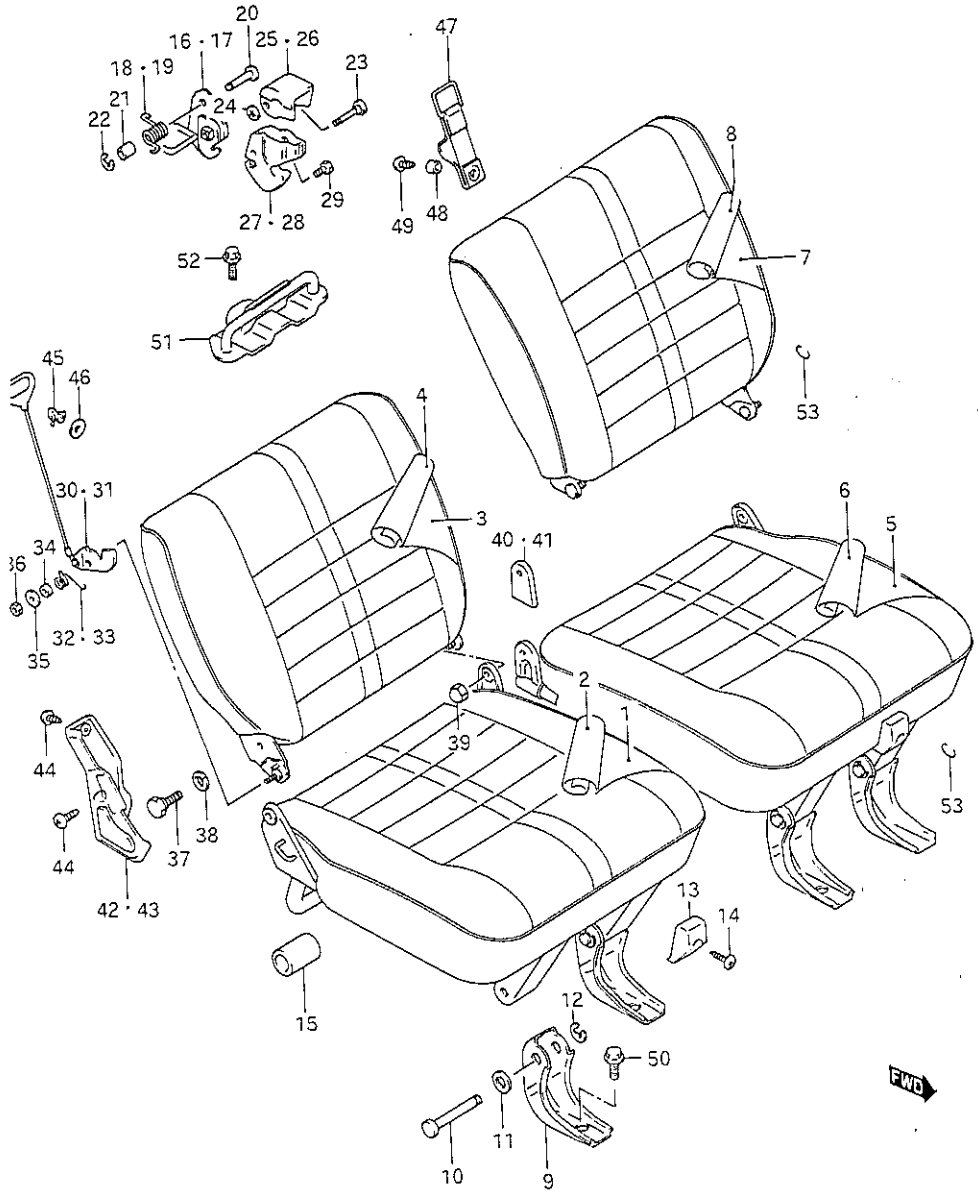

FIG.137(2-G- 9) REAR SEAT (JX:SEPARATE TYPE)

REF.NO.	PART NO.	DESCRIPTION	Q'TY Q	Q'TY Y	REMARKS
1-1	87105-83810	CUSHION SUB ASSY, RH	1	1	
1-2	87105-83840	CUSHION SUB ASSY, RH	-	1	W/high roof
2-1	87180-83300-2AJ	COVER, cushion RH (Gray)	1	-	
2-2	87180-83300-2AK	COVER, cushion RH (Brown)	1	-	
2-3	87180-83310-9YW	COVER, cushion RH (Gray)	-	1	
2-4	87180-83310-9YZ	COVER, cushion RH (Brown)	-	1	
2-5	87180-83320-9YW	COVER, cushion RH (Gray)	-	1	W/high roof
2-6	87180-83320-9YZ	COVER, cushion RH (Brown)	-	1	W/high roof
3	87305-83810	BACK SUB ASSY, RH	1	1	
4-1	87380-83300-2AJ	COVER, back RH (Gray)	1	-	
4-2	87380-83300-2AK	COVER, back RH (Brown)	1	-	
4-3	87380-83310-9YW	COVER, back RH (Gray)	-	1	
4-4	87380-83310-9YZ	COVER, back RH (Brown)	-	1	
5-1	87106-83810	CUSHION SUB ASSY, LH	1	1	
5-2	87106-83820	CUSHION SUB ASSY, LH	-	1	W/high roof
6-1	87580-83300-2AJ	COVER, cushion LH (Gray)	1	-	
6-2	87580-83300-2AK	COVER, cushion LH (Brown)	1	-	
6-3	87580-83310-9YW	COVER, cushion LH (Gray)	-	1	
6-4	87580-83310-9YZ	COVER, cushion LH (Brown)	-	1	
6-5	87580-83320-9YW	COVER, cushion LH (Gray)	-	1	W/high roof
6-6	87580-83320-9YZ	COVER, cushion LH (Brown)	-	1	W/high roof
7	87306-83810	BACK SUB ASSY, LH	1	1	
8-1	87780-83300-2AJ	COVER, back LH (Gray)	1	-	
8-2	87780-83300-2AK	COVER, back LH (Brown)	1	-	
8-3	87780-83310-9YW	COVER, back LH (Gray)	-	1	
8-4	87780-83310-9YZ	COVER, back LH (Brown)	-	1	
9	87271-83000	MALE, seat hinge	4	4	
10	09208-06001	PIN	4	4	
11	09164-07001	WASHER	4	4	
12	08352-11046	E RING	4	4	
13-1	87195-83000	CUSHION, stopper	2	2	
13-2	09320-06014	CUSHION, stopper	-	2	W/high roof
14	05141-05206	SCREW	2	2	
15	84354-79500	CUSHION, rear leg	4	4	
16	87250-83500	STOPPER, seat lock RH	1	1	
17	87650-83500	STOPPER, seat lock LH	1	1	

SJ413-4 E1

FIG. 137

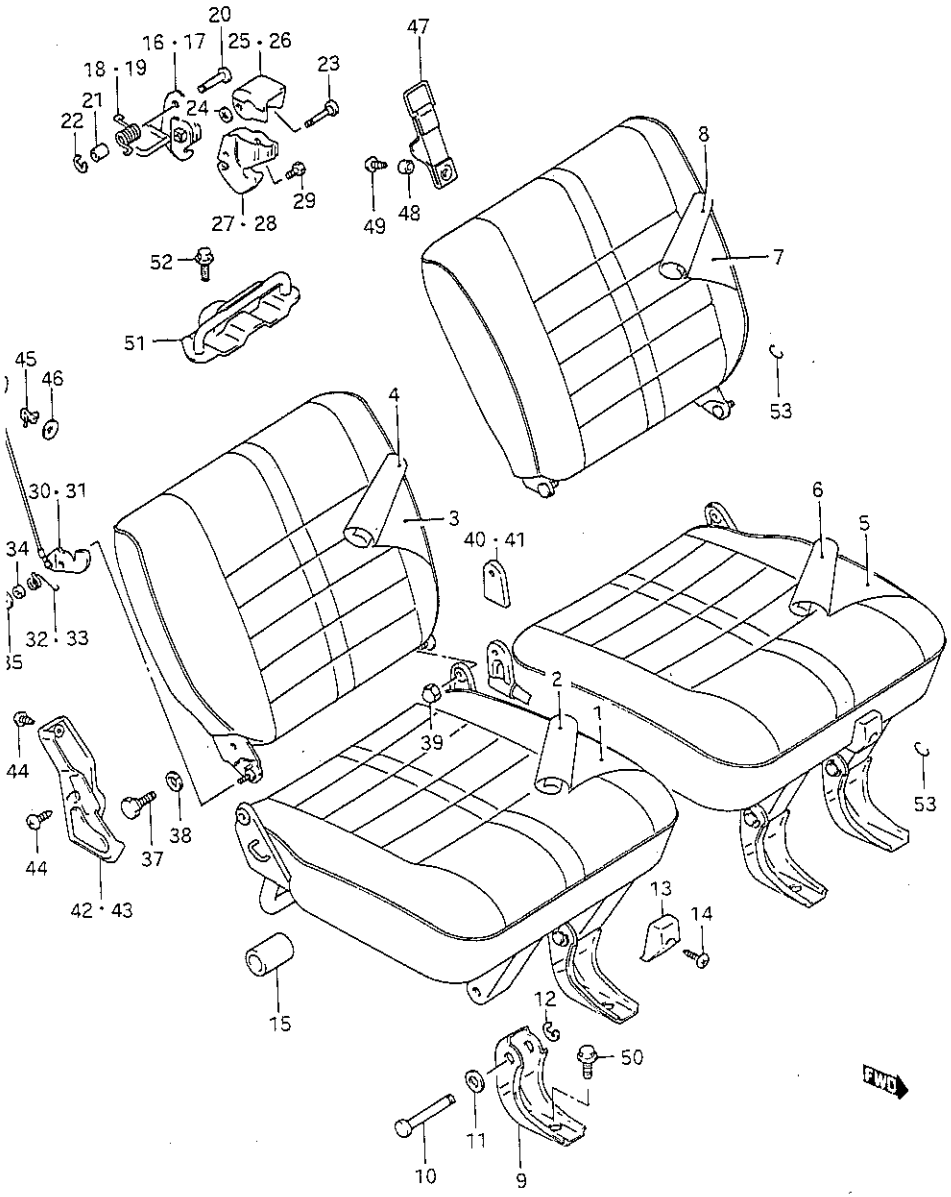

FIG.137(2-G-10) REAR SEAT (JX:SEPARATE TYPE)

REF.NO.	PART NO.	DESCRIPTION	Q'TY Q	Q'TY V	REMARKS
18-1	87255-83300	SPRING, RH	1	1	
18-2	87255-83320	SPRING, RH	-	1	W/high roof
19-1	87655-83300	SPRING, LH	1	1	
19-2	87655-83320	SPRING, LH	-	1	W/high roof
20	87256-83300	PIN	2	2	
21	87257-83300	COLLAR	2	2	
22	08332-11088	E RING	2	2	
23	87258-83300	STOPPER, seat lock	2	2	
24	09148-06005	NUT	2	2	
25-1	87291-83300-281	COVER, seat bracket RH	1	1	
25-2	87291-83320-281	COVER, seat bracket RH	-	1	W/high roof
26-1	87691-83300-281	COVER, seat bracket LH	1	1	
26-2	87691-83320-281	COVER, seat bracket LH	-	1	W/high roof
27	87292-83300-281	COVER, seat lock RH	1	1	
28	87692-83300-281	COVER, seat lock LH	1	1	
29	03212-05165	SCREW	2	2	
30	83610-83920	LEVER, hinge RH	1	1	
31	83910-83920	LEVER, hinge LH	1	1	
32	83914-73062	SPRING, hinge RH	1	1	
33	83944-73062	SPRING, hinge LH	1	1	
34	87325-83000	COLLAR	2	2	
35	08322-21086	WASHER	2	2	
36	08310-22086	NUT	2	2	
37	87271-85500	BOLT, hinge	2	2	
38	08321-21107	WASHER	2	2	
39	08313-11085	NUT	2	2	
40	87228-83300	COVER, hinge inner RH	1	1	
41	87628-83300	COVER, hinge inner LH	1	1	
42	87229-83000	COVER, hinge outer RH	1	1	
43	87629-83000	COVER, hinge outer LH	1	1	
44	03241-05085	SCREW	6	6	
45	09403-06403	CLAMP, lock handle	2	2	
46	87528-83000	WASHER	2	2	

SJ413-4 E1

FIG. 137

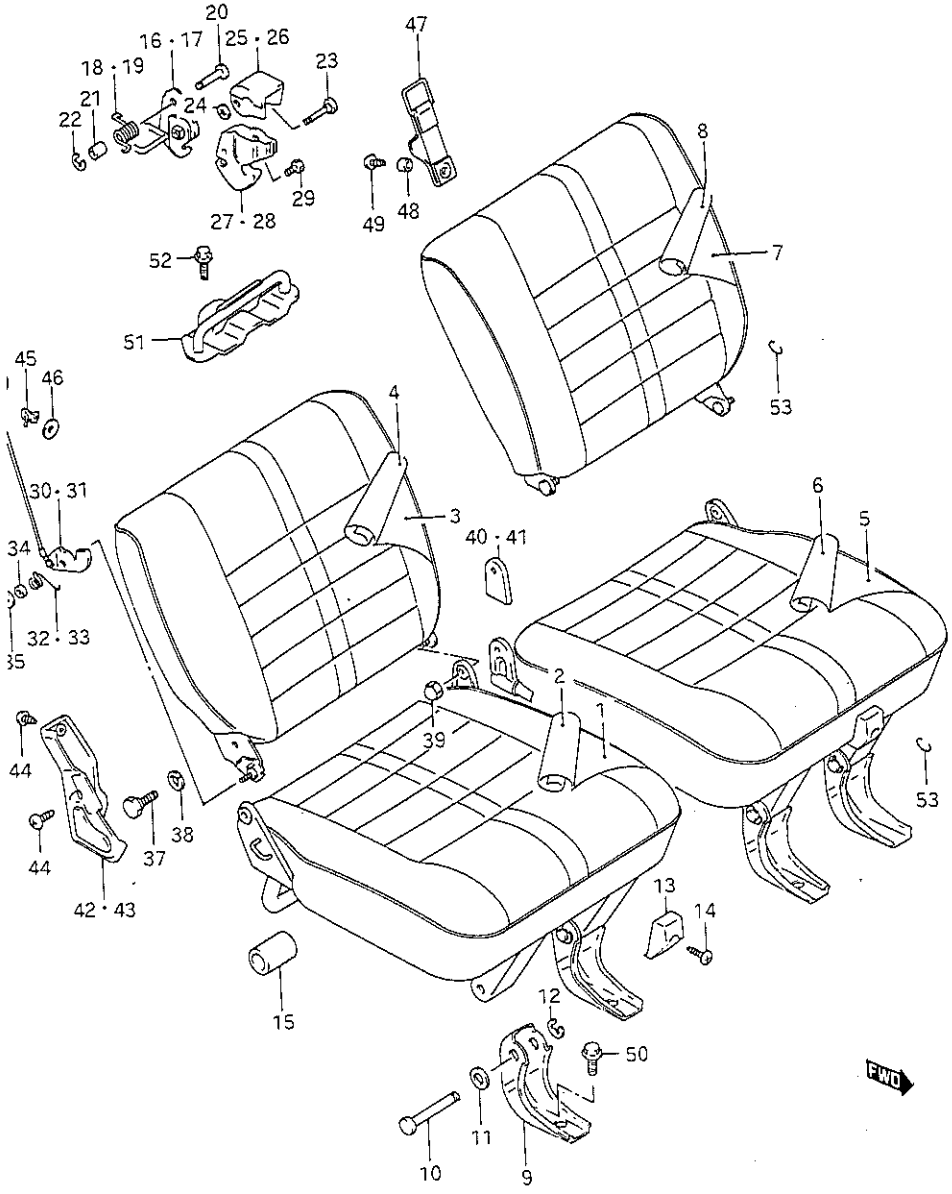

FIG.137(2-G-11) REAR SEAT (JX:SEPARATE TYPE)

REF.NO.	PART NO.	DESCRIPTION	Q'TY Q	Q'TY V	REMARKS
47	87293-83000	BAND, seat stopper	2	2	
48	87327-83000	COLLAR, stopper band	2	2	
49	03242-05165	SCREW	2	2	
50	01517-08166	BOLT	4	4	
51	87830-80270	STRIKER, seat belt stopper	1	1	
52	01517-10256	BOLT	2	2	
53	09387-19001	RING	AR	AR	

FIG. 138

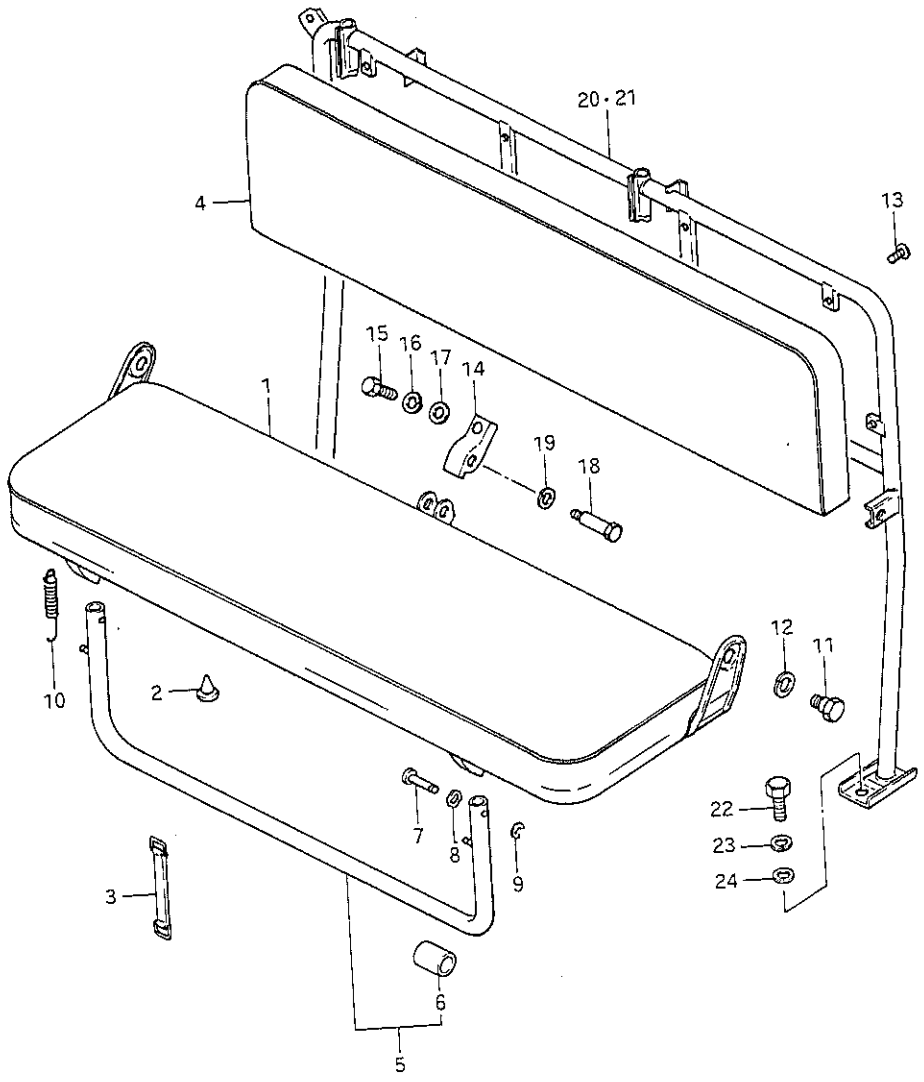

FIG.138(2-G-12) REAR SEAT (W:F)

REF.NO.	PART NO.	DESCRIPTION	Q'TY W	REMARKS
1-1	87101-80300-2AL	CUSHION ASSY, seat (Gray)	2	
1-2	87101-80300-2AN	CUSHION ASSY, seat (Brown)	2	
1-3	87101-80400-2AM	CUSHION ASSY, seat (Gray)	2	E43
1-4	87101-80400-2AP	CUSHION ASSY, seat (Brown)	2	E43
2	09321-06016	.STOPPER, front leg	4	
3	87191-80300	.BAND, cushion stopper	2	
4-1	87301-80301-2AL	BACK ASSY, seat (Gray)	2	
4-2	87301-80301-2AN	BACK ASSY, seat (Brown)	2	
4-3	87301-80401-2AM	BACK ASSY, seat (Gray)	2	E43
4-4	87301-80401-2AP	BACK ASSY, seat (Brown)	2	E43
5	87250-80300	LEG, cushion front	2	
6	87252-80300	.CUSHION	4	
7	09208-06003	PIN	4	
8	09164-07001	WASHER	4	
9	08352-11046	E RING	4	
10	09443-11008	SPRING	4	
11	09111-08045	BOLT	4	
12	08321-21107	LOCK WASHER	4	
13	02142-05107	SCREW	16	
14	87851-80300	MALE, cushion hinge center	2	
15	01107-08167	BOLT	2	
16	08321-21088	LOCK WASHER	2	
17	08322-11088	WASHER	2	
18	09111-06009	BOLT	2	
19	08322-11088	WASHER	2	
20	87850-80300	FRAME, back stay RH	1	
21	87950-80300	FRAME, back stay LH	1	
22	01107-06166	BOLT	12	
23	08321-21066	LOCK WASHER	12	
24	09160-06019	WASHER (6.5x18x1.6)	12	

SJ413-4 E1

FIG. 139

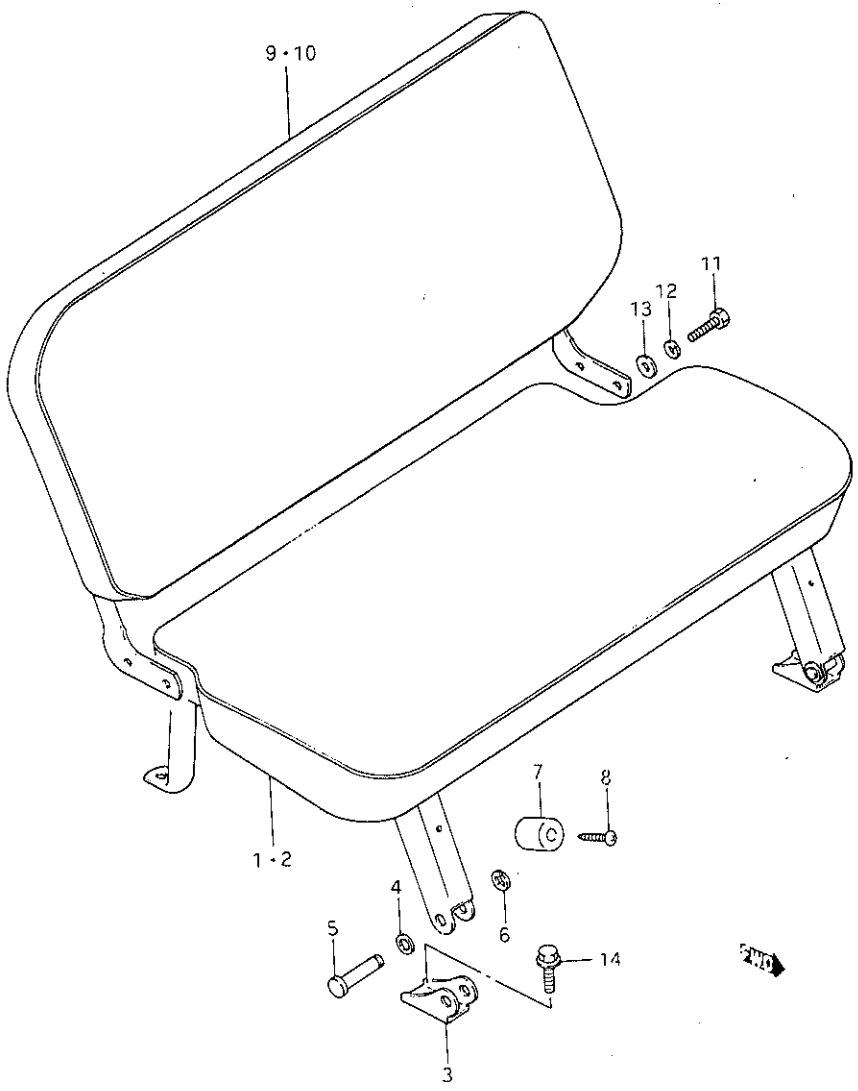

FIG.139(2-G-13) 2ND REAR SEAT (W JX RESIN TOP)

REF.NO.	PART NO.	DESCRIPTION	Q'TY W	REMARKS
1-1	87102-83050-9YW	CUSHION ASSY, seat (Gray)	1	LHD
1-2	87102-83050-9YZ	CUSHION ASSY, seat (Brown)	1	LHD
2-1	87101-83050-9YW	CUSHION ASSY, seat (Gray)	1	RHD
2-2	87101-83050-9YZ	CUSHION ASSY, seat (Brown)	1	RHD
3	87271-80280	.MALE, seat hinge	2	
4	09164-07001	.WASHER	2	
5	09208-06001	.PIN	2	
6	08352-11046	.E RING	2	
7	09320-06001	.CUSHION	1	
8	03241-05125	.SCREW	1	
9-1	87302-83050-9YW	BACK ASSY, seat (Gray)	1	LHD
9-2	87302-83050-9YZ	BACK ASSY, seat (Brown)	1	LHD
10-1	87301-83050-9YW	BACK ASSY, seat (Gray)	1	RHD
10-2	87301-83050-9YZ	BACK ASSY, seat (Brown)	1	RHD
11	01107-08205	BOLT	4	
12	08321-21086	LOCK WASHER	4	
13	08322-21086	WASHER	4	
14	01517-08166	BOLT	3	

FIG. 140

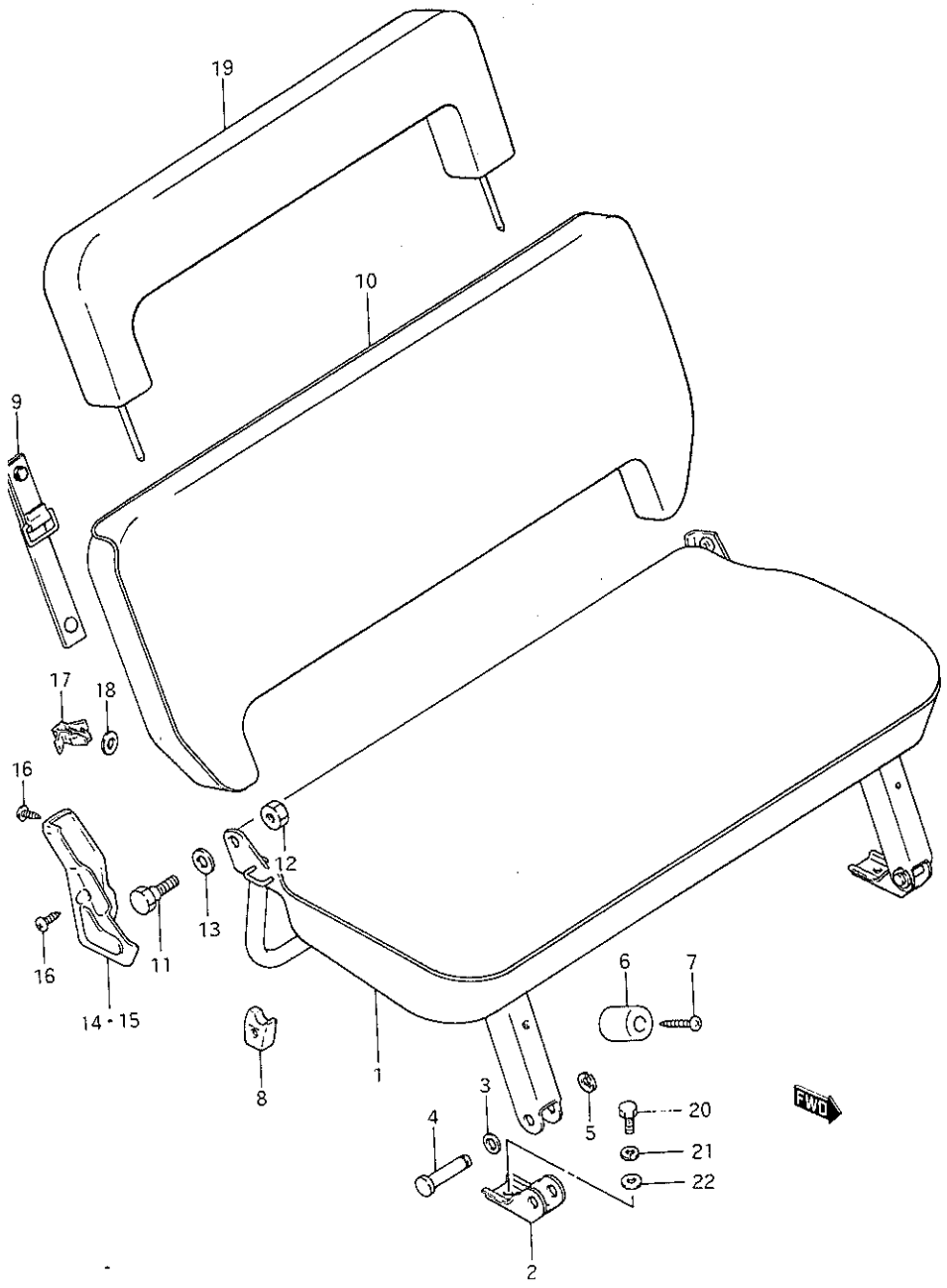

FIG.140(2-G-14) 3RD REAR SEAT (W:RESIN TOP)

REF.NO.	PART NO.	DESCRIPTION	Q'TY W	REMARKS
1-1	88101-83050-2JM	CUSHION ASSY, seat (Gray)	1	
1-2	88101-83050-2JN	CUSHION ASSY, seat (Brown)	1	
2	88271-83050	.MALE, seat hinge	2	
3	09164-07001	.WASHER	2	
4	09208-06001	.PIN	4	
5	08332-11046	.E RING	2	
6	09320-06014	.CUSHION	2	
7	03142-05209	.SCREW	2	
8	87295-80470	.CUSHION	2	
9	88291-83050	.BAND	1	
10-1	88301-83050-2JM	BACK ASSY, seat (Gray)	1	
10-2	88301-83050-2JN	BACK ASSY, seat (Brown)	1	
11	87271-85500	BOLT	2	
12	08310-22086	NUT	2	
13	08322-21086	WASHER	2	
14	88229-83050-281	COVER, back hinge RH	1	
15	88629-83050-281	COVER, back hinge LH	1	
16	03241-05085	SCREW	4	
17	09403-06403	CLAMP, lock handle	2	
18	87328-83000	WASHER	2	
19-1	88880-83050-2JP	SUPPORT ASSY, seat head (Black)	1	
19-2	88880-83050-2JR	SUPPORT ASSY, seat head (Brown)	1	
20	01107-08206	BOLT	2	
21	08321-21086	LOCK WASHER	2	
22	08322-11086	WASHER	2	

SJ413-4 E1

FIG. 141

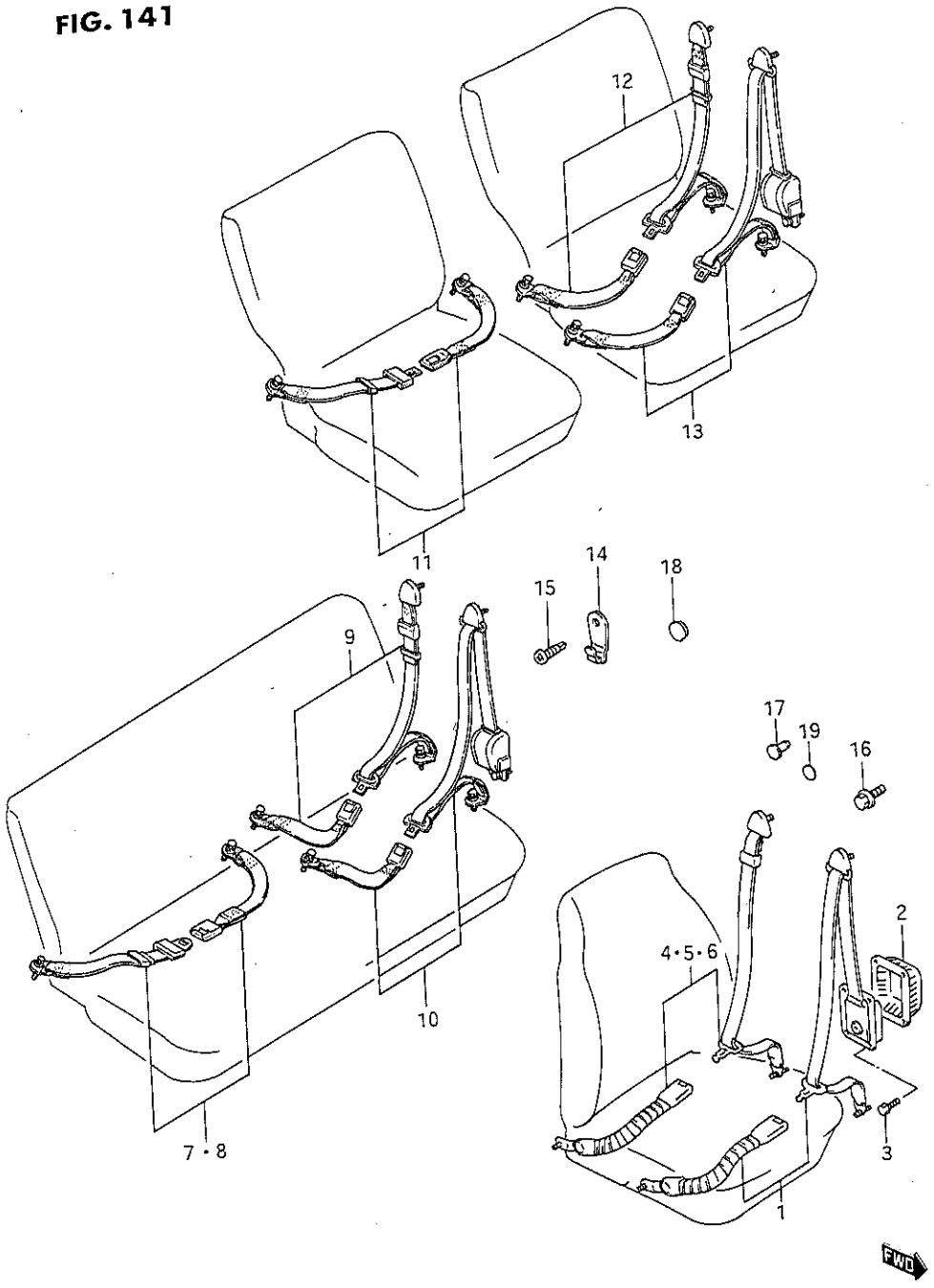

FIG.141(2-G-15) SEAT BELT

REF.NO.	PART NO.	DESCRIPTION	Q'TY Q/W	Q'TY V	REMARKS
1-1	84901-70A40-382	BELT ASSY, front (Black)	2	2	E.I..R
1-2	84901-70A40-5DD	BELT ASSY, front (Brown)	2	2	E.I..R
2	84924-80130	COVER, front seat belt	2	2	
3	02142-06125	SCREW	8	8	
4-1	84901-70A60-382	BELT ASSY, front (Black)	2	2	3 point
4-2	84901-70A60-5DD	BELT ASSY, front (Brown)	2	2	3 point
5-1	84901-70A70-382	BELT ASSY, front RH (Black)	1	1	E43,3 point,W/warning
5-2	84901-70A70-5DD	BELT ASSY, front RH (Brown)	1	1	E43,3 point,W/warning
6-1	84902-70A70-382	BELT ASSY, front LH (Black)	1	1	E43,3 point,W/warning
6-2	84902-70A70-5DD	BELT ASSY, front LH (Brown)	1	1	E43,3 point,W/warning
7-1	84904-83050-382	BELT ASSY, rear (Black)	2	2	Q,V,2 point
7-2	84904-83050-5DD	BELT ASSY, rear (Brown)	2	2	Q,V,2 point
8-1	84904-80190-382	BELT ASSY, rear (Black)	2	-	W,2 point
8-2	84904-80190-5DD	BELT ASSY, rear (Brown)	2	-	W,2 point
9-1	84904-83020-382	BELT ASSY, rear (Black)	-	2	3 point
9-2	84904-83020-5DD	BELT ASSY, rear (Brown)	-	2	3 point
10-1	84904-83030-382	BELT ASSY, rear (Black)	-	2	E.I..R
10-2	84904-83030-5DD	BELT ASSY, rear (Brown)	-	2	E.I..R
11-1	84904-83040-382	BELT ASSY, rear (Black)	2	2	2 point,separate seat
11-2	84904-83040-5DD	BELT ASSY, rear (Brown)	2	2	2 point,separate seat
12-1	84904-83060-382	BELT ASSY, rear (Black)	-	2	3 point,separate seat
12-2	84904-83060-5DD	BELT ASSY, rear (Brown)	-	2	3 point,separate seat
13-1	84904-83070-382	BELT ASSY, rear (Black)	-	2	E.I..R,separate seat
13-2	84904-83070-5DD	BELT ASSY, rear (Brown)	-	2	E.I..R,separate seat
14	84961-83000	HANGER, rear seat belt	2	2	2 point
15	09132-05031	SCREW	2	2	2 point
16	09103-12020	BOLT	2	2	N/front seat belt
17	09250-10017	PLUG	4	4	N/seat belt
18	09250-16006	PLUG	4	4	N/seat belt
19	67627-70000	SEAL, shoulder	6	6	N/seat belt

SJ413-4 E1

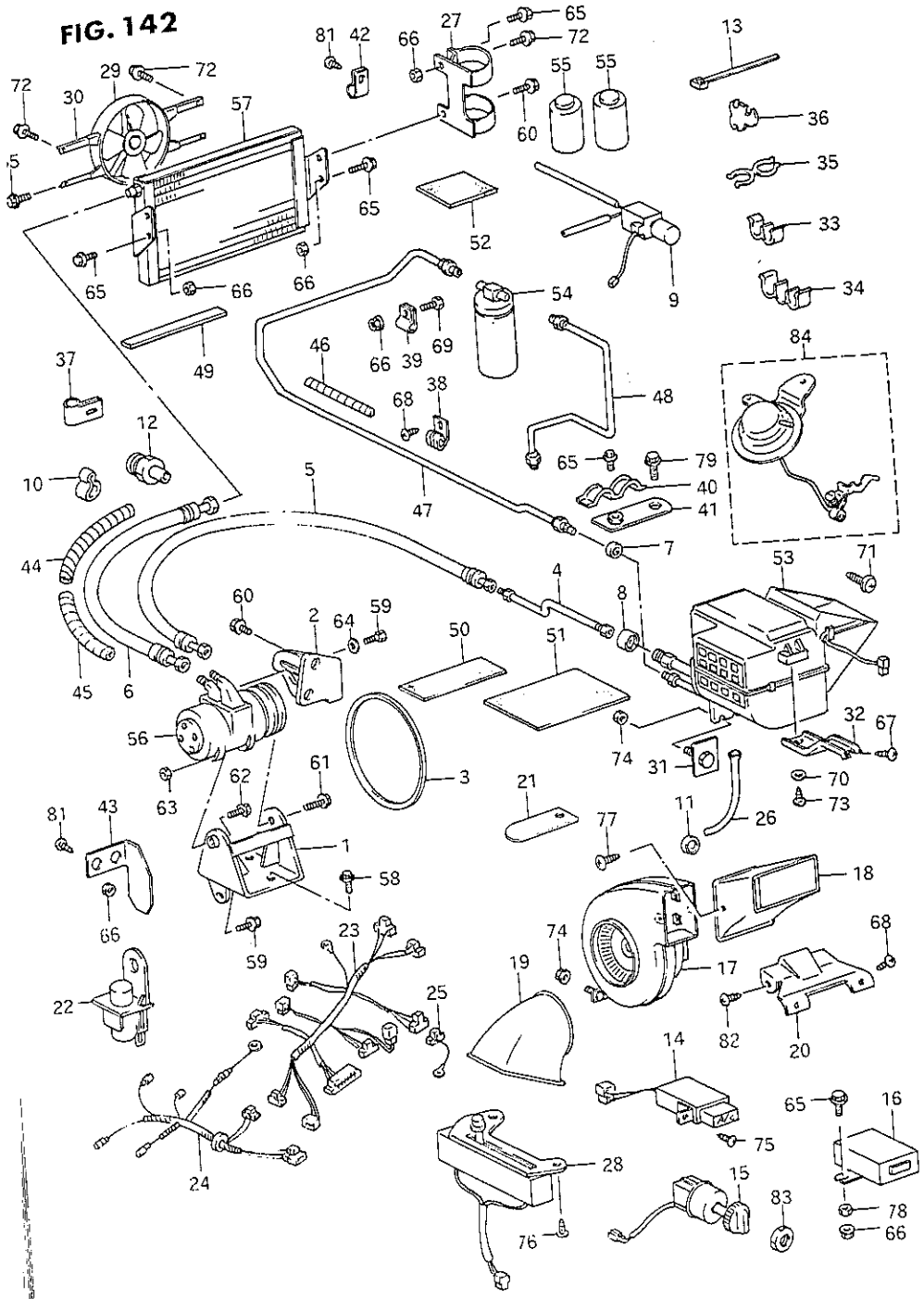

FIG.142(2-H- 2) CAR AIR CON

REF.NO.	PART NO.	DESCRIPTION	Q'TY Q/W	Q'TY V	REMARKS
	95000-70A00	CAR AIR CON ASSY	1	1	RHD,W/heater
	95000-70A10	CAR AIR CON ASSY	1	1	RHD,N/heater
	95000-70A20	CAR AIR CON ASSY	1	1	LHD,W/heater
	95000-70A30	CAR AIR CON ASSY	1	1	LHD,N/heater
1	95111-82000	.BRACKET, compressor	1	1	
2	95112-82000	.STAY, compressor	1	1	
3	95141-83000	.V BELT	1	1	
4	95751-83021	.PIPE, suction	1	1	LHD
5-1	95710-83000	.HOSE, compressor suction	1	1	RHD
5-2	95710-83021	.HOSE, compressor suction	1	1	LHD
6-1	95720-83000	.HOSE, CPRSR delivery	1	1	RHD
6-2	95720-83020	.HOSE, CPRSR delivery	1	1	LHD
7	95762-83000	.GROMMET, liquid	1	1	
8	95763-83000	.GROMMET, suction	1	1	
9-1	95551-83000	.VSV ASSY	1	1	RHD
9-2	95551-83020	.VSV ASSY	1	1	LHD
10	95761-80000	.BUSH, suction hose	1	1	
11	95765-74000	.GROMMET, drain	1	1	
12	95558-78100	.JOINT, hose	1	1	
13	95779-80000	.CLAMP, wiring/vacuum	7	7	
14	95571-70A00	.SWITCH ASSY, control	1	1	W/heater
15	95571-83050	.SWITCH ASSY, control	1	1	N/heater
16	95572-83000	.AMPLIFIER ASSY	1	1	
17-1	95510-80070	.BLOWER ASSY	1	1	RHD,N/heater
17-2	95510-80090	.BLOWER ASSY	1	1	LHD,N/heater
18	95451-80070	.DUCT, air No.1	1	1	
19-1	95452-80070	.DUCT, air No.2	1	1	RHD,N/heater
19-2	95452-80090	.DUCT, air No.2	1	1	LHD,N/heater
20	95962-80070	.BRACKET, cover	1	1	N/heater
21	95778-86000	.CLAMP	1	1	LHD
22	58860-60A00	.RELAY ASSY	1	1	
23-1	95582-70A00	.HARNESS, wiring No.1	1	1	RHD
23-2	95582-70A20	.HARNESS, wiring No.1	1	1	LHD
24-1	95583-70A00	.HARNESS, wiring No.2	1	1	RHD
24-2	95583-70A20	.HARNESS, wiring No.2	1	1	LHD
25	95584-83000	.HARNESS, meter	1	1	

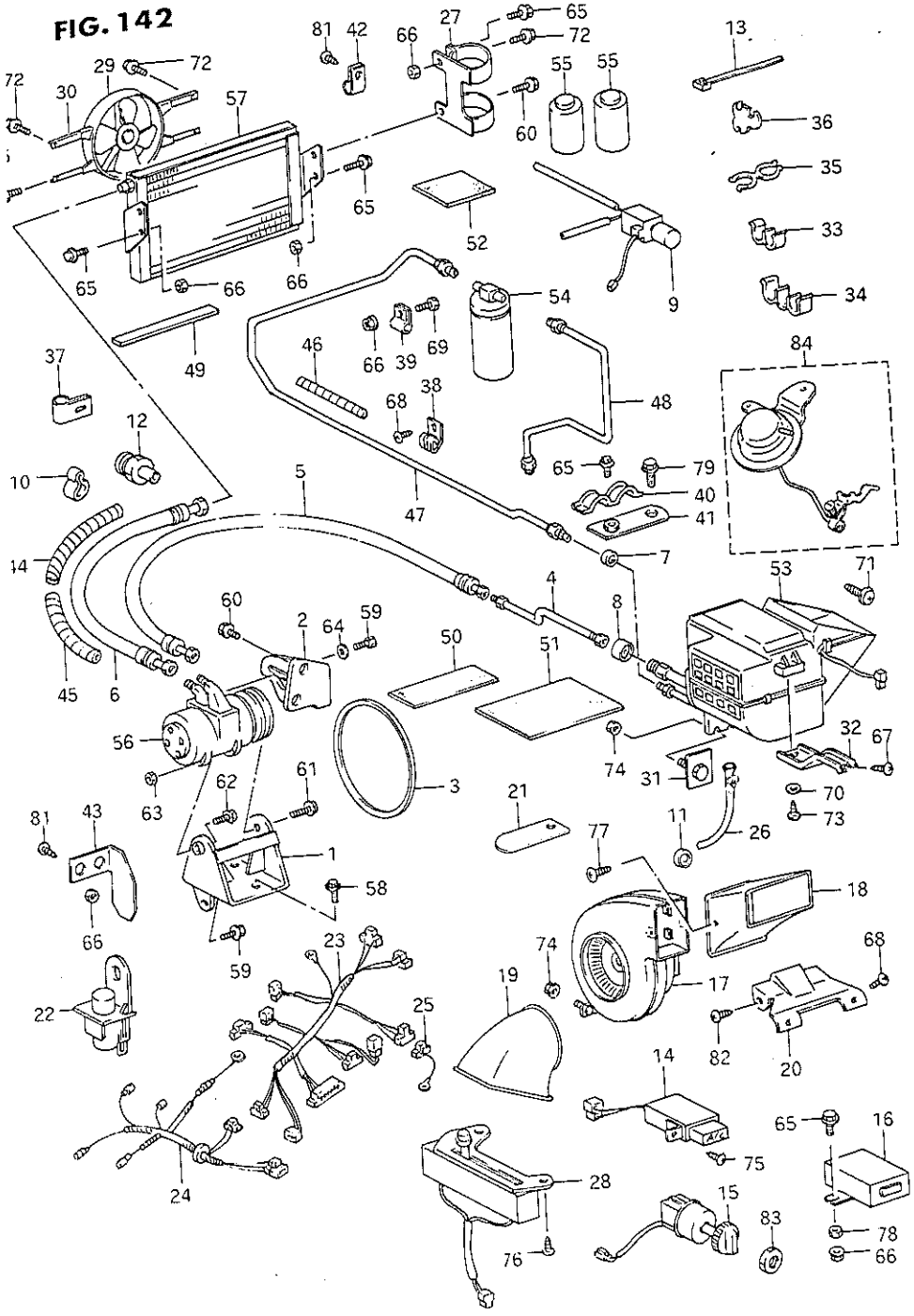

SJ413-4 E1

FIG.142(2-H- 3) CAR AIR CON

REF.NO.	PART NO.	DESCRIPTION	Q'TY Q/W	Q'TY V	REMARKS
26-1	95491-83000	.HOSE, drain	1	1	RHD
26-2	95491-83020	.HOSE, drain	1	1	LHD
27	95931-80000	.HOLDER, receiver	1	1	
28	95591-70A00	.RESISTOR ASSY, variable	1	1	W/heater
29-1	95520-83000	.SHROUD, fan	1	1	RHD
29-2	95520-83020	.SHROUD, fan	1	1	LHD
30	95981-83000	.BRACKET, shroud	1	1	
31	95911-80000	.BOLT, bracket	1	1	
32-1	95961-83000	.BRACKET, cooling unit	1	1	RHD
32-2	95961-83020	.BRACKET, cooling unit	1	1	LHD
33-1	09408-00033	.CLAMP, vacuum	3	3	RHD
33-2	09408-00033	.CLAMP, vacuum	2	2	LHD
34	09408-00034	.CLAMP, vacuum	1	1	
35	95778-83000	.CLAMP, vacuum	1	1	
36	95777-80000	.CLAMP	1	1	LHD
37	95771-83000	.CLAMP, pipe	1	1	RHD
38	95779-84300	.CLAMP, pipe	1	1	RHD
39	95773-83000	.CLAMP, pipe	1	1	LHD
40	95778-83020	.CLAMP, pipe	1	1	LHD
41	95779-83020	.BRACKET	1	1	LHD
42	95781-83000	.CLAMP, pipe	1	1	RHD
43	95776-83020	.BRACKET	1	1	LHD
44	95765-78120	.PROTECTOR, distributor hose	1	1	LHD
45	95765-83000	.PROTECTOR, pipe	1	1	LHD
46	95766-83000	.PROTECTOR, brake hose	2	2	LHD
47-1	95741-83000	.PIPE, receiver dryer out	1	1	RHD
47-2	95741-83020	.PIPE, receiver dryer out	1	1	LHD
48-1	95751-83000	.PIPE, condenser out	1	1	RHD
48-2	95751-83020	.PIPE, condenser out	1	1	LHD
49	95621-83000	.PACKING	1	1	RHD
50	95622-80000	.PACKING	1	1	W/heater
51	95765-84000	.PACKING	2	2	
52	95624-83000	.PACKING	1	1	RHD
53-1	95400-83000	.UNIT, evaporator	1	1	RHD
53-2	95400-83020	.UNIT, evaporator	1	1	LHD

SJ413-4 E1

FIG. 142

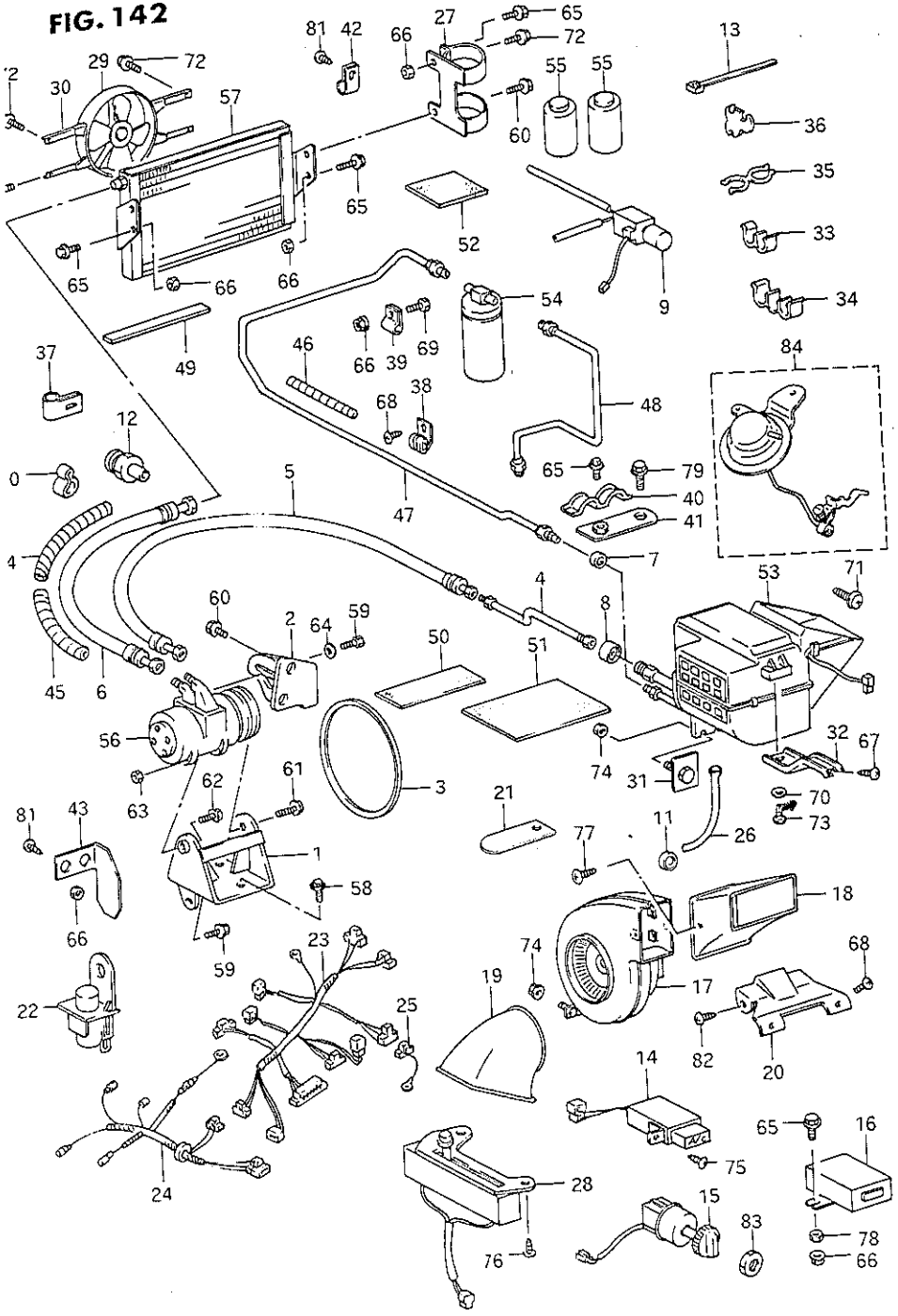

FIG.142(2-H- 4) CAR AIR CON

REF.NO.	PART NO.	DESCRIPTION	Q'TY Q/W	Q'TY V	REMARKS
54	95330-83000	.RECEIVER, dryer	1	1	
55	95790-74000	.DRUM, refrigerant	2	2	
56	95200-83000	.COMPRESSOR/MAGNET CLUTCH	1	1	
57-1	95310-83000	.CONDENSER	1	1	RHD
57-2	95310-83020	.CONDENSER	1	1	LHD
58	01517-10203	.BOLT	2	2	
59	01517-08203	.BOLT	2	2	
60	01517-08203	.BOLT	2	2	
61	01517-08253	.BOLT	1	1	
62	95911-82000	.BOLT	1	1	
63	08310-12083	.NUT	1	1	
64	95912-83080	.WASHER	1	1	
65-1	01517-06166	.BOLT	9	9	RHD
65-2	01517-06166	.BOLT	8	8	LHD
66-1	08316-16066	.NUT	9	9	RHD,W/heater
66-2	08316-16066	.NUT	10	10	LHD,W/heater
66-3	08316-16066	.NUT	8	8	RHD,N/heater
66-4	08316-16066	.NUT	12	12	LHD,N/heater
67	03151-06166	.SCREW	2	2	
68-1	03151-05166	.SCREW	5	5	RHD,W/heater
68-2	03151-05166	.SCREW	5	5	RHD,N/heater
68-3	03151-05166	.SCREW	2	2	LHD,W/heater
68-4	03151-05166	.SCREW	3	3	LHD,N/heater
69	01107-06356	.BOLT	1	1	LHD,W/heater
70-1	08322-21066	.WASHER	2	2	RHD LHD,N/heater
70-2	08322-21066	.WASHER	3	3	LHD,W/heater
71	03511-05166	.SCREW	2	2	
72-1	95917-83000	.BOLT	3	3	RHD,N/heater
72-2	95917-83000	.BOLT	4	4	RHD,W/heater LHD
73	03211-06166	.SCREW	2	2	
74-1	08316-16088	.NUT	1	1	LHD RHD,W/heater
74-2	08316-16088	.NUT	3	3	RHD,N/heater

SJ413-4 E1

FIG. 142

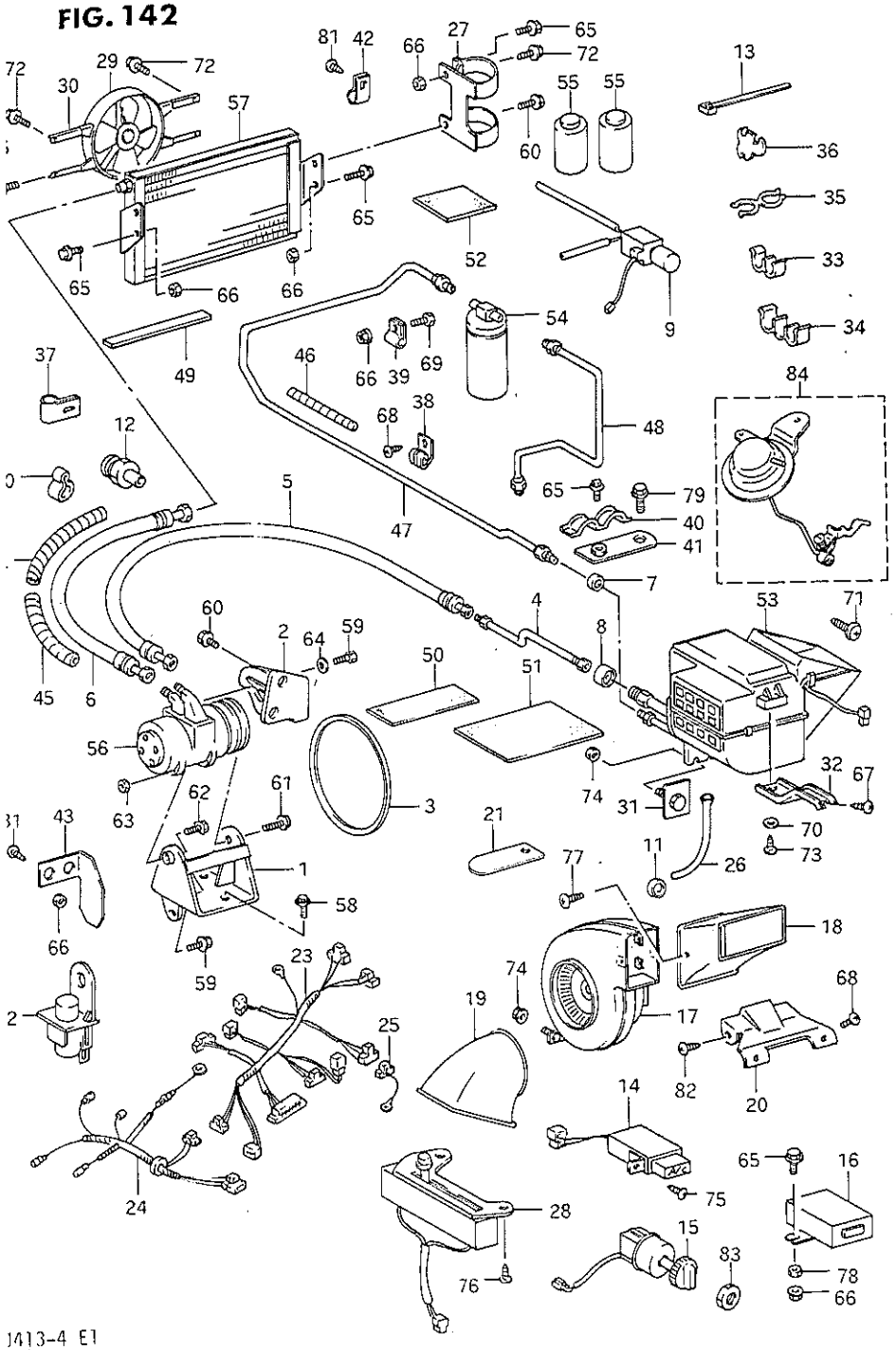

J413-4 E1

FIG.142(2-H- 5) CAR AIR CON

REF.NO.	PART NO.	DESCRIPTION	Q'TY Q/W	Q'TY V	REMARKS
75	01517-06206	.BOLT	2	2	
76-1	95915-83000	.SCREW	2	2	N/heater
76-2	95915-83000	.SCREW	4	4	W/heater
77	03111-04126	.SCREW	2	1	N/heater
78	08310-11066	.NUT	2	1	
79	01517-06406	.BOLT	1	1	RHD
80	95916-83000	.BOLT	1	1	LHD
81	95921-83000	.SCREW	1	1	RHD
82-1	02112-06126	.SCREW	2	1	N/heater
82-2	02112-06126	.SCREW	1	1	W/heater
83	95918-83000	.NUT	1	1	
84-1	13280-82100	.IDLE UP ASSY	1	1	CARBURETOR:AISAN
84-2	95550-83050	.IDLE UP ASSY	1	1	CARBURETOR:HITACHI

SJ413-4 E1

PARTS NUMBER INDEX

INDEX DE Nº DE PIECE

INHALTSVERZEICHNIS DER ERSATZTEILNMMERN

INDICE DE No. DE PIEZAS

PARTS NUMBER INDEX
INDEX DE Nº DE PIECE
INHALTSVERZEICHNIS DER ERSATZTEILNMMERN
INDICE DE No. DE PIEZAS

10000

PART NO.	FIG.NO.-REF.NO.
11100-83814	1 - 2
11110-82602	2 - 1
11112-73001	2 - 2
11115-82000-001	2 - 3
11141-82611	1 - 3
	2 - 6
11161-83000	2 - 14
11170-83010	2 - 9
11180-78101	2 - 12
11189-82600	1 - 4
	2 - 10
11191-79200	9 - 22
	10 - 20
11192-83000	9 - 23
	10 - 21
11193-80000	9 - 19
11200-82504	3 - 1
11200-82604	3 - 1
11241-73003	3 - 8
11311-83000	3 - 10
11320-83000	3 - 11
11341-82000	6 - 22
11349-82000	1 - 9
	6 - 23
11380-83000	8 - 14
11383-82000	8 - 16
11390-82000	8 - 15
11394-82000	8 - 17
	8 - 18
11396-82000	8 - 19
11400-83816	1 - 1
11510-83003	4 - 1
11610-80020	5 - 1
11641-83000	5 - 4
11651-83000	5 - 5
11661-83000	5 - 8
11710-80010	5 - 12
11741-80010	5 - 16
11851-73001	9 - 5
	10 - 5
11851-85000	39 - 30
11955-82070	36 - 5
11955-83050	36 - 5
11955-83090	36 - 5
11955-83110	36 - 5
11958-83000	36 - 4
11962-83010	36 - 1
11962-83020	36 - 1
11967-82000	36 - 7
12100-82810	6 - 6
12100-82810-025	6 - 6
12111-82010-0A0	6 - 1
12111-82010-0B0	6 - 1
12111-82010-025	6 - 1
12111-82010-050	6 - 1
12111-83000-0A0	6 - 1
12111-83000-0B0	6 - 1
12111-83000-025	6 - 1
12111-83000-050	6 - 1
12140-82051	6 - 2
12140-82051-025	6 - 2
12140-82051-050	6 - 2
12151-82000	6 - 3
12160-82000	6 - 4
12220-82501	6 - 7
12221-82600	6 - 7
12300-82810-0AA	6 - 8
12300-82810-0BA	6 - 8
12300-82810-0CA	6 - 8
12300-82810-0DA	6 - 8
12300-82810-0EA	6 - 8
12300-82820	6 - 9
12300-82820-012	6 - 9
12340-82000-0A0	6 - 8
12340-82000-0B0	6 - 8
12340-82000-0C0	6 - 8
12340-82000-0D0	6 - 8
12340-82000-0E0	6 - 8
12597-82001	36 - 6
12597-83001	36 - 6
12610-82000	6 - 11
12611-83000	6 - 11
12620-83000	6 - 17
12631-82000	6 - 15
12635-78400	6 - 16
12710-83000	7 - 1
12741-82010	8 - 1
12761-82000	8 - 5
12810-82002	8 - 6
12821-82001	8 - 7
12822-82001	8 - 9
12823-82001	8 - 8
12841-82000	7 - 6
12848-82000	7 - 7
12860-82600	7 - 3
12870-82600	7 - 4
12891-82001	7 - 9
12911-82000	7 - 10
12915-82050	7 - 11
12921-82000	7 - 12
12931-82000	7 - 13
12932-82000	7 - 14
12933-73000	7 - 15
13110-83000	9 - 6
13110-83010	9 - 6
13110-83020	9 - 6
13110-83030	9 - 6
13110-83040	9 - 6
13110-83090	9 - 6
13110-83110	10 - 6
13110-83200	9 - 6
13119-82601	1 - 7
	9 - 7
	10 - 7
13121-83000	10 - 1
13125-83000	9 - 2
13129-83000	9 - 1
13191-83000	9 - 12
13191-83011	10 - 13
13192-83000	9 - 13
13192-83011	10 - 14
13200-83000	11
13200-83010	12
	12
13200-83020	12
13200-83090	14
13200-83160	13
13200-83810	13 - 85
13200-86810	11 - 57

PART NO.	FIG.NO.-REF.NO.
13200-86810	12 - 66
	14 - 68
13212-82030	11 - 53
13212-83010	12 - 15
13212-83090	14 - 15
13213-82100	11 - 13
	12 - 16
13213-82210	14 - 16
13214-82100	11 - 14
	12 - 18
13215-82100	14 - 18
	11 - 15
	12 - 20
	14 - 20
13216-82100	11 - 17
	12 - 21
	14 - 21
13218-82100	11 - 20
	12 - 23
	14 - 23
13219-82040	11 - 16
	12 - 19
	14 - 19
13220-83050	13 - 8
13221-82100	11 - 19
	12 - 17
	14 - 17
13223-82100	11 - 18
	12 - 22
	14 - 22
	14 - 58
13224-82030	11 - 54
13225-82030	11 - 55
13225-82100	12 - 26
	14 - 26
13226-82100	12 - 27
	14 - 27
13227-82080	13 - 3
13228-82080	13 - 1
13229-82080	13 - 2
13233-82020	13 - 16
13234-83060	13 - 14
13235-83100	13 - 6
13236-83000	11 - 21
	12 - 24
13237-82100	14 - 24
	11 - 22
	12 - 25
13238-82100	14 - 25
	12 - 28
13240-83050	14 - 28
13241-82000	13 - 17
13241-82100	13 - 18
	12 - 29
	14 - 29
13243-82100	11 - 43
	12 - 52
	14 - 53
13244-82100	11 - 27
	12 - 34
13251-82000	14 - 36
13252-82000	13 - 23
13252-83000	13 - 24
	11 - 1
	12 - 1
13254-82000	14 - 1
13254-82100	13 - 32
	11 - 25
13254-83090	12 - 32
	14 - 32
13256-82100	11 - 2
	12 - 2
	14 - 2
13257-82100	11 - 3
	12 - 3
13258-83060	14 - 3
13258-83090	13 - 36
13259-82100	14 - 4
	11 - 6
	12 - 6
13259-83060	14 - 6
13260-83000	13 - 35
	11 - 23
	12 - 30
13260-83090	14 - 30
13261-83000	11 - 56
13261-83090	14 - 33
13261-83100	13 - 28
13262-82000	13 - 29
13262-83090	14 - 34
13263-82100	11 - 8
	12 - 8
	14 - 8
13265-83060	13 - 21
13266-82000	13 - 38
13266-83060	13 - 22
13267-82000	13 - 25
13269-82100	11 - 24
	12 - 31
	14 - 31
13272-83000	11 - 9
	12 - 9
	14 - 9
13280-82100	9 - 28
	142 - 84
13282-82100	11 - 10
	11 - 11
	11 - 52
	12 - 10
	12 - 11
	12 - 13
	12 - 63
	14 - 10
	14 - 11
	14 - 67
13291-82100	12 - 14
	14 - 14
13296-82100	11 - 12
	12 - 12
	14 - 12
13297-82100	12 - 62
	14 - 66
13297-83000	11 - 51
13298-82300	14 - 13
13310-82640	11 - 26
	12 - 33
	14 - 35
13318-82020	13 - 71
13319-82000	13 - 39
13319-82100	12 - 43
13320-83001	11 - 33
13320-83011	12 - 41
	14 - 43
13321-82000	13 - 44
13321-82100	11 - 35

PART NO.	FIG.NO.-REF.NO.
3321-82100	12 - 44
	14 - 45
3322-82000	13 - 45
3322-82100	11 - 37
	12 - 46
	14 - 47
3323-82000	13 - 40
3323-82100	11 - 36
	12 - 45
	14 - 46
3324-82000	13 - 43
3324-82100	12 - 35
	14 - 37
3325-82000	13 - 46
3326-83000	11 - 41
	12 - 50
	14 - 51
3327-82100	11 - 39
	12 - 48
	14 - 49
13329-82100	11 - 42
	12 - 51
	14 - 52
13330-82100	11 - 31
	12 - 39
	14 - 41
13330-83100	13 - 47
13331-83000	11 - 38
	12 - 47
	14 - 48
13332-82000	13 - 41
13337-83060	13 - 52
13338-83060	13 - 53
13341-83001	11 - 44
	12 - 55
	14 - 60
13341-83010	12 - 54
	14 - 59
13344-82300	12 - 58
	14 - 64
13346-83000	11 - 46
	12 - 57
	14 - 63
13347-82100	11 - 48
13347-82230	11 - 47

PART NO.	FIG.NO.-REF.NO.
13347-82300	14 - 62
13350-83011	12 - 59
13350-83090	14 - 57
13350-83100	13 - 55
13351-83010	12 - 60
	14 - 56
13352-83090	14 - 55
13360-83000	11 - 49
	14 - 54
13360-83010	12 - 53
13360-83020	12 - 53
13361-83060	13 - 58
13362-82000	13 - 59
13363-82000	13 - 33
13364-82000	13 - 42
13371-82000	13 - 49
13371-82100	11 - 28
	12 - 36
	14 - 38
13372-82100	11 - 29
	12 - 37
	14 - 39
13372-86060	13 - 48
13373-82100	11 - 32
	12 - 40
	14 - 42
13374-82000	13 - 7
13374-82100	11 - 40
	12 - 49
	14 - 50
13375-82000	13 - 54
13375-82100	11 - 50
	12 - 61
	14 - 65
13377-83050	13 - 11
13381-82100	11 - 30
	12 - 38
	14 - 40
13382-83060	13 - 60
13384-83060	13 - 61
13391-83050	13 - 65
13392-83060	13 - 66
13393-83060	13 - 67
13394-83050	13 - 68
13395-83060	13 - 69

PART NO.	FIG.NO.-REF.NO.
13396-83060	13 - 70
13421-83100	13 - 80
13422-83100	13 - 79
13423-83050	13 - 78
13424-83050	13 - 76
13425-83050	13 - 75
13426-83050	13 - 74
13427-83050	13 - 77
13428-83100	13 - 83
13429-83100	13 - 84
13700-83001	15 - 1
13700-83011	15 - 1
13700-83030	17 - 1
13700-83040	16 - 1
13712-83000	15 - 3
	16 - 3
	17 - 3
13714-80030	16 - 31
13715-82110	16 - 13
	17 - 13
13731-83000	15 - 6
	16 - 6
	17 - 6
13740-83000	15 - 8
13740-83010	15 - 8
13740-83030	16 - 8
	17 - 8
13747-83000	16 - 30
13748-83030	16 - 12
	17 - 12
13749-82111	16 - 14
	17 - 14
13780-83000	15 - 2
	16 - 2
	17 - 2
13812-83001	15 - 4
	16 - 4
	17 - 4
13813-83000	15 - 5
	16 - 5
	17 - 5
13818-82000	16 - 15
	17 - 15
13819-83000	16 - 16
	17 - 16

PART NO.	FIG.NO.-REF.NO.
13830-83001	15 - 14
	17 - 22
13830-83012	16 - 22
13839-83000	9 - 3
13839-83010	10 - 2
13840-83000	15 - 22
	16 - 33
	17 - 30
13860-83000	15 - 23
	16 - 34
13870-83000	17 - 31
	15 - 25
	16 - 36
13881-83001	17 - 33
	15 - 19
13881-83011	17 - 27
	16 - 27
13885-83000	15 - 15
	17 - 23
13885-83010	16 - 23
13891-83002	16 - 28
13896-83000	15 - 26
	16 - 37
	17 - 34
14111-83003	19 - 1
14111-83013	20 - 1
14120-83003	19 - 7
14120-83011	20 - 7
14121-83023	19 - 7
14130-83002	19 - 8
14140-83000	20 - 8
	1 - 8
	19 - 2
	20 - 2
14150-83002	21 - 1
14150-83015	22 - 1
14150-83032	22 - 1
14183-82601	21 - 2
	22 - 2
14231-80010	21 - 18
14281-78010	22 - 19
	21 - 12
	22 - 13
14281-79010	21 - 13
	22 - 14

PART NO.	FIG.NO.-REF.NO.
14283-83000	22 - 5
14284-83002	21 - 5
	22 - 6
14285-83010	21 - 6
	22 - 7
14287-83000	21 - 15
	22 - 17
14300-83300	21 - 8
14300-83310	21 - 8
	21 - 8
14300-83401	22 - 9
14300-83411	21 - 8
	21 - 8
	21 - 8
	22 - 9
14492-82600	21 - 3
	22 - 3
14699-83000	21 - 9
	22 - 10
15100-83000	23 - 1
	24 - 1
15100-83010	23 - 1
15315-82000	23 - 2
	24 - 2
15319-73001	1 - 5
	23 - 3
	24 - 3
15410-79100	23 - 6
15410-80200	24 - 6
15420-80001	24 - 7
15810-80011	23 - 9
	24 - 10
15810-80021	23 - 9
15810-80311	23 - 9
	24 - 10
15810-80321	23 - 9
15819-78000	23 - 27
	24 - 29
15821-83310	23 - 10
	24 - 11
15821-83320	23 - 10
15830-83001	23 - 16
	23 - 16
	24 - 18
15840-83002	23 - 13

PART NO.	FIG.NO.-REF.NO.
15840-83011	24 - 16
15861-83350	23 - 18
	24 - 20
15861-83360	23 - 18
15861-83510	23 - 18
	24 - 20
15861-83520	23 - 18
15870-83002	23 - 19
	24 - 21
15881-83002	23 - 22
	24 - 24
15910-83000	18 - 1
15910-83010	18 - 1
15910-83300	18 - 1
15930-83000	18 - 3
15930-83010	18 - 3
15939-83000	18 - 4
15991-83000	18 - 2
16100-82822	25 - 1
16119-82000	1 - 10
	25 - 13
16131-82600	25 - 2
16132-82600	25 - 3
16151-78100	25 - 6
16152-78100	25 - 7
16153-78100	25 - 8
16161-82601	25 - 4
16171-78100	25 - 10
16173-78100	25 - 11
16510-83001	3 - 9
16520-83002	4 - 9
16910-83000	4 - 12
16920-60A00	2 - 18
16930-82001	4 - 13
17110-83000	27 - 12
17110-83010	26 - 8
17111-73010	26 - 8
17120-83000	27 - 8
17131-80000	26 - 9
17400-82811	26 - 1
17400-83810	26 - 1
	27 - 1
17431-82000	1 - 11
	26 - 2
	27 - 2

PART NO.	FIG.NO.-REF.NO.
511-82000	26 - 6
	27 - 6
521-82030	26 - 7
	27 - 7
550-83001	29 - 6
	30 - 6
'550-83011	29 - 6
	30 - 6
'550-83021	29 - 6
	30 - 6
7550-83031	29 - 6
	30 - 6
7561-73000	29 - 3
	30 - 3
7569-80000	1 - 12
	29 - 2
	30 - 2
7600-83821	29 - 1
	30 - 1
7600-83831	29 - 1
17700-83001	28 - 1
17751-72010	28 - 3
17759-72010	28 - 4
17761-83000	28 - 11
17841-83000	29 - 11
	30 - 11
	29 - 12
17851-83000	30 - 12
	29 - 13
17852-83000	30 - 13
17859-83001	29 - 9
	30 - 9
17860-83000	29 - 15
	30 - 15
17871-83000	30 - 17
17871-83010	29 - 17
17872-83000	30 - 19
17872-83010	29 - 19
17873-83000	29 - 20
	30 - 20
17910-82000	49 - 34
17920-78120	28 - 2
17921-82000	49 - 37
17931-72000	28 - 7
17932-78100	28 - 8

PART NO.	FIG.NO.-REF.NO.
17999-73000	36 - 2
17999-80010	36 - 3
18111-82000	33 - 1
18111-82320	34 - 7
18112-83010	33 - 4
18114-83000	13 - 72
18115-83000	32 - 8
	33 - 26
18115-83010	12 - 42
	14 - 44
18117-83010	32 - 18
18118-80010	35 - 13
	13 - 73
	9 - 18
	10 - 16
18119-80400	33 - 19
18123-80400	32 - 15
	35 - 10
18123-83000	32 - 12
18123-83010	13 - 82
18133-80400	12 - 64
18212-83000	33 - 17
18213-83000	20 - 15
18417-83000	33 - 33
18419-83000	33 - 22
18438-83000	33 - 20
18471-83020	33 - 8
18473-83020	33 - 24
18474-83000	33 - 45
18480-79110	11 - 34
18529-78101	33 - 2
	34 - 8
18550-73031	33 - 7
	34 - 6
18550-82021	31 - 1
	32 - 1
	33 - 28
	34 - 1
	35 - 1
18560-80010	35 - 15
18560-83000	33 - 40
18589-78101	33 - 5

20000

PART NO.	FIG.NO.-REF.NO.
22100-83020	37 - 1
22400-83021	37 - 4
23260-83012	37 - 6
23266-83001	37 - 12
23710-83012	18 - 7
23710-83023	18 - 7
23911-83001	18 - 13
23915-83000	18 - 15
24110-83001	38 - 1
24121-83001	38 - 7
24131-83002	38 - 25
24210-83010	38 - 10
24220-83010	38 - 13
24230-83000	38 - 15
24250-83000	38 - 17
24351-83000	38 - 26
24411-83000	38 - 31
24412-83000	38 - 36
24413-83001	38 - 41
24421-83004	38 - 32
24422-83003	38 - 37
24423-83003	38 - 42
24431-83001	38 - 33
24432-83001	38 - 38
24436-83000	38 - 34
24551-83000	38 - 45
24560-83001	38 - 47
24671-83000	38 - 49
24681-83000	38 - 50
24700-83000	39 - 1
24700-83050	39 - 1
24741-83001	39 - 6
24770-83004	39 - 14
24780-83010	39 - 18
24821-09001	39 - 23
25121-83001	47 - 22
25125-80001	41 - 1
25211-83002	41 - 14
25221-83001	40 - 1
	40 - 2

PART NO.	FIG.NO.-REF.NO.
25241-83000	40 - 6
25261-83002	40 - 7
25271-83002	40 - 8
25341-69002	41 - 3
25342-69002	41 - 4
25411-83001	40 - 3
25420-83001	40 - 4
25451-83001	40 - 5
25451-83501	40 - 5
27101-83001	42 - 1
27102-83001	42 - 6
27103-83001	42 - 13
27103-83201	42 - 13
27110-79000	47 - 15
27110-83001	43 - 1
27110-83051	44 - 7
	44 - 40
27110-83251	44 - 34
27131-83001	42 - 5
	42 - 12
	42 - 19
27140-83001	42 - 4
27153-83000	42 - 11
	42 - 18
27180-83001	42 - 9
27200-83810	42 - 16
	42 - 2
	42 - 7
	42 - 14
27300-83821	43 - 2
27315-83001	43 - 3
27331-83000	43 - 15
27341-83000	43 - 16
27341-83100	43 - 16
27351-83000	43 - 17
27355-83000	43 - 18
27356-63000	43 - 19
27411-83000	43 - 21
27421-83000	43 - 23
27450-83000	43 - 10
27461-83000	43 - 26
27462-63202	43 - 27
27960-80000	47 - 42
27962-80001	47 - 43
27963-80002	47 - 40

PART NO.	FIG.NO.-REF.NO.
28101-83010	41 - 16
28113-83010	41 - 17
28135-80000	41 - 18
28136-83000	41 - 19
28137-83000	41 - 21
28381-83000	45 - 21
28381-83061	45 - 21
29111-83050	44 - 1
29111-83060	44 - 1
29117-80050	44 - 5
29118-80050	44 - 5
29119-80050	44 - 5
29121-83050	44 - 9
29131-80050	44 - 10
29136-80050	44 - 15
29141-80050	44 - 18
29143-80050	44 - 32
29147-80050	44 - 31
29148-80050	44 - 31
29149-80050	44 - 31
29151-80050	44 - 36
29200-80811	47 - 3
29211-83050	44 - 20
29221-83050	44 - 22
29231-80050	44 - 27
29241-80050	44 - 25
	44 - 28
29310-63001	47 - 28
29310-80050	45 - 1
29321-80052	45 - 2
29331-80051	45 - 3
29332-80052	45 - 4
29341-80700	45 - 13
29344-83010	45 - 12
29345-80051	45 - 16
29346-80002	45 - 18
29347-80001	45 - 19
29348-80050	45 - 15
29411-83050	44 - 42
29421-80450	44 - 43
29431-80050	44 - 44
29510-80052	46 - 1
29510-80061	46 - 1
29515-80050	46 - 8
29525-80050	46 - 7

PART NO.	FIG.NO.-REF.NO.
29527-80050	46 - 2
	46 - 14
29530-80050	46 - 11
29535-80050	46 - 12
29540-80050	46 - 13
29610-83001	46 - 23
	46 - 24
29620-80700	46 - 20
29630-80700	46 - 21
29821-80040	47 - 4
29831-80040	47 - 11
29841-80040	47 - 37
29844-80040	47 - 29
29845-80040	47 - 33
29847-80040	47 - 35
29850-80040	47 - 36
29911-80040	47 - 18
29911-80050	44 - 29
29916-80050	47 - 19
29921-80041	47 - 25
29928-80040	47 - 21
29941-80050	45 - 11
29945-80051	46 - 9
29946-80051	46 - 10
29951-83050	44 - 8
	44 - 35
	44 - 41
29956-80050	44 - 13
29959-80050	44 - 24
29962-80050	44 - 12
29963-80050	47 - 2
29971-80051	44 - 6
	44 - 39
29972-80050	44 - 33
29973-80050	44 - 45
29974-80050	47 - 10
29975-80050	44 - 14
29976-80050	47 - 1
29981-80050	44 - 2
	44 - 30
	44 - 37
29982-80050	44 - 4
29983-80050	44 - 11
29984-80050	44 - 21
29985-80050	44 - 23

PART NO.	FIG.NO.-REF.NO.
:9986-80050	44 - 19
:9992-80050	44 - 3
	44 - 38
:9995-80050	45 - 10
:9996-80050	45 - 14

30000

31100-83010	48 - 1
31100-83030	48 - 1
31110-80092	48 - 13
31110-83030	48 - 13
31131-80090	48 - 14
31132-80090	48 - 16
31135-72030	48 - 17
31136-79030	48 - 20
31151-83010	48 - 2
31152-79030	48 - 3
31170-80092	48 - 18
31171-71310	49 - 2
31172-79030	48 - 19
31173-79030	48 - 15
31191-82030	48 - 8
31220-83020	48 - 4
31261-82130	48 - 7
31311-82030	48 - 9
31311-82631	48 - 9
31313-79030	48 - 12
31320-82130	48 - 11
31320-82631	48 - 11
31361-79030	48 - 10
31400-83010	49 - 1
31514-86510	49 - 26
31515-85250	49 - 23
31516-85250	49 - 21
31517-82610	49 - 22
31580-51A10	49 - 5
31582-82610	49 - 6
31585-85250	49 - 7
31586-85250	49 - 8
31587-85250	49 - 9
31611-86510	49 - 13
31612-51A20	49 - 11

PART NO.	FIG.NO.-REF.NO.
31613-82610	49 - 12
31614-86510	49 - 24
31616-85250	49 - 28
31621-86510	49 - 16
31631-82610	49 - 18
31635-82610	49 - 19
31651-85250	49 - 15
31656-82611	49 - 17
31691-85250	49 - 25
31710-51A10	49 - 10
31775-85250	49 - 3
31792-85250	49 - 4
32500-86510	49 - 20
33100-83011	50 - 1
33100-83021	50 - 1
	50 - 1
33100-83032	51 - 1
33151-80020	50 - 8
	51 - 8
33152-82010	50 - 6
	51 - 6
33230-80061	50 - 10
	51 - 10
33230-83020	50 - 10
	50 - 10
33239-76410	50 - 11
	51 - 11
33267-83010	50 - 12
	51 - 12
33268-83010	50 - 13
	51 - 13
33278-52010	50 - 14
	51 - 14
33279-80020	50 - 9
	51 - 9
33297-80020	51 - 7
33297-81060	50 - 7
33310-82010	51 - 4
33310-82110	50 - 4
33321-75110	50 - 2
	51 - 2
33324-79610	50 - 3
	51 - 3
33370-83011	50 - 5
33370-83032	51 - 5

PART NO.	FIG.NO.-REF.NO.
33410-83010	50 - 18
33410-83020	51 - 18
33471-77011	50 - 20
	51 - 20
33551-60A00	58 - 35
33552-86000	58 - 36
33610-80020	52 - 1
33610-80030	52 - 1
33660-73010	52 - 2
	52 - 2
33661-51020	52 - 2
33700-83010	50 - 21
33700-83020	51 - 21
33710-83010	50 - 22
33710-83020	51 - 22
33730-80020	50 - 26
33730-83010	50 - 23
33730-83020	51 - 23
33740-83010	50 - 24
33740-83020	51 - 24
33750-83020	51 - 25
33760-80020	50 - 25
33760-83020	51 - 26
33800-70A00	52 - 3
33800-70A10	52 - 3
33850-70A00	52 - 5
33850-80030	52 - 5
33883-63200	50 - 27
	51 - 27
33883-83020	50 - 28
	51 - 28
33920-83030	59 - 40
33925-83000	59 - 41
34100-70A00	54 - 1
34100-70A10	54 - 1
34100-70A50	53 - 1
34100-70A60	53 - 1
34100-70A80	53 - 1
34100-70A90	53 - 1
34100-71A00	54 - 1
34100-71A10	54 - 1
34100-71A40	53 - 1
	53 - 1
34100-71A50	54 - 1
	54 - 1

PART NO.	FIG.NO.-REF.NO.
34100-71A70	53 - 1
34100-71A80	54 - 1
34112-70A00	54 - 6
34112-70A30	53 - 5
34113-70A00	54 - 7
34113-70A30	53 - 6
34120-70A00	54 - 2
34120-70A10	54 - 2
34120-70A20	54 - 2
34120-70A50	53 - 2
34120-70A60	53 - 2
34120-70A80	53 - 2
34120-70A90	53 - 2
34120-71A00	54 - 2
34120-71A40	53 - 2
34120-71A50	53 - 2
	54 - 2
	54 - 2
34120-71A70	53 - 2
34120-71A80	54 - 2
34130-80520	53 - 16
	54 - 17
34152-70A00	54 - 8
34152-70A50	53 - 7
34152-70A80	53 - 7
	53 - 7
34152-70A90	53 - 7
34152-71A00	54 - 8
	54 - 8
34152-71A10	54 - 8
34152-71A70	53 - 7
34152-71A80	54 - 8
34154-80360	53 - 12
	54 - 13
34160-67010	53 - 13
	53 - 22
	54 - 14
	54 - 23
34165-80250	53 - 14
34165-80380	54 - 15
34173-64010	53 - 8
	54 - 9
34175-78900	53 - 10
	53 - 10
	53 - 10

PART NO.	FIG.NO.-REF.NO.
	53 - 10
	53 - 10
	54 - 11
	54 - 11
	54 - 11
	54 - 11
	54 - 11
34180-82000	53 - 15
	54 - 16
34220-70A00	54 - 3
34320-70A00	54 - 4
34320-70A30	53 - 3
34420-70A00	54 - 5
34420-70A30	53 - 4
34600-50A00	59 - 38
34810-80001	122 - 24
	123 - 25
	124 - 29
34825-67012	122 - 25
	123 - 26
34850-82000	124 - 30
	9 - 27
	10 - 25
34850-83000	59 - 39
34910-80020	53 - 17
34910-80030	54 - 18
	53 - 17
	54 - 18
35121-51032	55 - 1
35121-72600	55 - 8
35121-73040	55 - 8
35121-78400	55 - 8
35121-80000	55 - 1
35129-04030	57 - 22
35131-64031	55 - 2
35132-72600	55 - 12
	55 - 3
	55 - 13
35136-34670	55 - 10
35136-51030	55 - 4
35136-72600	55 - 14
35151-78020	55 - 6
	55 - 16
35154-51030	55 - 7
	55 - 17

PART NO.	FIG.NO.-REF.NO.
35154-77000	55 - 17
35179-72600	55 - 11
35601-80032	56 - 1
35601-80052	56 - 1
35602-80032	56 - 2
35602-80052	56 - 2
35603-80002	57 - 1
35603-80013	57 - 1
35604-80002	57 - 2
35604-80013	57 - 2
35612-78000	56 - 3
35612-79012	56 - 3
35632-78000	56 - 4
35632-79012	56 - 4
35662-80000	57 - 5
35712-80000	57 - 3
35712-80011	57 - 3
35910-80001	57 - 12
35910-80011	57 - 12
36210-79003	59 - 1
36212-79001	59 - 2
36252-80000	57 - 6
36272-80000	57 - 7
36410-70A00	56 - 15
36410-80001	56 - 10
36412-78400	56 - 17
36412-80000	56 - 12
36430-70A00	56 - 16
36430-80001	56 - 11
36570-79000	57 - 17
36572-79000	57 - 19
36573-79000	57 - 20
36580-80001	57 - 23
36580-80301	57 - 23
36610-70A00	58 - 1
36610-70A10	58 - 1
36610-70A20	58 - 5
36610-70A30	58 - 5
	58 - 5
36610-70A50	58 - 5
36610-70A80	58 - 5
36610-70A90	58 - 1
36610-71A20	58 - 5
36610-71A40	58 - 1
36610-74A00	58 - 5

PART NO.	FIG.NO.-REF.NO.
6610-74A10	58 - 1
6610-74A20	58 - 5
6610-74A50	58 - 1
6610-74A60	58 - 1
6620-70A00	58 - 13
6620-70A10	58 - 13
6620-70A20	58 - 13
	58 - 13
	58 - 13
	58 - 13
6620-70A40	58 - 13
6620-70A60	58 - 13
	58 - 13
6620-70A70	58 - 13
6620-70A80	58 - 13
6620-70A90	58 - 13
6620-74A00	58 - 13
6620-74A10	58 - 13
	58 - 13
6620-74A30	58 - 13
6620-74A40	58 - 13
6620-74A50	58 - 13
6620-74A60	58 - 13
	58 - 13
6620-74A90	58 - 13
6620-75A00	58 - 13
6620-75A10	58 - 13
6625-83000	58 - 15
6717-80011	58 - 6
6717-80021	58 - 2
6740-80000	52 - 4
	52 - 4
6748-80000	49 - 42
6748-83010	49 - 42
6820-80001	59 - 5
6820-80010	59 - 4
6821-80000	58 - 25
6821-83000	58 - 32
6822-80001	58 - 28
6823-80000	59 - 17
6830-80000	58 - 12
6845-83003	58 - 55
6846-83400	58 - 56
6850-79500	59 - 16
6855-60A00	58 - 42
36855-60A10	58 - 42
36890-66700	58 - 43
	58 - 48
36890-83000	58 - 48
36890-83010	58 - 49
36891-66700	58 - 44
36891-83010	58 - 49
36930-82000	58 - 50
	62 - 9
37100-73303	59 - 7
37145-70010	59 - 9
37145-73302	59 - 10
37152-66010	59 - 8
37280-50A00	59 - 28
37370-50A00	59 - 45
37400-80410	59 - 31
37400-80420	59 - 31
37400-80510	59 - 31
37400-80520	59 - 31
37495-80000	59 - 33
37610-83000	39 - 9
37620-80000	46 - 27
37670-80001	59 - 29
37710-83000	39 - 12
37740-60A00	59 - 11
37820-82001	3 - 13
37830-71500	59 - 13
37860-50A00	59 - 27
37870-80000	59 - 21
37930-83000	63 - 1
37940-80000	59 - 15
38101-80001	60 - 1
	61 - 1
38101-80020	60 - 1
	61 - 1
38102-70A00	60 - 4
	61 - 4
38102-80031	60 - 4
	61 - 4
38255-80000	60 - 3
	61 - 3
38271-71310	60 - 6
	61 - 6
38272-71310	60 - 7
	61 - 7
38274-78000	60 - 5
	61 - 5
38274-83400	62 - 2
38278-67011	60 - 8
	61 - 8
38310-70A00	60 - 9
	61 - 9
38310-70A10	60 - 9
38310-80040	60 - 10
	61 - 10
38330-70A00	60 - 10
	61 - 10
38330-70A10	60 - 10
38330-80040	60 - 9
	61 - 9
38340-63641	60 - 11
	61 - 11
38340-70A00	60 - 13
	61 - 11
38340-70A10	60 - 15
38340-83400	62 - 5
38346-67700	60 - 14
	61 - 12
38346-80020	60 - 12
	60 - 16
	61 - 12
38346-83400	62 - 6
38410-66113	60 - 23
	61 - 19
38410-86000	61 - 20
38450-80000	60 - 18
38450-83000	61 - 14
38452-80000	60 - 19
	61 - 15
38453-75000	60 - 20
	61 - 16
38480-80000	60 - 17
	61 - 13
	62 - 8
38490-80010	60 - 22
	61 - 18
38493-83000	61 - 22
38496-66010	61 - 23
38500-80010	58 - 29
38500-82200	58 - 29

PART NO.	FIG.NO.-REF.NO.
38610-50A00	59 - 23
38630-80000	63 - 2
38660-82100	59 - 34
38660-82200	59 - 46
38667-83000	59 - 37
38811-83402	62 - 1
38821-83400	62 - 4
38837-79500	60 - 24
	61 - 21
38850-83020	59 - 43
38860-60A00	142 - 22
39100-74A00	58 - 39
39100-74A10	58 - 39
39100-74A20	58 - 39
39100-74A30	58 - 39
39100-74A40	58 - 39
39100-74A50	58 - 39
39100-74A60	58 - 39
39100-74A70	58 - 39
39100-74A80	58 - 39
39102-70A00	58 - 41
39102-80000	58 - 41
39110-80000	63 - 5
39120-80000	63 - 7
39131-80000	63 - 8
39135-80000	63 - 14
39137-80001	63 - 9
39141-85000	63 - 13
39142-80000	63 - 15
39143-80000	63 - 16
39250-78300	58 - 40
39312-83000	58 - 37
39312-83010	58 - 38
39400-83810	59 - 24
39471-78001	59 - 25
41110-70A00	64 - 1
41117-70A00	64 - 2
41118-70A00	64 - 3
	67 - 4
41230-70A00	64 - 7
41240-70A00	64 - 8
41310-70A10	67 - 1
	67 - 2
41310-70A20	67 - 3
41331-62020	64 - 20
41411-83000	64 - 11
	67 - 8
41411-83010	64 - 9
41411-83020	64 - 10
41430-83000	67 - 6
41440-83000	67 - 7
41461-77300	64 - 15
41461-83300	67 - 16
41462-77300	64 - 16
	67 - 17
41463-82000	64 - 17
	67 - 18
41600-70A00	64 - 25
41681-58010	74 - 27
	75 - 27
41700-70A00	67 - 21
42110-80010	64 - 4
42150-83000	67 - 5
42300-70A00	65 - 1
42400-83001	65 - 2
42412-70A00	65 - 4
42415-83000	65 - 3
43110-70A00	70 - 1
43110-70A10	70 - 1
43110-83310	70 - 1
43110-83320	70 - 1
43130-75150	70 - 2
43130-78030	70 - 2
43210-70A00-019	70 - 3
43210-70A00-26U	70 - 3
43210-70A10	70 - 3
43210-80000-019	70 - 4
43210-80000-26U	70 - 4
43231-83000	70 - 7
43232-83000	70 - 7
43233-83000	70 - 7
43234-83000	70 - 7
43235-83000	70 - 7
43236-83000	70 - 7
43241-80001	66 - 17
43252-80000	70 - 8
	70 - 11
43261-80000	70 - 13
43271-80000	70 - 10
43421-80001	66 - 7
43440-80003	66 - 5
43445-80012	66 - 6
43461-80000	66 - 12
43465-80000	66 - 11
43466-80000	66 - 13
43471-80001	66 - 14
43485-73000	68 - 5
43500-83810	68 - 11
43521-83003	68 - 13
43588-73000	68 - 7
43801-80010	66 - 30
43801-83000	66 - 36
43813-80000	66 - 31
43814-80010	66 - 32
43841-80001	66 - 33
43842-80001	66 - 34
44101-83300	66 - 1
44102-83300	66 - 2
44131-73001	68 - 4
44210-83300	68 - 1
44220-83300	68 - 2
45111-80001	66 - 18
45151-80001	66 - 19
45610-63001	66 - 20
45621-63000	66 - 21
45622-63000	66 - 21
45623-80000	66 - 25
45624-63001	66 - 27
45625-63001	66 - 28
45626-83000	66 - 29
46480-83003	69 - 1
46510-70A00	69 - 2
46510-70A10	69 - 2
46541-52002	69 - 6
46542-52000	69 - 8
46551-83070	69 - 3
48110-70A00-5CW	71 - 1
48110-70A00-5ES	71 - 1
48121-70A00-5CW	71 - 5
48121-70A00-5ES	71 - 5

40000

PART NO.	FIG.NO.-REF.NO.
48128-80030	71 - 4
48130-70A00	71 - 2
48131-80030	71 - 6
48133-70A00	71 - 3
48200-80210	73 - 1
48200-80220	73 - 1
48200-83010	72 - 1
48220-80100	72 - 13
48220-80120	73 - 11
48220-80130	73 - 11
48230-80110	73 - 12
48230-80120	72 - 14
	73 - 12
48251-52000	72 - 17
	73 - 15
48262-58001	72 - 25
	73 - 23
48270-80010	72 - 22
	73 - 20
48281-85000	72 - 26
	73 - 24
48411-80251-5CW	72 - 7
	73 - 5
48411-80251-5ES	72 - 7
	73 - 5
48411-80351-5CW	72 - 7
	73 - 5
48411-80351-5ES	72 - 7
	73 - 5
48419-75000	72 - 9
	73 - 7
48421-80200-5CW	72 - 8
	73 - 6
48421-80200-5ES	72 - 8
	73 - 6
48421-80300-5CW	72 - 8
	73 - 6
48421-80300-5ES	72 - 8
	73 - 6
48491-80000	72 - 5
	73 - 3
528-80000	73 - 25
00-80022	75 - 1
0-80090	74 - 1
3-67011	74 - 5

PART NO.	FIG.NO.-REF.NO.
48633-67040	75 - 5
48644-80010	75 - 3
48671-80011	75 - 2
48671-80060	74 - 2
48674-63240	74 - 4
	75 - 4
48730-80012	74 - 26
	75 - 26
48741-80000	75 - 28
48741-80060	74 - 28
48806-80000	74 - 11
	74 - 16
	74 - 20
	75 - 11
	75 - 16
	75 - 20
48810-60A00	74 - 15
	75 - 15
48836-70A00	74 - 18
	75 - 18
48837-70A00	74 - 22
	75 - 22
48838-70A00	74 - 23
	75 - 23
48870-70A02	75 - 19
48870-70A61	74 - 19
48900-70A01	75 - 10
48900-70A60	74 - 10
49410-83000	77 - 1
49410-83011	76 - 1
49511-80100	77 - 7
49511-80110	76 - 6
49610-80100	77 - 18
49610-80110	76 - 14
49710-70A10	76 - 9
49710-83000	77 - 10
49710-83010	76 - 9
49751-79001	76 - 15
	76 - 18
	77 - 19
	77 - 23
49810-70A10	76 - 17
49810-80100	77 - 22
49810-80110	76 - 17
49821-80110	76 - 19

PART NO.	FIG.NO.-REF.NO.
51010-83000	78 - 30
51010-83020	78 - 31
51010-83110	79 - 30
51010-83200	78 - 30
51100-70A00	78 - 1
	79 - 1
51100-83270	78 - 1
	79 - 1
51100-83810	78 - 2
	79 - 2
51132-82002	78 - 32
	79 - 31
51162-82020	78 - 3
	79 - 3
51165-82020	78 - 4
	79 - 4
51166-67020	78 - 5
	79 - 5
51182-82020	78 - 15
	79 - 15
51183-82020	78 - 6
	79 - 6
51184-82020	78 - 7
	79 - 7
51185-82020	78 - 8
	79 - 8
51193-82020	78 - 9
	79 - 9
51197-82020	78 - 10
	79 - 10
51199-82020	78 - 16
	79 - 16
51211-83020	78 - 11
	79 - 12
51220-70A00	78 - 13
	79 - 13
51234-83020	78 - 12
	79 - 11
51235-82120	78 - 14
	79 - 14

50000

PART NO.	FIG.NO.-REF.NO.
51300-83070	79 - 17
51300-83170	78 - 17
51300-83810	78 - 18
51300-83820	79 - 18
51313-82020	78 - 26
	79 - 26
51330-82020	78 - 19
	79 - 19
51340-70A00	80 - 12
	81 - 14
51348-82020	78 - 27
	79 - 27
51349-82020	78 - 28
	79 - 28
51350-83020	78 - 20
	79 - 22
51360-70A00	80 - 13
51360-70A10	81 - 15
51360-83121	78 - 21
	79 - 23
51363-83170	78 - 22
	79 - 24
51364-83021	78 - 23
	79 - 25
51370-83020	79 - 20
51370-83120	78 - 24
51371-82020	78 - 25
	79 - 21
51372-83020	79 - 29
51372-83120	78 - 29
51380-70A00	78 - 37
51401-83000	80 - 14
	81 - 16
51402-83000	80 - 15
	81 - 17
51410-83000	80 - 1
	81 - 1
51410-83100	80 - 1
	80 - 1
	81 - 1
51420-70A00	80 - 5
	81 - 7
51430-70A00	80 - 6
	81 - 8
51460-70A00	80 - 11

PART NO.	FIG.NO.-REF.NO.
	81 - 13
51470-70A00	80 - 18
	81 - 19
51480-70A00	80 - 19
	81 - 20
51520-83000	80 - 20
	81 - 21
51520-83100	80 - 20
	80 - 20
	81 - 21
51540-80151	80 - 7
	81 - 9
51560-83031	80 - 17
	81 - 18
51570-70A30	80 - 2
	81 - 2
51650-83040	80 - 31
	81 - 5
51712-83001	80 - 3
	81 - 3
51755-67000	81 - 22
51920-70A00	80 - 27
51920-70A10	81 - 27
51950-70A00	80 - 29
	81 - 29
52241-85400	83 - 8
52243-79241	83 - 9
52400-80820	83 - 12
52473-60020	82 - 14
52473-83040	83 - 13
52474-60020	82 - 15
52474-85200	83 - 14
53110-83300	83 - 1
53160-83300	83 - 2
53201-70A00	83 - 4
53201-83310	83 - 4
53202-70A00	83 - 5
53202-83310	83 - 5
53231-83041	83 - 7
53331-80050	83 - 6
53401-83310	83 - 10
53402-83300	83 - 11
53711-83300	83 - 21
53712-83300	83 - 22
53713-83300	83 - 23

PART NO.	FIG.NO.-REF.NO.
53714-83300	83 - 24
53810-83300	83 - 17
53821-83300	83 - 19
53822-83300	83 - 20
53860-83300	83 - 18
54100-70A00	84 - 1
54100-70A10	84 - 1
54100-70A20	84 - 1
54100-83310	84 - 1
54112-83310	84 - 2
54161-83300	84 - 5
54640-70A00	84 - 8
54640-70A10	84 - 8
54660-83310	84 - 15
54681-83300	84 - 12
54681-83600	84 - 12
54682-83300	84 - 9
54683-83300	84 - 7
54691-83300	84 - 16
55100-70A00	82 - 1
55100-70A30	82 - 1
55100-82810	82 - 5
55100-82820	82 - 6
55110-70A00	82 - 3
55110-80020	82 - 3
55115-80000	82 - 4
55161-80000	82 - 2
55191-80000	82 - 12
55196-80002	82 - 11
55201-80001	82 - 13
55206-80000	82 - 10
55211-80000	82 - 21
55221-80000	82 - 22
55233-80000	82 - 7
55234-80001	82 - 8
55235-80001	82 - 9
55311-80000	82 - 18
57000-70A10	85 - 1
57000-70A60	85 - 1
57000-74A10	86 - 1
57000-74A50	86 - 1
57151-73003	85 - 18
	86 - 41
57211-80000	85 - 2
	86 - 2

RT NO.	FIG.NO.-REF.NO.
270-83011	85 - 7
	86 - 7
270-83021	85 - 7
	86 - 7
280-80020	85 - 10
	86 - 10
310-83000	85 - 11
	86 - 11
320-83000	85 - 12
	86 - 12
'321-52001	85 - 25
	86 - 22
'461-80001	85 - 3
	86 - 3
7471-80001	85 - 4
	86 - 4
7551-83000	85 - 8
	86 - 8
7600-80813	92 - 28
7600-80851	91 - 10
7680-83001	85 - 9
	86 - 9
7710-83301	85 - 5
	86 - 5
7720-83301	85 - 6
	86 - 6
58100-70A02	87 - 1
58200-83002	87 - 2
58300-83001	88 - 1
58300-83100	88 - 1
58370-83000	88 - 2
58380-80000	88 - 7
58410-80010	88 - 3
58600-70A00	87 - 3
58600-70A10	87 - 3
58622-83002	87 - 4
58723-83001	87 - 9
58726-83001	87 - 6
58763-83001	87 - 5
58771-80001	87 - 12
58800-70A00	87 - 7
58800-70A10	87 - 7
58822-83002	87 - 8
58923-83001	87 - 10
58971-80001	87 - 13

PART NO.	FIG.NO.-REF.NO.
59101-80004	85 - 7
59101-80024	86 - 7
59300-80102	85 - 7
59300-80142	86 - 7
59300-83001	85 - 10
59600-83001	86 - 10
59600-83011	85 - 11
59600-83121	86 - 11
59600-83131	85 - 12
	86 - 12
61100-83021	86 - 4
61100-83040	85 - 8
61100-83070	86 - 8
61100-83090	92 - 28
61100-83310	85 - 9
61400-83020	86 - 9
61400-83040	85 - 5
61450-80001	86 - 5
61490-80001	85 - 6
61490-80302	86 - 6
61492-80000	87 - 1
	87 - 2
	88 - 1
	88 - 1
61500-83010	88 - 2
61500-83020	88 - 7
61550-80001	88 - 3
61590-80001	87 - 3
61590-80302	87 - 4
61600-70A00	87 - 9
61600-70A10	87 - 6
61600-70A20	87 - 5
61600-70A50	87 - 12
61810-83030	87 - 7
61810-83040	87 - 7
61820-83000	87 - 8
61820-83010	87 - 10
	87 - 13

PART NO.	FIG.NO.-REF.NO.
62110-83350	89 - 1
62110-83360	89 - 1
62110-83370	90 - 4
62110-83380	90 - 4
	90 - 3
62110-83400	90 - 1
62110-83410	90 - 1
62110-83420	90 - 2
62111-80001	90 - 2
62111-83020	
62111-83090	
62112-80000	
62113-80000	
62114-83001	
62115-80070	
62120-80321	90 - 5
62120-83290	90 - 5
62120-83301	90 - 5
62130-80321	90 - 5
62130-83290	90 - 5
62140-80300	90 - 5
62140-83290	90 - 6
62150-83290	90 - 6
62160-83210	90 - 21
62180-83200	94 - 15
62180-83211	96 - 14
62191-83210	95 - 13
62192-83210	94 - 63
62210-80002	95 - 36
	96 - 43
62212-80000	90 - 7
	90 - 7
62311-80002	90 - 20
	94 - 16
62500-70A00	96 - 15
62500-70A10	95 - 14
62500-70A20	90 - 8
62500-70A30	90 - 8
62500-80310	90 - 8
63110-70A00	90 - 8
	90 - 9
	90 - 9
63121-80100	90 - 10
63131-80140	90 - 10
63210-80121	90 - 10

PART NO.	FIG.NO.-REF.NO.
	90 - 10
	92 - 1
	92 - 1
	92 - 1
	92 - 1
	92 - 1
	92 - 1
	91 - 1
	91 - 1
	91 - 1
	91 - 2
	91 - 3
	91 - 33
	91 - 32
	92 - 3
	92 - 3
	91 - 5
	92 - 4
	92 - 4
	92 - 5
	92 - 5
	92 - 6
	92 - 7
	92 - 8
	92 - 8
	92 - 12
	92 - 13
	91 - 6
	92 - 9
	91 - 8
	92 - 11
	91 - 7
	92 - 10
	91 - 9
	91 - 9
	91 - 9
	92 - 14
	94 - 1
	95 - 1
	96 - 1
	96 - 3
	96 - 5
	96 - 7

PART NO.	FIG.NO.-REF.NO.
63210-80141	96 - 7
63210-80151	96 - 7
63210-80400	96 - 7
	96 - 7
	96 - 7
63210-80420	96 - 7
63210-80430	96 - 7
63230-80001	94 - 3
63230-80041	94 - 3
63230-80320	95 - 3
63231-80112	96 - 9
63231-80152	96 - 9
63233-80001	96 - 11
63310-80001	94 - 7
	110 - 53
63310-80101	96 - 12
63310-83550	95 - 5
63461-80000	52 - 13
63510-70A00	94 - 2
	95 - 2
	96 - 2
63521-80110	96 - 4
63531-80100	96 - 6
63610-80131	96 - 8
63610-80141	96 - 8
63610-80171	96 - 8
63610-80400	96 - 8
	96 - 8
	96 - 8
63610-80420	96 - 8
63610-80430	96 - 8
63630-80001	94 - 4
63630-80041	94 - 4
63630-80320	95 - 4
63631-80112	96 - 10
63631-80152	96 - 10
63710-80001	94 - 8
	110 - 54
63710-80101	96 - 13
63710-83550	95 - 6
64110-80030	94 - 9
	95 - 7
64110-80180	96 - 16
64116-80001	94 - 13
	95 - 9

PART NO.	FIG.NO.-REF.NO.
64120-80011	94 - 11
	95 - 11
64131-80100	96 - 18
64132-80100	96 - 20
64141-80112	96 - 22
64141-80122	96 - 22
64150-83000	94 - 17
	96 - 24
64150-83300	95 - 15
64153-80300	95 - 17
64200-70A00	94 - 19
64200-70A20	94 - 20
64200-70A40	94 - 20
64200-70A50	94 - 19
	94 - 20
64200-70A60	94 - 19
64200-70A70	94 - 19
64200-71A00	96 - 26
64200-71A20	96 - 27
64200-71A30	96 - 27
64200-71A80	96 - 27
64200-74A00	95 - 19
64200-74A10	95 - 19
64200-74A20	95 - 19
64216-80140	96 - 42
64217-80130	96 - 32
64230-80002	94 - 25
64230-80502	94 - 25
	110 - 51
64230-83560	95 - 24
64235-80001	94 - 27
	95 - 26
64240-83002	94 - 21
	95 - 20
	96 - 28
64310-80100	96 - 37
64311-80001	94 - 29
	110 - 55
64311-83550	95 - 28
64351-80101	97 - 1
64510-80030	94 - 10
	95 - 8
64510-80180	96 - 17
64516-80001	94 - 14
	95 - 10

PART NO.	FIG.NO.-REF.NO.
64520-80011	94 - 12
	95 - 12
64531-80100	96 - 19
64532-80100	96 - 21
64541-80112	96 - 23
64541-80122	96 - 23
64550-83000	94 - 18
	96 - 25
64550-83300	95 - 16
64553-80300	95 - 18
64600-70A10	94 - 23
64600-83001	94 - 23
64600-83100	96 - 30
64600-83300	95 - 22
64617-80130	96 - 33
64630-80002	94 - 26
64630-80502	94 - 26
	110 - 52
64630-83561	95 - 25
64635-80001	94 - 28
	95 - 27
64640-83002	94 - 24
	95 - 23
	96 - 31
64710-80001	94 - 30
	110 - 56
64710-80100	96 - 38
64710-83550	95 - 29
64751-80101	97 - 2
65110-83600	97 - 13
65111-80103	97 - 3
65120-80101	97 - 4
65120-83101	97 - 14
65130-80100	97 - 5
65134-80100	97 - 6
65135-80100	97 - 7
65141-80110	97 - 8
65241-80101	97 - 9
65710-80301	94 - 34
	98 - 1
65710-80400	98 - 1
65730-80303	94 - 38
	98 - 6
65730-83001	98 - 6
65750-80301	94 - 35

PART NO.	FIG.NO.-REF.NO.
65750-80301	98 - 2
65750-80400	98 - 2
65770-83011	94 - 35
	98 - 4
65775-80010	94 - 42
	98 - 9
65780-83011	94 - 37
	98 - 5
65785-80010	94 - 43
	98 - 10
65791-83000	112 - 16
65951-80000	87 - 27
65952-80000	87 - 28
65953-83000	87 - 29
65954-83000	87 - 30
67627-70000	58 - 47
	90 - 16
	90 - 17
	90 - 19
	91 - 36
	110 - 74
	141 - 19
67700-80060	93 - 1
67700-80360	93 - 1
67700-83020	93 - 1
	93 - 1
67700-83300	93 - 1
67790-80033	93 - 2
67790-83000	112 - 36
67796-83000	112 - 37
68001-80123	117 - 1
68001-80133	117 - 1
68002-80123	117 - 2
68002-80133	117 - 2
69100-83501	120 - 1
69100-83511	120 - 1
69170-79501	111 - 32
69175-79502	111 - 34
69176-79500	111 - 36
69180-79501	111 - 33
69185-79502	111 - 35
69275-78200	104 - 1
69310-80110	117 - 3
69320-80110	117 - 5
69340-80110	117 - 4
69350-80110	117 - 6
69510-80111	120 - 2
69520-80111	120 - 3
71411-83000	85 - 13
	86 - 13
71420-83000	85 - 36
	86 - 33
71430-83000	85 - 37
	86 - 34
71441-83002	85 - 15
	86 - 15
71471-83300	85 - 44
71472-80030	85 - 45
71473-80030	85 - 46
71481-80030	85 - 18
	86 - 42
71491-80000	85 - 21
	86 - 18
71492-80010	85 - 25
	86 - 22
71493-83001	85 - 22
	86 - 19
71494-80001	85 - 23
	86 - 20
71494-80201	85 - 24
	86 - 21
71610-83000	85 - 32
	86 - 29
71620-83000	85 - 33
	86 - 30
71631-83000	85 - 34
	86 - 31
71632-83000	85 - 35
	86 - 32
71710-70A10-162	87 - 21
71710-83301-162	87 - 21
71741-83301	87 - 22
71742-83301	87 - 23
71810-83301-162	91 - 14
	92 - 15
71821-80300	91 - 25
	92 - 24
71822-80300	91 - 26
	92 - 25
71823-83301	91 - 27
71824-83300	91 - 28
71825-83300	91 - 29
71831-83301	91 - 15
71831-83310	92 - 16
71832-83301	91 - 16
71832-83310	92 - 17
71833-70A10	91 - 17
	92 - 18
72111-70A00-2DE	87 - 32
72111-70A00-2DF	87 - 32
72111-70A00-2DG	87 - 32
72111-70A00-2DH	87 - 32
72111-70A00-2DJ	87 - 32
72111-70A00-2DK	87 - 32
72111-70A00-2DL	87 - 32
72111-70A00-2DM	87 - 32
72111-70A00-2JS	87 - 32
72111-70A00-7HS	87 - 32
72111-70A00-8KJ	87 - 32
72115-70A00	87 - 33
72272-80000	91 - 13
72310-70A00	99 - 7
72310-70A20	99 - 7
72310-70A30	99 - 7
72321-80001	99 - 11
72322-83000	99 - 9
72411-70A00	87 - 38
72411-80000	89 - 2
72412-80000	89 - 3
72413-83000	89 - 7
72414-80000	89 - 8
72415-80000	89 - 5
72416-83000	89 - 39
72418-80003	89 - 13
72419-83010	89 - 40
72420-80010	89 - 17
72430-80002	99 - 4
72441-80002	87 - 52

PART NO.	FIG.NO.-REF.NO.
72442-83002	88 - 10
72450-80001	89 - 36
72461-80000	89 - 16
72462-83000	89 - 41
72464-80060	88 - 13
72511-78000	52 - 11
72521-80001	52 - 12
72525-80001	52 - 9
72810-80022	106 - 1
	106 - 1
72810-83002	106 - 1
72850-80002	93 - 4
72875-80003	93 - 6
72876-80000	91 - 34
	92 - 33
72880-80011-7BS	106 - 17
72890-80301	93 - 29
73111-70A01-5CW	99 - 1
73111-70A01-5ES	99 - 1
73111-70A11-5CW	99 - 1
73111-70A11-5ES	99 - 1
73210-70A00-281	101 - 1
73220-70A00-281	101 - 2
73221-70A00	101 - 21
73230-70A00-281	101 - 3
73411-70A00-5CW	100 - 1
73411-70A00-5ES	100 - 1
73451-70A00-5CW	100 - 2
73451-70A00-5ES	100 - 2
73451-70A10-5CW	100 - 2
73451-70A10-5ES	100 - 2
73610-83001	101 - 4
73610-83021	101 - 4
73610-83031	101 - 4
73610-83040	101 - 4
73613-83000	101 - 5
73621-80000	101 - 20
73641-83010	101 - 6
73642-83010	101 - 7
73650-83001	101 - 9
73660-83001	101 - 10
73671-83000-281	101 - 12
73675-83020-281	101 - 22
73722-63001	91 - 4
	92 - 2
73810-83000	99 - 12
73810-83020	99 - 12
73810-83030	99 - 12
73811-70A00-5CW	99 - 14
73811-70A00-5ES	99 - 14
73812-70A01-5CW	99 - 15
73812-70A01-5ES	99 - 15
73813-83000-5CW	99 - 19
73813-83000-5ES	99 - 19
73813-83010-5CW	99 - 19
73813-83010-5ES	99 - 19
73815-70A00	99 - 17
73821-70A11-5CW	99 - 16
73821-70A11-5ES	99 - 16
73823-70A10-281	100 - 8
73824-83000	100 - 22
73825-70A00	99 - 24
73831-70A01-5CW	99 - 16
73831-70A01-5ES	99 - 16
73833-70A00-281	100 - 8
73841-70A00-281	100 - 23
73842-70A00-281	100 - 24
73843-70A01-281	100 - 25
73850-70A00-281	100 - 16
73851-70A41	100 - 16
73851-70A51	100 - 16
73851-70A60	100 - 16
73851-70A70	100 - 16
73855-83000	100 - 17
73856-82000	100 - 18
73857-70A00	100 - 19
73900-80832	100 - 11
73951-70A00	100 - 13
73953-80000	110 - 57
74100-70A00	102 - 1
74100-70A20	102 - 1
74111-83003	102 - 2
74111-83023	102 - 2
74112-83003	102 - 3
74112-83022	102 - 3
74113-83000	102 - 19
74114-83001	102 - 31
74115-70A00	102 - 23
74116-70A00	102 - 29
74118-83000	102 - 28
74119-83000	102 - 32
74119-83020	102 - 32
74120-83020	102 - 4
74130-83000	102 - 13
74140-83000	102 - 6
74151-85000	102 - 33
74161-70A00	102 - 27
74162-70A00	102 - 20
74163-70A00	102 - 26
74164-70A00	102 - 30
74165-83000	102 - 16
74171-80000	102 - 18
74172-80000	102 - 36
74175-80000	102 - 14
74181-70A00	102 - 24
74182-84100	102 - 34
74190-83020	102 - 10
74191-70A00	102 - 25
74250-83000	101 - 13
74250-83020	101 - 13
74259-83000	101 - 14
74400-70A00	102 - 39
74417-70A00-281	102 - 40
74512-83000	102 - 41
74512-83020	102 - 41
74513-70A20	102 - 42
74513-70A40	102 - 42
74513-83000	102 - 42
74514-83000	102 - 43
74611-70A00	101 - 16
74611-70A10	101 - 16
74612-70A00	101 - 17
74614-83000	101 - 18
74615-70A00	101 - 19
74621-83040	101 - 23
74710-83000	30 - 23
74710-83020	29 - 23
74812-80000	29 - 22
	30 - 22
74812-83001	29 - 22
	30 - 22
75101-80701-5JR	114 - 7
	116 - 6
75101-80701-5JS	116 - 6
75101-83051-5JR	116 - 6

PART NO.	FIG.NO.-REF.NO.
75101-83051-5JS	116 - 6
75101-83062-5JR	114 - 7
75101-83062-5JS	114 - 7
75101-83082-5JR	114 - 7
75101-83082-5JS	114 - 7
75101-83091-5JR	114 - 7
75101-83091-5JS	114 - 7
75101-83101-5JR	116 - 6
75101-83101-5JS	116 - 6
75110-83000-5GP	113 - 1
	115 - 1
75110-83000-5JP	113 - 1
	115 - 1
75110-83021-5GP	114 - 1
	116 - 1
75110-83021-5JP	114 - 1
	116 - 1
75110-83040-5GP	113 - 1
	115 - 1
75110-83040-5JP	113 - 1
	115 - 1
75110-83051-5GP	114 - 1
	116 - 1
75110-83051-5JP	114 - 1
	116 - 1
75120-83010-5GP	113 - 2
	115 - 2
75120-83010-5JP	113 - 2
	115 - 2
75120-83031-5GP	114 - 2
	116 - 2
75120-83031-5JP	114 - 2
	116 - 2
75120-83040-5GP	113 - 2
	115 - 2
75120-83040-5JP	113 - 2
	115 - 2
75120-83051-5GP	114 - 2
	116 - 2
75120-83051-5JP	114 - 2
	116 - 2
75130-83010-5GP	113 - 5
	115 - 3
75130-83010-5JP	113 - 5
	115 - 3
75130-83071-5GP	114 - 4
75130-83071-5JP	114 - 4
75130-83090-5GP	113 - 5
75130-83090-5JP	113 - 5
75130-83181-5GP	114 - 4
	116 - 4
75130-83181-5JP	114 - 4
	116 - 4
75130-83190-5GP	113 - 5
	115 - 3
75130-83190-5JP	113 - 5
	115 - 3
75130-83200-5GP	113 - 5
75130-83200-5JP	113 - 5
75130-83221-5JR	114 - 8
75130-83221-5JS	114 - 8
75140-83020-5GP	113 - 6
	115 - 4
75140-83020-5JP	113 - 6
	115 - 4
75140-83061-5GP	114 - 5
	116 - 5
75140-83061-5JP	114 - 5
	116 - 5
75140-83100-5GP	113 - 6
75140-83100-5JP	113 - 6
75140-83111-5JR	114 - 9
75140-83111-5JS	114 - 9
75140-83160-5GP	113 - 6
	115 - 4
75140-83160-5JP	113 - 6
	115 - 4
75140-83170-5GP	113 - 6
75140-83170-5JP	113 - 6
75140-83181-5GP	114 - 5
75140-83181-5JP	114 - 5
75150-83010-5GP	113 - 8
	115 - 6
75150-83010-5JP	113 - 8
	115 - 6
75150-83020-5GP	113 - 8
	115 - 6
75150-83020-5JP	113 - 8
	115 - 6
75150-83030-5GP	114 - 6
	116 - 6
75150-83030-5JP	114 - 6
	116 - 6
75150-83040-5GP	114 - 6
	116 - 6
75150-83040-5JP	114 - 6
	116 - 6
75150-83080-5GP	114 - 6
	116 - 6
75150-83080-5JP	114 - 6
	116 - 6
75150-83150-5GP	115 - 6
75150-83150-5JP	115 - 6
75150-83180-5GP	113 - 8
75150-83180-5JP	113 - 8
75150-83190-5GP	113 - 8
75150-83190-5JP	113 - 8
75150-83220-5GP	113 - 8
75150-83220-5JP	113 - 8
75150-83230-5GP	113 - 8
75150-83230-5JP	113 - 8
75150-83261-5JR	114 - 3
	116 - 3
75150-83261-5JS	116 - 3
75150-83281-5JR	116 - 3
75150-83281-5JS	116 - 3
75150-83291-5JR	114 - 3
75150-83291-5JS	114 - 3
75150-83301-5JR	114 - 3
75150-83301-5JS	114 - 3
75170-80201-5JR	116 - 7
75170-80201-5JS	116 - 7
75170-80231-5JR	116 - 7
75170-80231-5JS	116 - 7
75170-80241-5JR	116 - 7
75170-80241-5JS	116 - 7
75170-80261-5JR	116 - 7
75170-80261-5JS	116 - 7
75170-80271-5JR	116 - 7
75170-80271-5JS	116 - 7
75170-80400-5GP	113 - 7
75170-80400-5JP	113 - 7
75170-80410-5GP	113 - 7
75170-80410-5JP	113 - 7
75170-80460-5GP	115 - 5

PART NO.	FIG.NO.-REF.NO.
75170-80460-5JP	115 - 5
75170-80470-5GP	115 - 5
75170-80470-5JP	115 - 5
75170-80511-5JR	114 - 10
75170-80531-5JR	114 - 10
75170-83651-5GP	114 - 10
75170-83651-5JP	114 - 10
75170-83661-5GP	114 - 10
75170-83661-5JP	114 - 10
75170-83671-5GP	114 - 10
75170-83671-5JP	114 - 10
75170-83681-5GP	114 - 10
75170-83681-5JP	114 - 10
75170-83690-5GP	113 - 7
75170-83690-5JP	113 - 7
75170-83700-5GP	113 - 7
75170-83700-5JP	113 - 7
75170-83711-5JR	114 - 10
75170-83711-5JS	114 - 10
75170-83721-5JR	114 - 10
75170-83721-5JS	114 - 10
75170-83731-5JR	114 - 10
75170-83731-5JS	114 - 10
75170-83741-5JR	114 - 10
75170-83741-5JS	114 - 10
75170-83771-5GP	116 - 7
75170-83771-5JP	116 - 7
75170-83781-5GP	116 - 7
75170-83781-5JP	116 - 7
75211-83000-281	113 - 11
	114 - 16
	115 - 8
	116 - 13
75211-83010-281	113 - 11
	114 - 15
	115 - 8
	116 - 12
75221-83000-281	113 - 12
	114 - 18
	115 - 9
	116 - 15
75221-83010-281	113 - 12
	114 - 17
	115 - 9
	116 - 14
75231-80000	113 - 16
	114 - 22
	115 - 11
	116 - 17
75240-83001	113 - 13
75240-83011	113 - 13
	114 - 19
75250-83001	113 - 14
	114 - 20
75260-83001	113 - 14
	114 - 20
75411-83000	85 - 41
	86 - 38
75421-80300	86 - 45
75431-80300	86 - 47
75511-83022-48B	114 - 23
	116 - 18
75511-83031-48B	113 - 3
	114 - 23
	115 - 12
	116 - 18
75521-83002-48B	113 - 4
	114 - 24
	115 - 13
	116 - 19
75521-83051-48B	114 - 24
	116 - 19
75530-83003-5GP	114 - 11
75530-83003-5JP	114 - 11
75530-83011-5JR	114 - 11
75530-83021-5JR	114 - 11
75530-83021-5JS	114 - 11
75530-83031-5GP	116 - 8
75530-83031-5JP	116 - 8
75530-83041-5JR	116 - 8
75530-83041-5JS	116 - 8
75540-83003-5GP	114 - 12
75540-83003-5JP	114 - 12
75540-83011-5JR	114 - 12
75540-83021-5JR	114 - 12
75540-83021-5JS	114 - 12
75540-83031-5GP	116 - 9
75540-83031-5JP	116 - 9
75540-83041-5JR	116 - 9
75540-83041-5JS	116 - 9
75610-83020	100 - 20
75610-83030	100 - 20
76110-71A00-2AS	105 - 7
76110-71A00-2AU	105 - 7
76110-71A10-5GR	105 - 7
76110-71A10-5GT	105 - 7
76110-80100-5GR	105 - 7
76110-80100-5GT	105 - 7
76110-83000-5GR	105 - 7
76110-83000-5GT	105 - 7
76110-83020-5GR	105 - 7
76110-83020-5GT	105 - 7
76120-71A10-2AS	105 - 8
76120-71A10-2AU	105 - 8
76120-71A10-5GR	105 - 8
76120-71A10-5GT	105 - 8
76120-80100-5GR	105 - 8
76120-80100-5GT	105 - 8
76120-83000-5GR	105 - 8
76120-83000-5GT	105 - 8
76120-83020-5GR	105 - 8
76120-83020-5GT	105 - 8
76131-83000	105 - 9
	105 - 9
	112 - 48
76140-83000-5GR	93 - 32
76140-83000-5GT	93 - 32
76182-58002	117 - 11
76182-63101	117 - 9
76411-80000	100 - 31
76412-80300	94 - 5
	95 - 33
76421-80001	107 - 24
77130-83812-07B	87 - 48
	94 - 32
	95 - 31
	96 - 35
77130-83812-07T	94 - 32
	95 - 31
	96 - 35
77130-83812-18J	87 - 48
	94 - 32
	95 - 31
	96 - 35

PART NO.	FIG.NO.-REF.NO.
77130-83812-19H	87 - 48
77130-83812-20V	87 - 48
	94 - 32
	95 - 31
	96 - 35
77130-83812-21L	87 - 48
	94 - 32
	95 - 31
	96 - 35
77130-83812-24U	87 - 48
	94 - 32
	95 - 31
	96 - 35
77130-83812-26U	87 - 48
	94 - 32
	95 - 31
	96 - 35
77130-83812-27G	87 - 48
	94 - 32
	95 - 31
	96 - 35
77130-83812-37T	87 - 48
	94 - 32
	95 - 31
	96 - 35
77130-83812-38C	87 - 48
	94 - 32
	95 - 31
	96 - 35
77140-83812-07B	87 - 47
	94 - 31
	95 - 30
	96 - 34
77140-83812-07T	94 - 31
	95 - 30
	96 - 34
77140-83812-18J	87 - 47
	94 - 31
	95 - 30
	96 - 34
77140-83812-19H	87 - 47
77140-83812-20V	87 - 47
	94 - 31
	95 - 30
	96 - 34

PART NO.	FIG.NO.-REF.NO.
77140-83812-21L	87 - 47
	94 - 31
	95 - 30
	96 - 34
77140-83812-24U	87 - 47
	94 - 31
	95 - 30
	96 - 34
77140-83812-26U	87 - 47
	94 - 31
	95 - 30
	96 - 34
77140-83812-27G	87 - 47
	94 - 31
	95 - 30
	96 - 34
77140-83812-37T	87 - 47
	94 - 31
	95 - 30
	96 - 34
77140-83812-38C	87 - 47
	94 - 31
	95 - 30
	96 - 34
77151-82000	85 - 43
	86 - 40
77311-80000	94 - 45
	98 - 12
77312-80000	94 - 46
	98 - 13
77313-80001	94 - 48
	98 - 15
77400-70812	93 - 19
	119 - 33
	121 - 5
77400-70832	119 - 34
77401-80812	119 - 32
77401-80851	119 - 31
77461-78000	119 - 35
	121 - 6
77461-80080	93 - 20
77511-80160	105 - 1
77512-80160	105 - 2
77513-80160	105 - 3
77514-80160	105 - 4

PART NO.	FIG.NO.-REF.NO.
77515-80160	105 - 5
77591-75000	119 - 36
77611-83010	95 - 35
77611-83020	94 - 61
	96 - 41
77613-83021	94 - 65
	94 - 66
	96 - 45
	96 - 46
77614-83021	94 - 64
	94 - 67
	96 - 44
	96 - 47
77640-70A00-2HL	105 - 18
77640-70A00-2HM	105 - 18
77640-70A00-2HN	105 - 18
77640-74A00-2HL	105 - 20
77640-74A00-2HM	105 - 20
77640-74A00-2HN	105 - 20
77650-70A00-2HL	105 - 19
77650-70A00-2HM	105 - 19
77650-70A00-2HN	105 - 19
77650-74A00-2HL	105 - 21
77650-74A00-2HM	105 - 21
77650-74A00-2HN	105 - 21
77716-79000	119 - 20
	121 - 9
77810-60021	93 - 21
77811-83000-8GS	87 - 36
77811-83040	99 - 23
77811-83060	99 - 23
77813-80010-019	93 - 31
	120 - 17
77813-80010-37E	93 - 31
	120 - 18
77815-83060	87 - 50
77819-83001	87 - 51
77830-70A00-07B	87 - 53
77830-70A00-18J	87 - 53
77830-70A00-19H	87 - 53
77830-70A00-20V	87 - 53
77830-70A00-21L	87 - 53
77830-70A00-24U	87 - 53
77830-70A00-26U	87 - 53
77830-70A00-27G	87 - 53

PART NO.	FIG.NO.-REF.NO.
77830-70A00-37T	87 - 53
77830-70A00-38C	87 - 53
77830-70A10-07B	87 - 54
77830-70A10-18J	87 - 54
77830-70A10-19H	87 - 54
77830-70A10-20V	87 - 54
77830-70A10-21L	87 - 54
77830-70A10-24U	87 - 54
77830-70A10-26U	87 - 54
77830-70A10-27G	87 - 54
77830-70A10-37T	87 - 54
77830-70A10-38C	87 - 54
77840-70A00-07B	87 - 55
77840-70A00-18J	87 - 55
77840-70A00-19H	87 - 55
77840-70A00-20V	87 - 55
77840-70A00-21L	87 - 55
77840-70A00-24U	87 - 55
77840-70A00-26U	87 - 55
77840-70A00-27G	87 - 55
77840-70A00-37T	87 - 55
77840-70A00-38C	87 - 55
77840-70A10-07B	87 - 56
77840-70A10-18J	87 - 56
77840-70A10-19H	87 - 56
77840-70A10-20V	87 - 56
77840-70A10-21L	87 - 56
77840-70A10-24U	87 - 56
77840-70A10-26U	87 - 56
77840-70A10-27G	87 - 56
77840-70A10-37T	87 - 56
77840-70A10-38C	87 - 56
77891-63100	93 - 24
	121 - 22
78111-80101-4FL	97 - 10
78111-80111-4KK	97 - 10
78111-80121-4FL	97 - 10
78111-80141-4KW	97 - 10
78111-83601-4KW	97 - 15
78121-83002-4GF	97 - 22
78131-83100	97 - 16
78132-83101	97 - 17
78133-83100	97 - 18
78141-80102	97 - 11
78141-83101	97 - 19

PART NO.	FIG.NO.-REF.NO.
78142-80101	89 - 12
78142-83100	97 - 21
78199-79000	121 - 19
78211-83600	97 - 23
78221-83601	97 - 24
78230-83601	97 - 26
78241-60002	119 - 27
78242-61000	119 - 26
78251-68201	93 - 23
	121 - 21
78261-68201	93 - 25
	121 - 23
78271-58053-281	117 - 16
78271-58053-5CW	117 - 16
78310-83044-40U	107 - 1
78310-83044-5ME	107 - 1
78310-83074-45R	107 - 1
	107 - 1
78310-83074-5MF	107 - 1
78310-83074-55M	107 - 1
78310-83114-40U	107 - 1
78310-83114-5ME	107 - 1
78310-83124-45R	107 - 1
78310-83214-5BA	107 - 1
78310-83214-5MF	107 - 1
78310-83214-55M	107 - 1
78310-83303-40U	109 - 1
78310-83303-5ME	109 - 1
78310-83313-45R	109 - 1
78310-83343-45R	108 - 1
78310-83353-40U	108 - 1
78310-83353-5ME	108 - 1
78310-83431-5BA	107 - 1
78310-83431-5MF	107 - 1
78310-83431-55M	107 - 1
78310-83460-45R	109 - 1
78310-83470-40U	109 - 1
78310-83470-5ME	109 - 1
78310-83480-40U	108 - 1
78310-83480-5ME	108 - 1
78411-80101	107 - 21
	108 - 14
	109 - 17
78415-83001	107 - 29
78416-83000	107 - 30

PART NO.	FIG.NO.-REF.NO.
78445-80001	108 - 12
78460-78002-281	118 - 22
78460-78002-5CW	118 - 22
78460-80330	109 - 9
78461-80010	107 - 9
78461-80220	107 - 26
78463-78000	118 - 23
78463-80330	109 - 10
78465-80010	107 - 10
78470-80001	107 - 6
78470-80011	107 - 8
78470-80330	109 - 11
78470-80341	108 - 9
78471-79000-281	119 - 28
78471-79000-5CW	119 - 28
78471-80300	109 - 8
78472-78000-281	118 - 24
78472-78000-5CW	118 - 24
78476-80002	107 - 19
	108 - 13
	109 - 16
78481-79000-281	119 - 29
78481-79000-5CW	119 - 29
78481-80000	107 - 14
78481-80340	108 - 8
78482-80301	107 - 7
	108 - 10
	109 - 14
78483-80301	108 - 11
	109 - 15
78484-80300	107 - 20
	108 - 16
	109 - 19
78485-80000	107 - 16
78485-80221	107 - 16
78488-80000	107 - 17
78490-80010	107 - 12
78490-83000-5EB	107 - 28
78491-80011	107 - 4
	108 - 4
	109 - 4
78491-83000	107 - 31
78501-78001	118 - 11
78502-78001	118 - 12
78510-80300	108 - 7

PART NO.	FIG.NO.-REF.NO.
78510-80300	109 - 7
78611-80000	94 - 51
	98 - 22
78611-80300	98 - 23
78621-80001	94 - 49
	98 - 16
78651-80000	94 - 52
	98 - 24
78651-80300	98 - 25
78660-80300	98 - 28
78660-80340	98 - 27
78661-80001	94 - 50
	98 - 17
78681-80301	98 - 8
78681-80321	94 - 40
78710-78000	118 - 3
78811-78400	118 - 6
78861-78400	118 - 25
78991-78000	118 - 9
79100-63860	107 - 2
	108 - 2
	109 - 2
79115-83000	123 - 29
79133-63041	107 - 3
	108 - 3
	109 - 3
79134-73002	107 - 5
	108 - 5
	109 - 5
79161-83300	70 - 14
81111-83001	104 - 12
81250-80000	103 - 1
81262-80000	103 - 6
81263-80000	103 - 11
81411-80100	104 - 2
81430-80102	104 - 3
81451-80101	104 - 4
81730-80101	118 - 16
81740-80101	118 - 17
81811-80100	117 - 10

PART NO.	FIG.NO.-REF.NO.
81860-80101	120 - 14
82110-80003	88 - 16
82110-80013	88 - 16
82160-80010	88 - 24
82171-80100	88 - 20
82191-82000	88 - 25
	102 - 44
82201-70A00	119 - 1
82202-70A00	119 - 2
82291-80100	119 - 13
82292-80100	119 - 14
82530-80101	121 - 1
82530-80111	121 - 1
82550-80082	93 - 9
82581-80100	121 - 7
82591-80060	93 - 14
82592-80060	93 - 16
82610-85000	119 - 6
82660-80100	121 - 18
82681-80100	119 - 7
82810-83000	119 - 9
	121 - 14
82820-83000	119 - 10
82891-80100	119 - 11
	121 - 15
82960-82100-281	118 - 22
82960-82100-5CW	118 - 22
83110-80100-281	119 - 21
83110-80100-5CW	119 - 21
83130-80100-281	119 - 22
83130-80100-5CW	119 - 22
83211-80100	119 - 15
83212-80100	119 - 16
83231-80100	121 - 10
83241-80100	119 - 24
83242-80100	119 - 25
83610-83920	131 - 13
	132 - 11
	133 - 11
	134 - 11
	135 - 11
	136 - 11
	137 - 30
83661-83000	118 - 7
83710-70A00-2AJ	117 - 13

PART NO.	FIG.NO.-REF.NO.
83710-70A00-2AK	117 - 13
83710-70A00-2AS	117 - 13
83710-70A00-2AU	117 - 13
83710-80131-5GR	117 - 13
83710-80131-5GT	117 - 13
83720-70A00-2AJ	117 - 14
83720-70A00-2AK	117 - 14
83720-70A00-2AS	117 - 14
83720-70A00-2AU	117 - 14
83720-80131-5GR	117 - 14
83720-80131-5GT	117 - 14
83771-80100	120 - 11
83772-80100	120 - 12
83811-80100	118 - 8
83850-80100	118 - 10
83910-83920	131 - 14
	132 - 12
	133 - 12
	134 - 12
	135 - 12
	136 - 12
	137 - 31
83911-80120	118 - 21
83912-80120	121 - 17
83914-73062	131 - 15
	132 - 13
	133 - 13
	134 - 13
	135 - 13
	136 - 13
	137 - 32
83944-73062	131 - 16
	132 - 14
	133 - 14
	134 - 14
	135 - 14
	136 - 14
	137 - 33
83960-83501	106 - 8
84354-79500	137 - 15
84410-70A00-5CW	100 - 34
84410-70A00-5ES	100 - 34
84422-70A00	100 - 35
84511-80101	89 - 21
84511-80111	89 - 21

PART NO.	FIG.NO.-REF.NO.
84511-80122	89 - 21
84511-80132	89 - 21
84531-80102	118 - 1
84531-80112	118 - 1
84536-80102	118 - 2
84536-80112	118 - 2
84561-80102	104 - 8
84561-80112	104 - 8
84565-80100	104 - 9
84571-80102	120 - 8
84571-80112	120 - 8
84571-80122	120 - 8
84571-80132	120 - 8
84611-80100	89 - 22
84621-80101	104 - 10
84621-80110	104 - 11
84623-80100	120 - 9
84630-80000	117 - 20
84640-80020	94 - 57
	98 - 20
84640-80030	94 - 58
	98 - 21
84641-80121	117 - 18
84642-80120	117 - 22
84644-80001	89 - 15
84645-80101	117 - 21
84646-80000	87 - 46
	94 - 56
	98 - 19
84648-80011	89 - 37
84649-80011	89 - 38
84650-80030	94 - 55
	98 - 18
84651-80121	117 - 19
84652-80120	117 - 23
84680-83000	112 - 32
84681-80001	93 - 28
84681-80100	120 - 10
84701-83000-281	88 - 26
84701-83010-281	88 - 26
84702-83000-281	88 - 27
84702-83010-281	88 - 27
84703-80000	89 - 25
84781-80000	89 - 31
84800-80830-4KJ	89 - 33

PART NO.	FIG.NO.-REF.NO.
	89 - 33
	89 - 33
	89 - 33
84800-80830-46Z	89 - 33
	89 - 33
84800-80840-4KJ	89 - 34
	89 - 34
	89 - 34
	89 - 34
84800-80840-46Z	89 - 34
	89 - 34
84800-83810-4KJ	89 - 33
84800-83810-46Z	89 - 33
84800-83820-4KJ	89 - 34
84800-83820-46Z	89 - 34
84800-83860-4KJ	89 - 33
	89 - 33
	89 - 33
84800-83860-46Z	89 - 33
84800-83870-4KJ	89 - 34
	89 - 34
84800-83870-46Z	89 - 34
84901-70A40-382	141 - 1
84901-70A40-5DD	141 - 1
84901-70A60-382	141 - 4
84901-70A60-5DD	141 - 4
84901-70A70-382	141 - 5
84901-70A70-5DD	141 - 5
84902-70A70-382	141 - 6
84902-70A70-5DD	141 - 6
84904-80190-382	141 - 8
84904-80190-5DD	141 - 8
84904-83020-382	141 - 9
84904-83020-5DD	141 - 9
84904-83030-382	141 - 10
84904-83030-5DD	141 - 10
84904-83040-382	141 - 11
84904-83040-5DD	141 - 11
84904-83050-382	141 - 7
84904-83050-5DD	141 - 7
84904-83060-382	141 - 12
84904-83060-5DD	141 - 12
84904-83070-382	141 - 13
84904-83070-5DD	141 - 13

PART NO.	FIG.NO.-REF.NO.
84924-80130	141 - 2
84961-83000	141 - 14
85105-80290	125 - 1
85105-80310	126 - 1
85105-83000	127 - 1
85106-80290	125 - 5
85106-80310	126 - 5
85106-83000	127 - 5
85180-80590-2AL	125 - 2
	125 - 2
85180-80600-2AL	126 - 2
85180-80600-2AM	126 - 2
85180-80600-2AN	126 - 2
85180-80600-2AP	126 - 2
85180-80610-2AL	125 - 2
	125 - 2
85180-80610-2AN	125 - 2
	125 - 2
85180-80620-2AL	126 - 2
85180-80620-2AM	126 - 2
85180-80620-2AN	126 - 2
85180-80620-2AP	126 - 2
85180-83000-2AJ	127 - 2
85180-83000-2AK	127 - 2
85180-83100-9YW	127 - 2
85180-83100-9YZ	127 - 2
85210-80290	125 - 9
	127 - 9
85210-83001	125 - 9
	126 - 9
	127 - 9
85221-82001-281	125 - 16
	126 - 16
	127 - 16
85221-82001-5CW	125 - 16
	126 - 16
	127 - 16
85291-80290	125 - 19
	126 - 22
	127 - 22
85305-80310	126 - 3
85305-83000	127 - 3
85305-83010	125 - 3
85306-80310	126 - 7
85306-83000	127 - 7

PART NO.	FIG.NO.-REF.NO.
85306-83010	125 - 7
85380-80600-2AL	126 - 4
85380-80600-2AM	126 - 4
85380-80600-2AN	126 - 4
85380-80600-2AP	126 - 4
85380-80620-2AL	126 - 4
85380-80620-2AM	126 - 4
85380-80620-2AN	126 - 4
85380-80620-2AP	126 - 4
85380-83000-2AJ	127 - 4
85380-83000-2AK	127 - 4
85380-83010-2AL	125 - 4
	125 - 4
85380-83010-2AN	125 - 4
	125 - 4
85380-83100-9YW	127 - 4
85380-83100-9YZ	127 - 4
85380-83110-2AL	125 - 4
85380-83110-2AN	125 - 4
85391-80290	126 - 19
	127 - 19
85410-73022	122 - 6
85410-79202	122 - 5
	123 - 5
85451-75100	123 - 19
85680-80590-2AL	125 - 6
85680-80590-2AN	125 - 6
85680-80600-2AL	126 - 6
85680-80600-2AM	126 - 6
85680-80600-2AN	126 - 6
85680-80600-2AP	126 - 6
85680-80610-2AL	125 - 6
	125 - 6
85680-80610-2AN	125 - 6
	125 - 6
85680-80620-2AL	126 - 6
85680-80620-2AM	126 - 6
85680-80620-2AN	126 - 6
85680-80620-2AP	126 - 6
85680-83000-2AJ	127 - 6
85680-83000-2AK	127 - 6
85680-83100-9YW	127 - 6
85680-83100-9YZ	127 - 6
85710-80290	125 - 10
	126 - 10
85710-83001	127 - 10
	125 - 10
	127 - 10
85721-82001-281	125 - 17
	126 - 17
	127 - 17
85721-82001-5CW	125 - 17
	126 - 17
	127 - 17
85880-80600-2AL	126 - 8
85880-80600-2AM	126 - 8
85880-80600-2AN	126 - 8
85880-80600-2AP	126 - 8
85880-80620-2AL	126 - 8
85880-80620-2AM	126 - 8
85880-80620-2AN	126 - 8
85880-80620-2AP	126 - 8
85880-83000-2AJ	127 - 8
85880-83000-2AK	127 - 8
85880-83010-2AL	125 - 8
85880-83010-2AN	125 - 8
	125 - 8
85880-83100-9YW	127 - 8
85880-83100-9YZ	127 - 8
85880-83110-2AL	125 - 8
85880-83110-2AN	125 - 8
85890-80290	126 - 20
85890-83000	127 - 20
86103-63010	89 - 23
86103-73020	89 - 24
86124-63010	89 - 26
86124-73020	89 - 27
86169-78400	89 - 29
86169-79000	89 - 30
86200-66813-281	94 - 59
	96 - 39
86370-58140-281	105 - 13
	105 - 13
	105 - 13
86401-70A00-5GS	127 - 21
86401-70A00-5GU	127 - 21
86401-80291-5GS	126 - 21
86401-80291-5GU	126 - 21
86492-79521	105 - 6
86601-80134	125 - 25
	125 - 26
	126 - 28
	127 - 28
	127 - 29
86602-80133	125 - 25
	125 - 26
	126 - 29
	127 - 28
	127 - 29
86701-83030	125 - 21
	126 - 24
	127 - 24
86731-83000	125 - 23
	126 - 26
	127 - 26
86732-83030	125 - 24
	126 - 27
	127 - 27
86736-83000	125 - 22
	126 - 25
	127 - 25
86901-83030	125 - 21
	127 - 24
86932-73060	123 - 28
	124 - 32
87101-80300-2AL	138 - 1
87101-80300-2AN	138 - 1
87101-80400-2AM	138 - 1
87101-80400-2AP	138 - 1
87101-83050-9YW	139 - 2
87101-83050-9YZ	139 - 2
87102-83050-9YW	139 - 1
87102-83050-9YZ	139 - 1
87105-80820	128 - 1
87105-80830	129 - 1
87105-80840	129 - 1
87105-80850	130 - 1
87105-80860	130 - 1
87105-81800	134 - 1
87105-83810	137 - 1
87105-83840	137 - 1
87105-83850	131 - 1
87105-83860	132 - 1
87105-83870	133 - 1

PART NO.	FIG.NO.-REF.NO.
87105-83880	135 - 1
87105-83890	136 - 1
87106-83810	137 - 5
87106-83820	137 - 5
87180-80570-2AL	129 - 2
	130 - 2
87180-80570-2AN	129 - 2
	130 - 2
87180-80580-2AL	128 - 2
87180-80580-2AN	128 - 2
87180-80590-2AL	129 - 2
	130 - 2
87180-80590-2AN	129 - 2
	130 - 2
87180-80600-2AL	128 - 2
87180-80600-2AM	128 - 2
87180-80600-2AN	128 - 2
87180-80600-2AP	128 - 2
87180-83000-2AJ	131 - 2
	132 - 2
87180-83000-2AK	131 - 2
	132 - 2
87180-83100-9YW	131 - 2
	132 - 2
87180-83100-9YZ	131 - 2
	132 - 2
87180-83170-9YW	133 - 2
	135 - 2
87180-83170-9YZ	133 - 2
	135 - 2
87180-83180-9YW	134 - 2
87180-83180-9YZ	134 - 2
87180-83300-2AJ	137 - 2
87180-83300-2AK	137 - 2
87180-83310-9YW	137 - 2
87180-83310-9YZ	137 - 2
87180-83320-9YW	137 - 2
87180-83320-9YZ	137 - 2
87180-83420-2AJ	136 - 2
87180-83420-2AK	136 - 2
87180-83430-2AJ	135 - 2
87180-83430-2AK	135 - 2
87180-83440-9YW	136 - 2
87180-83440-9YZ	136 - 2
87191-80300	138 - 3
87195-83000	131 - 7
	132 - 7
	136 - 7
	137 - 13
	128 - 13
87210-80200	129 - 11
	130 - 11
	128 - 18
	129 - 16
	130 - 16
87221-80200	137 - 40
	128 - 20
	129 - 18
	130 - 18
	131 - 22
87228-83300	132 - 20
87229-80200	133 - 20
	134 - 20
	135 - 20
	136 - 20
87229-83000	137 - 42
	138 - 5
	137 - 16
	138 - 6
	137 - 18
87250-80300	137 - 18
87250-83300	137 - 20
87252-80300	137 - 21
87255-83300	137 - 23
	128 - 3
87255-83320	129 - 3
87256-83300	130 - 3
87257-83300	135 - 3
87258-83300	136 - 3
87271-80280	139 - 3
87271-83000	131 - 3
	132 - 3
	133 - 3
	134 - 3
	137 - 9
87271-85500	137 - 37
	140 - 11
87291-80230	128 - 24
87291-83000	131 - 30
	133 - 28
87291-83170	135 - 28
87291-83300-281	137 - 25
87291-83320-281	137 - 25
87292-80230	128 - 25
87292-83300-281	137 - 27
87293-83000	131 - 27
	133 - 25
	137 - 47
87293-83430	135 - 25
87295-80470	140 - 8
87301-80301-2AL	138 - 4
87301-80301-2AN	138 - 4
87301-80401-2AM	138 - 4
87301-80401-2AP	138 - 4
87301-83050-9YW	139 - 10
87301-83050-9YZ	139 - 10
87302-83050-9YW	139 - 9
87302-83050-9YZ	139 - 9
87305-80810	128 - 11
87305-80830	129 - 9
87305-80840	129 - 9
87305-80850	130 - 9
87305-80860	130 - 9
87305-83800	131 - 11
	132 - 9
87305-83810	133 - 9
	134 - 9
	135 - 9
	136 - 9
	137 - 3
87306-83810	137 - 7
87325-83000	131 - 17
	132 - 15
	133 - 15
	134 - 15
87327-83000	135 - 15
	136 - 15
	137 - 34
	131 - 28
	133 - 26
87328-83000	135 - 26
	137 - 48
	131 - 26
	132 - 24
	133 - 24

PART NO.	FIG.NO.-REF.NO.
87328-83000	134 - 24
	135 - 24
	136 - 24
	137 - 46
	140 - 18
87380-80550-2AL	128 - 12
	129 - 10
	130 - 10
87380-80550-2AN	128 - 12
	129 - 10
	130 - 10
87380-80590-2AL	128 - 12
	129 - 10
	130 - 10
87380-80590-2AM	128 - 12
87380-80590-2AN	128 - 12
	129 - 10
	130 - 10
87380-80590-2AP	128 - 12
87380-83000-2AJ	131 - 12
	132 - 10
	135 - 10
	136 - 10
87380-83000-2AK	131 - 12
	132 - 10
	135 - 10
	136 - 10
87380-83100-9YW	131 - 12
	132 - 10
	133 - 10
	134 - 10
	135 - 10
	136 - 10
87380-83100-9YZ	131 - 12
	132 - 10
	133 - 10
	134 - 10
	135 - 10
	136 - 10
87380-83300-2AJ	137 - 4
87380-83300-2AK	137 - 4
87380-83310-9YW	137 - 4
87380-83310-9YZ	137 - 4
87580-83300-2AJ	137 - 6
87580-83300-2AK	137 - 6
87580-83310-9YW	137 - 6
87580-83310-9YZ	137 - 6
87580-83320-9YW	137 - 6
87580-83320-9YZ	137 - 6
87610-80200	128 - 14
	129 - 12
	130 - 12
87621-80200	128 - 19
	129 - 17
	130 - 17
87628-83300	137 - 41
87629-80200	128 - 21
	129 - 19
	130 - 19
87629-83000	131 - 23
	132 - 21
	133 - 21
	134 - 21
	135 - 21
	136 - 21
	137 - 43
87650-83300	137 - 17
87655-83300	137 - 19
87655-83320	137 - 19
87691-83300-281	137 - 26
87691-83320-281	137 - 26
87692-83300-281	137 - 28
87780-83300-2AJ	137 - 8
87780-83300-2AK	137 - 8
87780-83310-9YW	137 - 8
87780-83310-9YZ	137 - 8
87830-80270	137 - 51
87831-80300	138 - 14
87850-80300	138 - 20
87950-80300	138 - 21
88101-83050-2JM	140 - 1
88101-83050-2JN	140 - 1
88140-80070	102 - 10
88153-80070	102 - 7
88196-79000	102 - 11
88229-83050-281	140 - 14
88271-83050	140 - 2
88291-83050	140 - 9
88301-83050-2JM	140 - 10
88301-83050-2JN	140 - 10
88629-83050-281	140 - 15
88880-83050-2JP	140 - 19
88880-83050-2JR	140 - 19
89101-80026	122 - 1
	123 - 1
89101-80036	124 - 1
89210-80001	94 - 22
	96 - 29
89210-80011	94 - 22
	95 - 21
	96 - 29
89210-80021	94 - 22
	95 - 21
	96 - 29
89210-80031	94 - 22
	95 - 21
	96 - 29
89241-83020	122 - 7
	123 - 6
	124 - 6
89241-83030	124 - 6
89260-80001	124 - 5
89281-80000	122 - 10
	123 - 9
89281-80010	124 - 9
89291-83030	124 - 16
89311-80000	122 - 11
	123 - 10
	124 - 10
89311-80300	122 - 11
	123 - 10
	124 - 10
89312-83020	122 - 13
89312-83030	123 - 13
	124 - 12
89320-83001	122 - 23
	123 - 12
	124 - 18
89411-80000	124 - 21
89431-83301	124 - 19
89431-83500	124 - 19
89810-70A00-281	100 - 37
89821-80000	105 - 17

90000

PART NO.	FIG.NO.-REF.NO.
93110-83001-281	112 - 51
93313-83000-281	112 - 52
93314-83000-281	112 - 53
93600-83000	111 - 1
93610-83001-2HA	112 - 1
93610-83001-8CT	112 - 1
93611-80011-55P	110 - 1
93611-80011-55R	110 - 1
93620-80010	110 - 19
93620-80020	110 - 19
93620-83010-2HA	112 - 18
93620-83010-8CT	112 - 18
93627-80013	110 - 20
93628-83010-2HP	112 - 20
93628-83010-2HR	112 - 20
93628-83010-8RJ	112 - 20
93628-83010-8RK	112 - 20
93628-83010-9DN	112 - 20
93629-83010-2HP	112 - 21
93629-83010-2HR	112 - 21
93629-83010-8RJ	112 - 21
93629-83010-8RK	112 - 21
93629-83010-9DN	112 - 21
93630-80010	110 - 28
93630-83011-2HA	112 - 34
93630-83011-8CT	112 - 34
93631-80010	110 - 21
93632-80010	110 - 76
93633-80010	110 - 78
93634-80010	110 - 77
93635-80010	110 - 22
93636-80010	110 - 30
93637-80010	110 - 31
93640-80011	110 - 24
	112 - 3
93640-83000-281	111 - 3
93642-80011	110 - 25
93642-83000	112 - 9
93643-83010	112 - 11
93644-83010	112 - 12
93645-80010	110 - 26
93650-83000-281	111 - 4
93651-80011-55P	110 - 2
93651-80011-55R	110 - 2
93660-83000-281	111 - 11
93661-80010	110 - 34
93670-80011	110 - 14
93670-80023	110 - 39
93670-83000-281	111 - 12
93675-80020	110 - 41
93676-80020	110 - 42
93680-80023	110 - 40
93680-83000-281	111 - 15
93685-80020	110 - 43
93686-80020	110 - 44
93690-83000-281	111 - 8
93710-83000	111 - 16
93711-80011-55P	110 - 3
93711-80011-55R	110 - 3
93717-80011	110 - 47
93718-80011	110 - 48
93720-83000	111 - 18
93721-80011-55P	110 - 4
93721-80011-55R	110 - 4
93731-80010	110 - 5
93731-80020	110 - 5
93732-80010	110 - 6
93732-80020	110 - 6
93733-80012	110 - 7
93733-83000	112 - 35
93740-80011	110 - 27
93740-83000-5GR	112 - 45
93740-83000-5GT	112 - 45
93750-80021	110 - 8
93750-83000-5GR	112 - 46
93750-83000-5GT	112 - 46
93751-80012-55P	110 - 9
93751-80012-55R	110 - 9
93760-80011	110 - 12
93760-83000-4FK	112 - 14
93765-80010	110 - 13
93767-80010	110 - 32
93770-80012	110 - 37
93771-80012	110 - 33
93772-80010	110 - 49
93772-83000	112 - 25
93773-80010	110 - 50
93773-83000	112 - 26
93774-83000	112 - 7
93775-80011	110 - 35
93775-83000	112 - 8
93776-80011	110 - 46
93776-83000	112 - 10
93777-83000	112 - 40
93778-83000	112 - 22
93779-80011	110 - 45
93779-83001	112 - 33
93780-80012	110 - 36
93783-80010	110 - 11
93783-80020	110 - 11
93783-80030	110 - 11
93783-80040	110 - 11
93784-80012	110 - 10
93791-80010	110 - 29
	112 - 56
93792-80011	110 - 38
93793-80010	110 - 18
93795-80021	110 - 15
93796-80021	110 - 16
93797-80010	110 - 75
93798-80020	110 - 17
93810-83000	111 - 42
93820-83000	111 - 43
93832-83010	111 - 25
93833-83010	111 - 26
93834-83010	111 - 27
93835-83010	111 - 28
93836-83000	111 - 20
93837-83000	111 - 21
93838-83050	111 - 24
93841-83000	112 - 4
93842-83000	112 - 5
93843-83000	112 - 13
93844-83000-4GF	111 - 14
93845-83010	112 - 41
93851-83001	111 - 40
93852-83000	111 - 30
93852-83010	111 - 31
93853-83000	111 - 29
93854-83000	111 - 38

PART NO.	FIG.NO.-REF.NO.
93855-83001	112 - 19
93857-83000	112 - 2
93858-83000	111 - 2
93861-83001	111 - 41
93864-83000	111 - 39
93867-83010	112 - 55
93870-83001	111 - 44
93870-83010	111 - 22
93871-83000	111 - 46
93872-83000	111 - 47
93880-83001	111 - 45
93880-83010	111 - 23
95000-70A00	142
95000-70A10	142
95000-70A20	142
95000-70A30	142
95111-82000	142 - 1
95112-82000	142 - 2
95141-83000	142 - 3
95200-83000	142 - 56
95310-83000	142 - 57
95310-83020	142 - 57
95330-83000	142 - 54
95400-83000	142 - 53
95400-83020	142 - 53
95431-80070	142 - 18
95432-80070	142 - 19
95432-80090	142 - 19
95491-83000	142 - 26
95491-83020	142 - 26
95495-78000	102 - 15
95510-80070	142 - 17
95510-80090	142 - 17
95520-83000	142 - 29
95520-83020	142 - 29
95550-83050	142 - 84
95551-83000	142 - 9
95551-83020	142 - 9
95558-78100	142 - 12
95571-70A00	142 - 14
95571-83050	142 - 15
95572-83000	142 - 16
95582-70A00	142 - 23
95582-70A20	142 - 23
95583-70A00	142 - 24
95583-70A20	142 - 24
95584-83000	142 - 25
95591-70A00	142 - 28
95621-83000	142 - 49
95622-80000	142 - 50
95624-83000	142 - 52
95710-83000	142 - 5
95710-83021	142 - 5
95720-83000	142 - 6
95720-83020	142 - 6
95731-83021	142 - 4
95741-83000	142 - 47
95741-83020	142 - 47
95751-83000	142 - 48
95751-83020	142 - 48
95761-80000	142 - 10
95762-83000	142 - 7
95763-83000	142 - 8
95765-74000	142 - 11
95765-78120	142 - 44
95765-83000	142 - 45
95765-84000	142 - 51
95766-83000	142 - 46
95771-83000	142 - 37
95773-83000	142 - 39
95776-83020	142 - 43
95777-80000	142 - 36
95778-83000	142 - 35
95778-83020	142 - 40
95778-86000	142 - 21
95779-80000	142 - 13
95779-83020	142 - 41
95779-84300	142 - 38
95781-83000	142 - 42
95790-74000	142 - 55
95911-80000	102 - 17
	142 - 31
95911-82000	142 - 62
95912-83080	142 - 64
95915-83000	142 - 76
	142 - 76
95916-83000	142 - 80
95917-83000	142 - 72
	142 - 72
95918-83000	142 - 83
95921-83000	142 - 81
95931-80000	142 - 27
95961-83000	142 - 32
95961-83020	142 - 32
95962-80070	142 - 20
95981-83000	142 - 30
99000-31050	110 - 58
99000-73371	113 - 15
	114 - 21
	115 - 10
	116 - 16
99000-99062-001	106 - 16
01104-12553	74 - 32
	75 - 32
01107-06123	80 - 24
	80 - 24
	80 - 24
	81 - 24
	81 - 24
	81 - 30
	83 - 15
	84 - 10
	91 - 12
01107-06126	92 - 29
01107-06127	87 - 16
01107-06166	57 - 24
	63 - 10
	103 - 2
	103 - 8
	125 - 27
	126 - 30
	127 - 30
	138 - 22
01107-06167	88 - 4
01107-06203	31 - 2
	32 - 2
	34 - 2

00000

PART NO.	FIG.NO.-REF.NO.
01107-06203	35 - 2
	84 - 3
01107-06205	63 - 17
01107-06206	8 - 20
01107-06356	142 - 69
01107-06503	26 - 10
01107-08123	39 - 21
01107-08126	43 - 28
	58 - 30
01107-08163	5 - 17
	33 - 41
	35 - 16
	37 - 2
	44 - 16
	64 - 5
	84 - 13
01107-08165	112 - 39
01107-08166	85 - 38
	86 - 35
	125 - 11
	125 - 30
	126 - 11
	126 - 33
	127 - 11
	127 - 33
01107-08167	138 - 15
01107-08203	5 - 13
	65 - 5
	66 - 23
	84 - 22
01107-08205	139 - 11
01107-08206	72 - 2
	76 - 10
	77 - 11
	140 - 20
01107-08253	19 - 5
	20 - 5
	21 - 10
	22 - 11
	43 - 13
	49 - 38
	66 - 15
01107-08256	72 - 19
	73 - 17
01107-08303	5 - 19
	29 - 4
	30 - 4
	46 - 3
	46 - 15
	74 - 29
	75 - 29
01107-08356	19 - 6
	20 - 6
01107-08403	46 - 4
	46 - 16
01107-08803	46 - 17
01107-10166	125 - 13
	126 - 13
	127 - 13
01107-10203	85 - 16
	86 - 16
	106 - 9
01107-10303	5 - 6
	5 - 9
	122 - 2
	123 - 2
	124 - 2
01107-10406	85 - 27
	86 - 24
	125 - 14
	126 - 14
	127 - 14
01107-12303	85 - 47
01107-12703	74 - 6
	75 - 6
01107-12903	74 - 7
	75 - 7
01411-06123	4 - 4
	19 - 9
	20 - 9
01411-06203	27 - 9
01411-08253	19 - 3
	20 - 3
01421-06203	26 - 4
	27 - 4
01421-08253	9 - 9
	10 - 9
	23 - 4
	24 - 4
01421-08306	10 - 3
01421-10353	39 - 24
01421-10453	39 - 25
01514-08123	87 - 25
01517-06103	3 - 12
	9 - 17
	9 - 26
	10 - 24
	18 - 16
	19 - 13
	20 - 13
	28 - 5
	28 - 12
	29 - 8
	30 - 8
	58 - 20
	78 - 38
	93 - 30
01517-06106	100 - 21
	122 - 14
	123 - 14
	124 - 13
01517-06123	4 - 14
	23 - 8
	24 - 8
	29 - 16
	30 - 16
	33 - 23
	41 - 22
	80 - 30
	91 - 22
	91 - 30
	92 - 23
	92 - 26
01517-06126	4 - 10
01517-06163	8 - 24
	18 - 8
	41 - 15
	80 - 4
	81 - 4
01517-06166	102 - 38
	142 - 65
	142 - 65
01517-06203	6 - 13
	6 - 24
	8 - 25

PART NO.	FIG.NO.-REF.NO.
01517-06203	15 - 12
	16 - 20
	17 - 20
01517-06206	142 - 75
01517-06253	2 - 16
	6 - 25
	25 - 14
	80 - 32
	81 - 6
01517-06302	19 - 14
	20 - 14
01517-06353	25 - 15
01517-06406	142 - 79
01517-06506	2 - 17
01517-08163	22 - 8
01517-08166	99 - 8
	128 - 27
	129 - 22
	130 - 22
	131 - 32
	132 - 25
	133 - 30
	134 - 25
	135 - 30
	136 - 25
	137 - 50
	139 - 14
01517-08203	41 - 2
	46 - 22
	49 - 35
	49 - 41
	142 - 59
	142 - 60
01517-08253	9 - 11
	10 - 11
	47 - 20
	142 - 61
01517-08256	9 - 11
	10 - 12
01517-08306	48 - 21
01517-08353	21 - 14
	22 - 15
	37 - 13
	39 - 17
	49 - 31
01517-08356	8 - 10
	76 - 22
01517-08406	48 - 22
01517-08553	21 - 16
	22 - 18
01517-10203	18 - 14
	142 - 58
01517-10256	137 - 52
01534-10163	33 - 34
01537-06102	19 - 12
	20 - 12
01537-06403	80 - 28
	81 - 28
01537-06453	33 - 3
	34 - 9
01537-06803	2 - 11
01537-08123	21 - 7
01537-08303	39 - 4
01537-08653	39 - 5
01537-08703	47 - 27
01537-10603	39 - 27
01537-10703	39 - 28
01537-12256	8 - 2
02112-03087	102 - 21
02112-04083	16 - 32
02112-04087	55 - 5
	55 - 15
02112-04106	13 - 9
	13 - 19
02112-05086	13 - 26
02112-05088	122 - 26
	123 - 27
	124 - 31
02112-05103	69 - 4
	89 - 6
02112-05125	89 - 28
02112-05126	13 - 4
	13 - 56
	72 - 11
	73 - 9
02112-05166	13 - 62
02112-05206	13 - 63
02112-06086	118 - 4
	118 - 13
02112-06103	68 - 14
02112-06106	13 - 50
02112-06123	85 - 19
	86 - 43
	121 - 2
02112-06125	87 - 39
	93 - 15
	93 - 17
	110 - 65
02112-06126	13 - 12
	76 - 7
	77 - 8
	142 - 82
	142 - 82
02112-06128	93 - 11
	118 - 18
02112-06143	33 - 29
02112-06163	88 - 15
	93 - 7
	106 - 7
	121 - 24
02112-06164	15 - 9
	16 - 9
	17 - 9
	99 - 2
	99 - 5
02112-06166	106 - 15
02112-06167	93 - 26
02112-06205	112 - 23
02112-06256	25 - 12
02112-06303	107 - 15
02112-06404	88 - 22
02122-04128	105 - 14
	105 - 14
02122-04168	105 - 14
02122-05126	111 - 5
02122-06108	7 - 5
02122-06148	25 - 5
02122-06166	119 - 4
02132-04205	111 - 37
02132-05105	89 - 35
02132-05124	111 - 19
02132-05205	117 - 12
02132-06253	111 - 9
02142-04083	110 - 73
02142-04106	100 - 12

PART NO.	FIG.NO.-REF.NO.
02142-05065	104 - 6
02142-05083	107 - 27
	110 - 67
	111 - 6
02142-05085	104 - 5
02142-05086	53 - 25
	54 - 26
02142-05087	128 - 26
02142-05107	138 - 13
02142-05123	58 - 22
02142-05128	59 - 36
	89 - 32
02142-05164	111 - 13
02142-05167	104 - 7
02142-06088	59 - 44
02142-06103	33 - 6
	33 - 21
	50 - 19
	51 - 19
	107 - 22
	107 - 32
	108 - 15
02142-06104	110 - 59
	112 - 6
02142-06106	52 - 10
02142-06108	109 - 18
	118 - 15
	119 - 23
	122 - 12
	123 - 11
02142-06123	124 - 11
	15 - 27
	16 - 38
	17 - 35
	87 - 26
02142-06125	99 - 18
	94 - 6
	95 - 34
	97 - 20
	100 - 27
02142-06126	141 - 3
	60 - 21
	61 - 17
	62 - 3
	97 - 12
02142-06127	59 - 48
	60 - 2
	61 - 2
	109 - 12
	128 - 17
	129 - 15
	130 - 15
02142-06164	89 - 4
	98 - 11
	99 - 10
	100 - 5
	112 - 54
02142-06205	110 - 63
	112 - 27
	112 - 42
	112 - 43
02142-06253	112 - 29
02142-06506	59 - 42
03111-04126	142 - 77
03111-04165	57 - 14
03111-05126	100 - 6
	57 - 10
	57 - 15
	58 - 10
	58 - 33
03111-05203	89 - 14
03111-05303	100 - 28
03112-04169	56 - 13
	56 - 18
03112-04309	56 - 5
03112-05129	58 - 26
	59 - 20
03112-05259	57 - 4
03121-05165	53 - 18
	54 - 19
03131-05255	111 - 17
03141-04085	119 - 30
03141-04086	59 - 32
	73 - 26
03141-04108	102 - 5
03141-05106	15 - 28
	16 - 39
	17 - 36
03141-05128	58 - 19
	59 - 35
03141-05165	53 - 20
	54 - 21
03141-05206	131 - 8
	132 - 8
	136 - 8
	137 - 14
03141-06108	122 - 22
	123 - 24
	124 - 22
03141-06123	21 - 19
	22 - 20
	57 - 27
	85 - 42
	86 - 39
	105 - 12
	105 - 12
03141-06125	99 - 13
	99 - 20
03141-06126	86 - 48
	112 - 49
03141-06163	45 - 20
	86 - 46
03142-04169	100 - 32
03142-05209	128 - 8
	129 - 8
	130 - 8
	133 - 8
	134 - 8
	135 - 8
	140 - 7
03151-05166	142 - 68
	142 - 68
	142 - 68
	142 - 68
03151-06166	142 - 67
03211-05163	89 - 9
03211-05166	72 - 10
	73 - 8
03211-06163	89 - 11
03211-06166	142 - 73
03212-04109	59 - 6
	59 - 22
03212-04169	57 - 21

PART NO.	FIG.NO.-REF.NO.
01517-06203	15 - 12
	16 - 20
	17 - 20
01517-06206	142 - 75
01517-06253	2 - 16
	6 - 25
	25 - 14
	80 - 32
	81 - 6
01517-06302	19 - 14
	20 - 14
01517-06353	25 - 15
01517-06406	142 - 79
01517-06506	2 - 17
01517-08163	22 - 8
01517-08166	99 - 8
	128 - 27
	129 - 22
	130 - 22
	131 - 32
	132 - 25
	133 - 30
	134 - 25
	135 - 30
	136 - 25
	137 - 50
	139 - 14
01517-08203	41 - 2
	46 - 22
	49 - 35
	49 - 41
	142 - 59
	142 - 60
01517-08253	9 - 11
	10 - 11
	47 - 20
	142 - 61
01517-08256	9 - 11
	10 - 12
01517-08306	48 - 21
01517-08353	21 - 14
	22 - 15
	37 - 13
	39 - 17
	49 - 31

PART NO.	FIG.NO.-REF.NO.
01517-08356	8 - 10
	76 - 22
01517-08406	48 - 22
01517-08553	21 - 16
	22 - 18
01517-10203	18 - 14
	142 - 58
01517-10256	137 - 52
01534-10163	33 - 34
01537-06102	19 - 12
	20 - 12
01537-06403	80 - 28
	81 - 28
01537-06453	33 - 3
	34 - 9
01537-06803	2 - 11
01537-08123	21 - 7
01537-08303	39 - 4
01537-08653	39 - 5
01537-08703	47 - 27
01537-10603	39 - 27
01537-10703	39 - 28
01537-12256	8 - 2
02112-03087	102 - 21
02112-04083	16 - 32
02112-04087	55 - 5
	55 - 15
02112-04106	13 - 9
	13 - 19
02112-05086	13 - 26
02112-05088	122 - 26
	123 - 27
	124 - 31
02112-05103	69 - 4
	89 - 6
02112-05125	89 - 28
02112-05126	13 - 4
	13 - 56
	72 - 11
	73 - 9
02112-05166	13 - 62
02112-05206	13 - 63
02112-06086	118 - 4
	118 - 13
02112-06103	68 - 14

PART NO.	FIG.NO.-REF.NO.
02112-06106	13 - 50
02112-06123	85 - 19
	86 - 43
	121 - 2
02112-06125	87 - 39
	93 - 15
	93 - 17
	110 - 65
02112-06126	13 - 12
	76 - 7
	77 - 8
	142 - 82
	142 - 82
02112-06128	93 - 11
	118 - 18
02112-06143	33 - 29
02112-06163	88 - 15
	93 - 7
	106 - 7
	121 - 24
02112-06164	15 - 9
	16 - 9
	17 - 9
	99 - 2
	99 - 5
02112-06166	106 - 15
02112-06167	93 - 26
02112-06205	112 - 23
02112-06256	25 - 12
02112-06303	107 - 15
02112-06404	88 - 22
02122-04128	105 - 14
	105 - 14
02122-04168	105 - 14
02122-05126	111 - 5
02122-06108	7 - 5
02122-06148	25 - 5
02122-06166	119 - 4
02132-04205	111 - 37
02132-05105	89 - 35
02132-05124	111 - 19
02132-05205	117 - 12
02132-06253	111 - 9
02142-04083	110 - 73
02142-04106	100 - 12

PART NO.	FIG.NO.-REF.NO.
02142-05065	104 - 6
02142-05083	107 - 27
	110 - 67
	111 - 6
02142-05085	104 - 5
02142-05086	53 - 25
	54 - 26
02142-05087	128 - 26
02142-05107	138 - 13
02142-05123	58 - 22
02142-05128	59 - 36
	89 - 32
02142-05164	111 - 13
02142-05167	104 - 7
02142-06088	59 - 44
02142-06103	33 - 6
	33 - 21
	50 - 19
	51 - 19
	107 - 22
	107 - 32
	108 - 15
02142-06104	110 - 59
	112 - 6
02142-06106	52 - 10
02142-06108	109 - 18
	118 - 15
	119 - 23
	122 - 12
	123 - 11
02142-06123	124 - 11
	15 - 27
	16 - 38
	17 - 35
	87 - 26
02142-06125	99 - 18
	94 - 6
	95 - 34
	97 - 20
	100 - 27
02142-06126	141 - 3
	60 - 21
	61 - 17
	62 - 3
	97 - 12

PART NO.	FIG.NO.-REF.NO.
02142-06127	59 - 48
	60 - 2
	61 - 2
	109 - 12
	128 - 17
	129 - 15
	130 - 15
02142-06164	89 - 4
	98 - 11
	99 - 10
	100 - 5
02142-06205	112 - 54
	110 - 63
	112 - 27
	112 - 42
	112 - 43
02142-06253	112 - 29
02142-06506	59 - 42
03111-04126	142 - 77
03111-04165	57 - 14
03111-05126	100 - 6
	57 - 10
	57 - 15
	58 - 10
	58 - 33
03111-05203	89 - 14
03111-05303	100 - 28
03112-04169	56 - 13
	56 - 18
03112-04309	56 - 5
03112-05129	58 - 26
	59 - 20
03112-05259	57 - 4
03121-05165	53 - 18
	54 - 19
03131-05255	111 - 17
03141-04085	119 - 30
03141-04086	59 - 32
	73 - 26
03141-04108	102 - 5
03141-05106	15 - 28
	16 - 39
	17 - 36
03141-05128	58 - 19
	59 - 35

PART NO.	FIG.NO.-REF.NO.
	59 - 49
	120 - 13
03141-05165	53 - 20
	54 - 21
03141-05206	131 - 8
	132 - 8
	136 - 8
	137 - 14
03141-06108	122 - 22
	123 - 24
	124 - 22
03141-06123	21 - 19
	22 - 20
	57 - 27
	85 - 42
	86 - 39
	105 - 12
	105 - 12
03141-06125	99 - 13
	99 - 20
03141-06126	86 - 48
	112 - 49
03141-06163	45 - 20
	86 - 46
03142-04169	100 - 32
03142-05209	128 - 8
	129 - 8
	130 - 8
	133 - 8
	134 - 8
	135 - 8
	140 - 7
03151-05166	142 - 68
	142 - 68
	142 - 68
	142 - 68
03151-06166	142 - 67
03211-05163	89 - 9
03211-05166	72 - 10
	73 - 8
03211-06163	89 - 11
03211-06166	142 - 73
03212-04109	59 - 6
	59 - 22
03212-04169	57 - 21

PART NO.	FIG.NO.-REF.NO.
03212-05165	137 - 29
03212-05169	63 - 3
	102 - 8
03241-05085	128 - 22
	129 - 20
	130 - 20
	131 - 24
	132 - 22
	133 - 22
	134 - 22
	135 - 22
	136 - 22
	137 - 44
	140 - 16
03241-05108	100 - 38
03241-05125	125 - 18
	126 - 18
	127 - 18
	139 - 8
03241-05145	131 - 29
	133 - 27
	135 - 27
03241-05255	107 - 11
03241-06103	85 - 14
	86 - 14
03241-06105	110 - 66
03241-06123	47 - 38
03241-06126	29 - 24
	30 - 24
03242-05129	128 - 10
	131 - 10
03242-05165	87 - 34
	99 - 21
	99 - 25
	100 - 7
	100 - 14
	100 - 29
	137 - 49
03511-05166	53 - 23
	54 - 24
	102 - 35
	142 - 71
03541-04106	101 - 15
03541-05123	100 - 9
	100 - 30
03541-05126	101 - 11
03541-05163	100 - 10
04111-25206	78 - 36
	79 - 35
04111-30306	74 - 14
	74 - 25
	75 - 14
	75 - 25
04211-09109	6 - 26
	25 - 16
04211-09169	47 - 26
04221-06129	6 - 18
06111-06003	38 - 8
06111-12004	40 - 19
	40 - 19
	45 - 9
06112-10004	41 - 6
	45 - 8
08133-62007	6 - 20
08173-63060	44 - 26
08211-17251	47 - 8
08211-17363	47 - 7
08212-14201	40 - 12
08310-11047	105 - 16
08310-11056	49 - 14
08310-11063	52 - 15
	4 - 6
	19 - 11
	20 - 11
	27 - 11
	27 - 14
	49 - 30
	84 - 19
	112 - 30
	120 - 16
08310-11066	49 - 27
	62 - 7
	76 - 4
	76 - 27
	77 - 5
08310-11083	77 - 27
	88 - 23
	142 - 78
	19 - 4
	20 - 4
08310-11123	74 - 31
	75 - 31
	83 - 3
	84 - 24
	64 - 13
	64 - 24
	64 - 34
	67 - 10
	67 - 14
	67 - 25
08310-11126	74 - 9
	74 - 35
	75 - 9
	75 - 35
	68 - 10
08310-12083	142 - 63
08310-12086	48 - 6
	48 - 24
	72 - 21
	73 - 19
08310-12103	76 - 25
	5 - 3
	46 - 26
	64 - 19
	64 - 30
08310-22063	65 - 7
	67 - 20
	74 - 38
	75 - 38
	47 - 41
08310-22086	131 - 19
	132 - 17
	133 - 17
	134 - 17
	135 - 17
	136 - 17
	137 - 36
	140 - 12
08310-22103	64 - 31
08310-22106	59 - 12
08313-11063	59 - 14
08313-11066	93 - 8
08313-11067	107 - 18
08313-11085	109 - 13
	137 - 39

PART NO.	FIG.NO.-REF.NO.
08313-21085	125 - 20
	126 - 23
	127 - 23
08314-41123	74 - 13
	74 - 24
	75 - 13
	75 - 24
08316-16046	105 - 16
	105 - 16
08316-16063	8 - 13
	15 - 13
	15 - 18
	16 - 21
	16 - 26
	17 - 21
	17 - 26
	26 - 5
	27 - 5
08316-16064	63 - 18
08316-16066	63 - 6
	101 - 8
	142 - 66
	142 - 66
	142 - 66
	142 - 66
08316-16083	9 - 10
	10 - 10
	23 - 5
	24 - 5
	37 - 14
08316-16086	49 - 36
	10 - 4
	72 - 6
	73 - 4
	102 - 37
08316-16088	142 - 74
	142 - 74
08316-16103	39 - 26
08316-16123	85 - 49
08316-26056	102 - 12
08316-26066	103 - 10
	112 - 17
	119 - 12
08316-26068	121 - 16
08316-26083	49 - 33
08316-26086	100 - 36
08316-26106	77 - 17
08319-21123	74 - 9
08321-21038	102 - 22
08321-21046	13 - 10
08321-21053	13 - 20
08321-21056	69 - 5
	13 - 5
	13 - 27
	13 - 57
08321-21063	13 - 64
	4 - 3
	4 - 5
	26 - 11
	27 - 10
	27 - 13
	49 - 29
	68 - 15
	80 - 25
	80 - 25
	80 - 25
	81 - 25
	81 - 25
	81 - 31
	84 - 11
	85 - 20
	86 - 44
	121 - 3
	121 - 25
08321-21064	15 - 10
	16 - 10
	17 - 10
08321-21066	13 - 13
	13 - 51
	57 - 25
	63 - 11
	76 - 8
	77 - 9
	118 - 5
	118 - 14
	125 - 28
	126 - 31
	127 - 31
	138 - 23
08321-21067	87 - 17
08321-21083	88 - 5
	88 - 17
	93 - 12
	93 - 27
	118 - 19
	5 - 14
	5 - 18
	5 - 20
	29 - 5
	30 - 5
	37 - 3
	40 - 10
	41 - 13
	46 - 5
	46 - 18
	49 - 39
	50 - 16
	51 - 16
	64 - 6
	65 - 6
08321-21086	84 - 14
	84 - 23
	43 - 29
	48 - 5
	48 - 23
	58 - 31
	72 - 3
	76 - 11
	76 - 24
	77 - 12
	85 - 39
	86 - 36
	120 - 5
	125 - 12
	125 - 31
	126 - 12
	127 - 12
	127 - 34
	139 - 12
	140 - 21
08321-21088	138 - 16
08321-21103	85 - 17
	86 - 17
	106 - 10
08321-21106	125 - 15

PART NO.	FIG.NO.-REF.NO.
08321-21106	126 - 15
	127 - 15
08321-21107	128 - 16
	129 - 14
	130 - 14
	131 - 21
	132 - 19
	133 - 19
	134 - 19
	135 - 19
	136 - 19
	137 - 38
	138 - 12
08321-21123	85 - 48
08321-21208	74 - 3
08321-31063	83 - 16
	84 - 4
08321-31066	13 - 15
08321-31083	43 - 14
	44 - 17
	66 - 16
	66 - 24
	72 - 24
	74 - 30
	75 - 30
08321-31086	72 - 20
	73 - 18
	73 - 22
08321-31103	5 - 2
	5 - 7
	5 - 10
	46 - 25
	64 - 18
	65 - 8
	67 - 19
	74 - 37
	75 - 37
	82 - 20
	122 - 3
	123 - 3
	124 - 3
08321-31106	85 - 28
	86 - 25
08321-31123	64 - 12
	64 - 23

PART NO.	FIG.NO.-REF.NO.
	65 - 9
	67 - 9
	67 - 13
	74 - 8
	74 - 34
	75 - 8
	75 - 34
	82 - 17
08321-31126	43 - 12
	68 - 9
	72 - 15
	73 - 13
08322-11083	5 - 15
	46 - 6
	46 - 19
08322-11086	72 - 4
	76 - 12
	76 - 23
	77 - 13
	85 - 40
	86 - 37
	120 - 6
	125 - 32
	126 - 35
	127 - 35
	140 - 22
08322-11088	138 - 17
	138 - 19
08322-11106	77 - 16
08322-21047	105 - 15
	105 - 15
08322-21053	91 - 21
	92 - 22
	111 - 7
08322-21056	53 - 24
	54 - 25
	57 - 11
	57 - 16
	58 - 11
	58 - 34
08322-21057	58 - 27
	63 - 4
	102 - 9
08322-21063	18 - 9
	19 - 10

PART NO.	FIG.NO.-REF.NO.
	20 - 10
	26 - 12
	81 - 32
	112 - 31
	120 - 15
	121 - 4
08322-21064	15 - 11
	16 - 11
	17 - 11
	87 - 40
	99 - 6
	110 - 71
08322-21066	103 - 3
	103 - 9
	125 - 29
	126 - 32
	126 - 34
	127 - 32
	142 - 70
	142 - 70
08322-21067	93 - 13
	118 - 20
08322-21086	103 - 5
	131 - 18
	132 - 16
	133 - 16
	134 - 16
	135 - 16
	136 - 16
	137 - 35
	139 - 13
	140 - 13
08322-21103	106 - 11
08322-21123	74 - 33
	75 - 33
08322-21163	64 - 32
	67 - 23
08323-31066	111 - 10
08323-31068	119 - 3
08331-21479	47 - 13
08331-31266	66 - 4
08331-41159	25 - 9
08331-41256	42 - 3
	42 - 8
	42 - 15

PART NO.	FIG.NO.-REF.NO.
08332-11046	128 - 6
	129 - 6
	130 - 6
	131 - 6
	132 - 6
	135 - 6
	136 - 6
	137 - 12
	138 - 9
	139 - 6
	140 - 5
08332-11049	133 - 6
	134 - 6
08332-11058	119 - 19
	121 - 13
08332-11088	137 - 22
08332-11106	40 - 11
	45 - 5
08341-31059	6 - 14
08351-21008	42 - 10
	42 - 17
08361-25063	110 - 72
09100-06055	76 - 3
	76 - 26
	77 - 3
	77 - 26
09100-06075	93 - 5
09100-06116	4 - 2
09100-06130	77 - 4
09100-08167	120 - 4
09100-08184	73 - 17
09100-08218	73 - 21
09100-08226	50 - 15
	51 - 15
09100-08253	70 - 9
	70 - 12
09100-08270	42 - 20
09100-10023	82 - 19
09100-10056	77 - 15
09100-10168	85 - 29
	86 - 26
09100-12015	94 - 53
	104 - 14
09100-12025	64 - 21
	67 - 12

PART NO.	FIG.NO.-REF.NO.
09100-12041	65 - 10
09100-12111	82 - 16
09103-06066	26 - 3
	27 - 3
09103-06089	122 - 15
	123 - 15
	124 - 14
09103-08030	43 - 24
09103-08130	39 - 7
09103-08131	39 - 3
09103-08132	39 - 16
09103-08231	9 - 4
09103-10028	43 - 22
09103-10067	3 - 2
09103-10068	6 - 19
09103-12008	6 - 12
09103-12020	141 - 16
09107-08005	49 - 32
09108-06056	8 - 11
09111-06009	138 - 18
09111-08044	128 - 15
	129 - 13
	130 - 13
	131 - 20
	132 - 18
	133 - 18
	134 - 18
	135 - 18
	136 - 18
09111-08045	138 - 11
09111-08066	72 - 23
	73 - 21
09111-12009	43 - 11
09115-06001	56 - 9
09116-10118	2 - 7
09119-06017	129 - 23
	130 - 23
	132 - 26
	134 - 26
	136 - 26
09119-06045	103 - 2
09119-10041	21 - 4
	22 - 4
09119-12003	68 - 8
09119-12005	66 - 8

PART NO.	FIG.NO.-REF.NO.
09119-12007	68 - 12
09125-06022	89 - 18
	91 - 23
09125-06041	94 - 60
	96 - 40
	117 - 17
09125-06055	110 - 62
09125-06060	94 - 39
	98 - 7
09125-06073	94 - 44
09125-06075	87 - 11
	87 - 14
	87 - 19
	87 - 31
09125-08002	93 - 3
	117 - 7
	120 - 7
09125-08004	76 - 13
	77 - 14
09125-08005	73 - 2
09125-08007	98 - 3
09125-08010	112 - 38
09125-08011	94 - 41
	94 - 54
	98 - 26
	98 - 29
	98 - 29
	103 - 4
	104 - 13
	106 - 2
09128-06023	110 - 70
09128-06031	88 - 18
09128-06032	41 - 10
	44 - 47
09128-06045	84 - 21
09128-06049	84 - 17
09128-10002	41 - 9
09129-06002	52 - 6
	58 - 14
09132-05023	110 - 60
	110 - 61
09132-05029	91 - 20
	92 - 21
09132-05031	141 - 15
09132-06006	23 - 28

PART NO.	FIG.NO.-REF.NO.
09132-06006	23 - 28
	24 - 30
	24 - 30
	80 - 16
	81 - 35
09135-08006	40 - 9
	41 - 12
09137-08004	119 - 8
09137-08006	93 - 22
	121 - 20
09139-06038	110 - 68
09140-12022	72 - 16
	73 - 14
09140-12024	73 - 14
09140-12026	70 - 5
	106 - 5
09140-16007	80 - 10
	81 - 12
09148-03003	87 - 37
09148-05005	53 - 19
	54 - 20
09148-05013	53 - 21
	54 - 22
	91 - 18
	92 - 19
	99 - 22
	100 - 3
	100 - 15
	100 - 26
	100 - 39
09148-05022	87 - 35
09148-06003	87 - 15
09148-06005	137 - 24
09148-06006	24 - 9
09150-06010	18 - 12
09159-04002	56 - 20
09159-04004	100 - 33
09159-06036	88 - 8
09159-06049	107 - 33
09159-07004	7 - 8
09159-08022	21 - 11
	22 - 12
09159-08033	6 - 5
09159-08052	78 - 33
	79 - 32
09159-08068	42 - 21
09159-10060	85 - 30
	86 - 27
09159-12009	106 - 4
	106 - 13
09159-12024	70 - 6
	106 - 3
	106 - 12
09159-16003	47 - 17
09159-20003	43 - 9
09160-05013	52 - 14
09160-05034	72 - 12
	73 - 10
09160-06003	87 - 20
09160-06019	57 - 26
	63 - 12
	87 - 18
	88 - 6
	138 - 24
09160-06020	129 - 24
	130 - 24
	132 - 27
	134 - 27
	136 - 27
09160-06027	8 - 21
	31 - 3
	32 - 3
	34 - 3
	35 - 3
	92 - 30
09160-06028	88 - 19
09160-06039	110 - 64
	112 - 24
	112 - 28
	112 - 44
09160-06057	8 - 12
09160-06074	99 - 3
09160-06077	84 - 18
	91 - 11
09160-06086	33 - 30
09160-08030	49 - 40
09160-08075	33 - 42
	35 - 17
09160-08080	50 - 17
	51 - 17
09160-08086	117 - 8
09160-10001	5 - 11
	122 - 4
	123 - 4
	124 - 4
09160-10002	85 - 26
	86 - 23
09160-10039	3 - 3
09160-10078	74 - 36
	75 - 36
09160-10094	85 - 31
	86 - 28
09160-12043	8 - 3
09160-12073	64 - 33
	67 - 24
09160-16006	47 - 16
09160-20056	43 - 8
09160-23007	59 - 26
09160-35002	43 - 30
09160-35003	43 - 30
09160-35004	43 - 30
09160-35006	43 - 30
09161-04008	119 - 17
	121 - 11
09161-04011	107 - 23
	108 - 6
	109 - 6
09161-06008	91 - 24
	119 - 18
	121 - 12
09161-08006	88 - 9
09161-08011	110 - 69
09161-10009	80 - 9
	81 - 11
09164-07001	128 - 5
	129 - 5
	130 - 5
	131 - 5
	132 - 5
	133 - 5
	134 - 5
	135 - 5
	136 - 5
	137 - 11
	138 - 8

PART NO.	FIG.NO.-REF.NO.
09164-07001	139 - 4
	140 - 3
09164-15006	43 - 20
09164-24003	41 - 20
09165-10002	64 - 29
09166-16014	38 - 48
09166-25009	38 - 18
09166-30007	38 - 9
09168-08015	39 - 22
09168-10002	47 - 24
09168-12007	33 - 18
09168-14012	4 - 8
09168-20001	69 - 10
09169-06057	15 - 17
	16 - 25
	17 - 25
09169-15002	64 - 28
09180-06027	110 - 23
09180-06106	8 - 22
	31 - 4
	32 - 4
	33 - 31
	34 - 4
	35 - 4
09180-08007	72 - 18
	73 - 16
09180-08057	21 - 17
	22 - 16
09180-08092	33 - 43
	35 - 18
09180-10018	77 - 24
09180-10097	77 - 20
09180-12035	64 - 22
09181-35012	43 - 4
09181-35013	43 - 4
09181-35014	43 - 4
09181-35015	43 - 4
09181-35016	43 - 4
09181-35017	43 - 4
09181-35018	43 - 4
09181-35019	43 - 4
09181-35020	43 - 4
09181-35021	43 - 4
09181-35022	43 - 4
09181-35023	43 - 4
09200-08059	84 - 20
09200-10010	78 - 34
	79 - 33
09202-05027	8 - 4
09205-03019	37 - 7
09205-04001	45 - 7
	47 - 34
09205-04003	45 - 6
	47 - 30
09205-05012	40 - 15
09206-13001	2 - 8
	39 - 29
09206-13011	39 - 2
	39 - 15
09208-06001	128 - 4
	129 - 4
	130 - 4
	131 - 4
	132 - 4
	133 - 4
	134 - 4
	135 - 4
	136 - 4
	137 - 10
	139 - 5
	140 - 4
09208-06003	138 - 7
09209-05016	93 - 10
	119 - 5
	121 - 8
09209-13018	18 - 11
09241-08003	41 - 11
09241-12002	2 - 4
09241-20002	2 - 5
09241-22003	37 - 9
09246-04002	9 - 8
	10 - 8
09246-05003	3 - 4
09246-06001	3 - 6
09246-06002	3 - 5
09246-08002	3 - 7
09246-16009	39 - 19
	69 - 11
09246-16010	39 - 20
	69 - 12
09247-10001	47 - 23
09247-14027	4 - 7
09247-20001	69 - 9
09250-02001	89 - 19
09250-06004	113 - 10
	114 - 14
	116 - 11
09250-06010	91 - 37
09250-08007	94 - 62
09250-08015	91 - 35
09250-10006	40 - 17
09250-10017	141 - 17
09250-14003	89 - 20
09250-14006	93 - 18
09250-14008	59 - 30
09250-16006	141 - 18
09250-20011	90 - 18
09250-20015	90 - 13
	90 - 15
09250-25007	90 - 14
09250-26005	39 - 8
09250-30002	90 - 12
09250-40002	90 - 11
	92 - 31
09250-40004	91 - 31
09251-09002	76 - 5
	77 - 6
09261-03015	40 - 16
	40 - 16
09261-06003	38 - 46
09262-17023	47 - 9
09262-20073	38 - 30
09262-20079	47 - 12
09262-25073	38 - 22
09262-28005	38 - 3
09262-28006	38 - 29
09262-28015	38 - 27
09262-30072	38 - 20
09262-35036	68 - 3
09263-20056	38 - 2
09263-25033	47 - 6
09263-28021	38 - 19
09263-30031	38 - 16
09263-35015	38 - 12
	38 - 14

PART NO.	FIG.NO.-REF.NO.
09263-35015	38 - 52
09265-15002	66 - 22
09265-30002	43 - 5
09265-35002	43 - 6
09265-41001	66 - 10
09265-45002	43 - 25
09269-33001	37 - 5
09280-10005	4 - 15
09280-11002	39 - 10
	39 - 13
	46 - 28
09280-14009	4 - 11
09280-19006	44 - 46
09280-28006	29 - 7
	30 - 7
09280-56004	1 - 6
	2 - 15
09283-25077	38 - 6
09283-26016	66 - 3
09283-28010	47 - 14
09283-32022	7 - 2
09283-32026	6 - 10
09283-40013	43 - 7
09283-48007	68 - 6
09283-50002	66 - 9
09283-68001	6 - 21
09284-14003	37 - 8
09285-00002	66 - 26
09285-12005	47 - 32
09289-07005	7 - 16
09300-14012	37 - 11
09300-17008	47 - 5
09300-30003	38 - 11
	38 - 51
09305-07003	122 - 16
	123 - 16
	124 - 15
09305-13002	64 - 14
	67 - 15
09306-14004	76 - 20
09308-05011	58 - 46
09308-06003	58 - 45
09308-07009	58 - 51
09308-08007	56 - 8
09308-09017	88 - 11
09308-10004	8 - 23
	31 - 5
	32 - 5
	33 - 32
	34 - 5
	35 - 5
09308-11006	58 - 54
09308-14006	59 - 18
	87 - 44
09319-12023	67 - 11
09320-06001	139 - 7
09320-06006	89 - 10
	106 - 6
	106 - 14
	128 - 7
09320-06011	88 - 14
09320-06014	129 - 7
	130 - 7
	133 - 7
	134 - 7
	135 - 7
	137 - 13
	140 - 6
09320-06015	128 - 9
	131 - 9
09320-09034	15 - 16
	16 - 24
	17 - 24
09320-10024	64 - 27
09320-12011	33 - 44
	35 - 19
09320-16006	64 - 26
	67 - 22
09321-06016	138 - 2
09329-07002	33 - 16
09343-03020	32 - 9
	32 - 11
	33 - 25
09343-03032	34 - 13
09343-03035	33 - 10
	33 - 36
	34 - 12
09343-03044	31 - 7
	34 - 11
	35 - 7
09343-03079	32 - 13
09343-03087	12 - 65
	16 - 17
	32 - 7
	32 - 19
	33 - 13
	35 - 14
09343-03088	32 - 14
	32 - 16
	34 - 10
	35 - 11
09343-03089	11 - 45
	12 - 56
	14 - 61
	17 - 17
09343-03090	31 - 6
	32 - 6
	32 - 17
	35 - 6
	35 - 12
09343-03091	33 - 11
	33 - 27
09343-03093	33 - 39
09343-03097	33 - 35
09343-03100	17 - 18
09343-03101	16 - 18
09343-03103	16 - 19
	17 - 19
	33 - 14
09343-03114	31 - 8
	32 - 20
	34 - 14
	35 - 8
09343-05044	124 - 20
09343-07050	23 - 11
	23 - 12
	24 - 12
09343-11016	122 - 17
	123 - 17
	124 - 16
09344-05014	123 - 20
	123 - 21
09344-05036	122 - 19
09351-75111-180	28 - 6
09352-50823-890	124 - 23

PART NO.	FIG.NO.-REF.NO.
09352-50823-890	124 - 25
09352-70121-13A	28 - 9
	28 - 10
09354-35753-15A	33 - 48
09354-35753-250	35 - 20
09354-70153-285	10 - 17
09356-42115-150	23 - 20
	24 - 22
09356-76145-150	24 - 14
09358-35754-260	33 - 9
09360-10026	80 - 8
	81 - 10
09367-04002	13 - 81
	32 - 10
	33 - 12
09367-14003	9 - 21
	10 - 19
09380-25011	38 - 23
09380-26003	66 - 35
09380-28007	38 - 5
	38 - 24
	38 - 28
09383-13001	80 - 26
	81 - 26
09385-08004	84 - 25
09385-12001	84 - 6
09387-19001	125 - 33
	126 - 36
	127 - 36
	128 - 28
	129 - 25
	130 - 25
	131 - 33
	132 - 28
	133 - 31
	134 - 28
	135 - 31
	136 - 28
	137 - 53
09388-00017	38 - 35
09388-00019	38 - 39
	38 - 40
09390-62010	38 - 21
09390-68002	38 - 4
09400-19302	78 - 35
	79 - 34
09400-22312	29 - 18
	30 - 11
09400-36311	29 - 14
	30 - 14
09400-53301	122 - 9
	123 - 8
	124 - 8
09400-60301	122 - 8
	123 - 7
	124 - 7
09401-08402	122 - 20
	123 - 22
	124 - 26
09401-10404	23 - 17
	23 - 21
	24 - 19
	24 - 23
09401-11402	124 - 27
09401-11405	23 - 14
	24 - 17
09401-11407	33 - 46
09401-12404	9 - 14
	10 - 15
	29 - 10
	30 - 10
09401-12405	9 - 15
09401-12407	24 - 15
09401-13406	9 - 20
	10 - 18
09401-13407	23 - 15
	24 - 13
09401-15402	124 - 17
09401-16301	122 - 18
	123 - 18
	124 - 17
09401-18304	9 - 24
	10 - 22
09401-20402	29 - 21
	30 - 21
09401-27401	74 - 12
	74 - 17
	74 - 21
	75 - 12
	75 - 17
09401-50402	45 - 17
09402-26601	103 - 7
09402-68202	15 - 20
	17 - 28
09402-70207	15 - 7
	16 - 7
	17 - 7
09402-70501	124 - 7
09402-82202	15 - 21
	16 - 29
	17 - 29
09403-05302	81 - 36
09403-06401	80 - 22
	81 - 33
09403-06403	128 - 23
	129 - 21
	130 - 21
	131 - 25
	132 - 23
	133 - 23
	134 - 23
	135 - 23
	136 - 23
	137 - 45
	140 - 17
09403-06404	80 - 23
	81 - 34
09403-07312	80 - 21
	80 - 21
	80 - 21
	81 - 23
	81 - 23
09403-08309	23 - 26
	23 - 26
	24 - 28
	24 - 28
09403-08313	88 - 12
09403-09309	87 - 43
09403-12310	18 - 17
09403-16306	58 - 16
09403-23401	123 - 23
09403-48401	15 - 24
	16 - 35
	17 - 32

PART NO.	FIG.NO.-REF.NO.
09403-51407	23 - 7
09404-06401	58 - 52
	122 - 21
09404-06402	59 - 19
09404-06404	9 - 16
	9 - 25
	10 - 23
	58 - 17
	59 - 47
09404-06405	58 - 18
	58 - 18
	58 - 21
09404-08402	39 - 11
	58 - 24
09404-08404	23 - 23
	24 - 25
09404-08413	46 - 29
09405-00918	58 - 53
09407-10402	52 - 7
09408-00012	52 - 8
	58 - 23
09408-00013	124 - 28
09408-00031	47 - 44
09408-00033	33 - 38
	34 - 15
	142 - 33
	142 - 33
09408-00034	33 - 15
	142 - 34
09408-00036	107 - 13
09408-00049	18 - 5
09408-00050	124 - 24
09408-00056	33 - 49
09408-00060	31 - 9
	32 - 21
	33 - 37
	34 - 17
	35 - 9
09408-00067	33 - 50
	34 - 16
	35 - 21
09408-00069	35 - 22
09408-00081	33 - 47
09408-00083	23 - 25
	24 - 27

PART NO.	FIG.NO.-REF.NO.
09408-00085	18 - 6
09408-00090	23 - 24
	24 - 26
09409-05304	94 - 47
	98 - 14
09409-06309-4GF	97 - 25
09409-06312-281	93 - 34
09409-06312-5CW	93 - 34
09409-07306	94 - 68
	96 - 48
09409-07310	94 - 69
	96 - 48
09409-07311	87 - 24
	91 - 19
	92 - 20
09409-07312	87 - 49
	94 - 33
	95 - 32
	96 - 36
09409-08303-281	105 - 10
09409-08309	117 - 15
09409-09303	92 - 27
	92 - 32
09409-10301-5CW	100 - 4
09409-10301-5ES	100 - 4
09409-10302-4GF	112 - 15
	112 - 47
09409-10303-281	105 - 11
	112 - 50
09409-10303-5CW	105 - 11
	112 - 50
09409-12301-281	93 - 33
	93 - 35
09409-12301-5CW	93 - 33
	93 - 35
09410-00067	113 - 9
	114 - 13
	115 - 7
	115 - 7
	116 - 10
09410-00073	131 - 31
	133 - 29
	135 - 29
09422-05011	38 - 43
09422-05012	38 - 44

PART NO.	FIG.NO.-REF.NO.
09440-04019	41 - 7
09440-07005	41 - 8
09440-08026	18 - 10
09440-09019	40 - 18
09440-11005	41 - 5
09440-12004	69 - 7
09440-14017	47 - 39
09440-20011	47 - 31
09440-27007	88 - 21
09443-11008	138 - 10
09448-18016	40 - 13
09448-18017	40 - 14
09448-20006	37 - 10
09448-21003	76 - 2
	77 - 2
09448-29004	77 - 25
09448-30010	76 - 21
09448-31029	77 - 21
09448-31030	76 - 16
09462-00040	107 - 25
09471-12028	53 - 9
	54 - 10
09471-12045	56 - 6
	57 - 8
09471-12046	57 - 9
09471-12048	55 - 9
09471-12049	55 - 9
09471-12055	53 - 11
	53 - 11
	53 - 11
	53 - 11
	53 - 11
	54 - 12
	54 - 12
	54 - 12
	54 - 12
09471-12056	56 - 6
	57 - 8
09471-12057	57 - 9
09471-12058	56 - 7
09471-12059	56 - 7
09471-12064	57 - 18
09471-12073	59 - 3
09471-12076	56 - 14

PART NO.	FIG.NO.-REF.NO.
09471-12076	57 - 13
09471-12079	56 - 19
09471-12081	57 - 13
09481-05101	58 - 7
09481-10101	58 - 3
	58 - 8
09481-15101	58 - 4
	58 - 9
09482-00123	2 - 13
09482-00131	2 - 13
09482-00155	2 - 13
09482-00167	2 - 13
09482-00377	2 - 13
09491-21021	11 - 5
	12 - 5
	14 - 5
09491-28013	13 - 31
09491-60008	11 - 7
	12 - 7
	14 - 7
09491-85009	13 - 30
09491-95009	11 - 4
	12 - 4
09492-20017	13 - 34
09492-53001	13 - 37
09800-53800	87 - 45
09824-00035	87 - 42
09824-00036	87 - 41

SUZUKI MOTOR CO.,LTD.

Head Office: Hamamatsu-Nishi, P.O.Box1,
432-91 Hamamatsu,Japan

SUZUKI SJ413-4 PARTS CATALOGUE

1st Edition
Printed in Nov., 1987
Published in Nov., 1987
Reprint in Apr., 1988

Editor : SUZUKI MOTOR CO.,LTD.
Export parts section

Reprint Prohibited Ⓢ